X34L



Color: Bronze

Weight: 5.8 lbs

Project:	Type:
Prepared By:	**Date:**

Driver Info

Type	Constant Current
120V	0.78A/0.69A/0.59A
208V	0.44A/0.40A/0.34A
240V	0.38A/0.34A/0.30A
277V	0.35A/0.31A/0.27A
Input Watts	68.1-93.6W

LED Info

Watts	90/80/70W
Color Temp	3000K/4000K/5000K
Color Accuracy	83-86 CRI
L70 Lifespan	100,000 Hours
Lumens	10,313-14,040 lm
Efficacy	136.8-163.6 lm/W

Technical Specifications

Field Adjustability

Field Adjustable:
Field Adjustable Light Output:
90W/80W/70W (factory default 90W)
Color temperature selectable 3000K, 4000K and 5000K (factory default 4000K)

Compliance

UL Listed:
Suitable for wet locations

IESNA LM-79 & LM-80 Testing:
RAB LED luminaires and LED components have been tested by an independent laboratory in accordance with IESNA LM-79 and LM-80.

IP Rating:
Ingress protection rating of IP65 for dust and water

Trade Agreements Act Compliant:
This product is a product of Cambodia and a "designated country" end product that complies with the Trade Agreements Act

DLC Listed:
This product is listed by Design Lights Consortium (DLC) as an ultra-efficient premium product that qualifies for the highest tier of rebates from DLC Member Utilities. Designed to meet DLC 5.1 requirements.
DLC Product Code: S-EZPO0W

Electrical

Driver:
Constant Current, Class 1, 120-277V, 50/60 Hz
90W: 120V: 0.78A 208V: 0.44A, 240V: 0.38A, 277V: 0.35A
80W: 120V: 0.69A 208V: 0.40A, 240V: 0.34A, 277V: 0.31A
70W: 120V: 0.59A 208V: 0.34A, 240V: 0.30A, 277V: 0.27A

Dimming Driver:
Driver includes dimming control wiring for 0-10V dimming systems. Requires separate 0-10V DC dimming circuit. Dims down to 10%.

THD:
90W: 3.9% at 120V, 6.6% at 277V
80W: 4.0% at 120V, 7.9% at 277V
70W: 4.3% at 120V, 10.0% at 277V

Power Factor:
90W: 99.7% at 120V, 93.9% at 277V
80W: 99.6% at 120V, 92.7% at 277V
70W: 99.5% at 120V, 90.9% at 277V

Photocell:
Integrated photocell included with on/off switch

Optical

NEMA Type:
NEMA Beam Spread of 7H x 7V

LED Characteristics

LEDs:
Long-life, high-efficacy, surface-mount LEDs

Color Uniformity:
RAB's range of Correlated Color Temperature follows the guidelines of the American National Standard for Specifications for the Chromaticity of Solid State Lighting (SSL) Products, ANSI C78.377-2017.

Performance

Lifespan:
100,000-Hour LED lifespan based on IES LM-80 results and TM-21 calculations

Wattage Equivalency:
90W: Replaces up to 400W Metal Halide (MH) or 310W High Pressure Sodium (HPS)
80W: Replaces up to 400W Metal Halide (MH) or 310W High Pressure Sodium (HPS)
70W: Replaces up to 350W Metal Halide (MH) or 250W High Pressure Sodium (HPS)

Construction

Cold Weather Starting:
The minimum starting temperature is -40°C (-40°F)

Maximum Ambient Temperature:
Suitable for use in up to 40°C (104°F)

Copyright © 2024 RAB Lighting All Rights Reserved Note: Specifications are subject to change at any time without notice

Technical Specifications (continued)

Housing:
Die-cast aluminum

Mounting:
Slipfitter with tilt angle in 10° increments

Tilt Increment:
-90° to +90°

Lens:
Tempered glass

Reflector:
Polyethylene Terephthalate (PET)

Effective Projected Area:
EPA = 0.06

Finish:
Formulated for high durability and long-lasting color

Green Technology:
Mercury and UV free. RoHS-compliant components.

Other

Note:
All values are typical (tolerance +/- 10%)

5 Yr Limited Warranty:
The RAB 5-year, limited warranty covers light output, driver performance and paint finish. RAB's warranty is subject to all terms and conditions found at rablighting.com/warranty.

Buy American Act Compliance:
RAB values USA manufacturing! Upon request, RAB may be able to manufacture this product to be compliant with the Buy American Act (BAA). Please contact customer service to request a quote for the product to be made BAA compliant.

Copyright © 2024 RAB Lighting All Rights Reserved Note: Specifications are subject to change at any time without notice

Dimensions

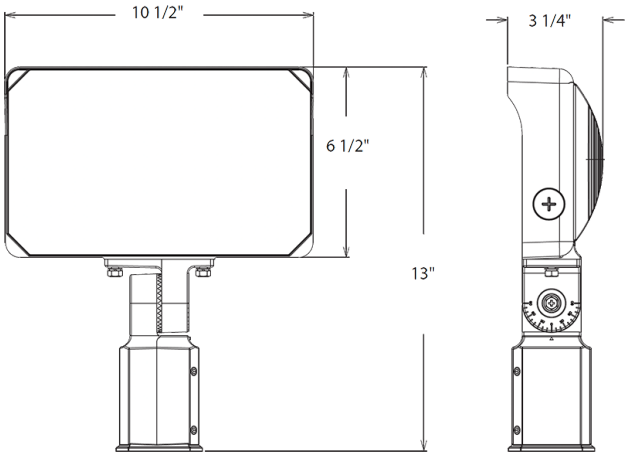

Features

- 100,000-Hour LED lifespan
- IP65 Rated
- 5-Year, limited warranty

Ordering Matrix

Family	Wattages	Mounting	Color Temp	Finish	Driver	Options
X34	L					
	L = 90/80/70W **XL =** 130/110/95W **XXL =** 160/140/120W	**Blank =** Slipfitter **T =** Trunnion	**Blank =** 3000K/4000K/5000K CCT Adjustable	**Blank =** Bronze **W =** White	**Blank =** 120-277V, 0-10V Dimming	**Blank =** Selectable On/Off Photocell

Copyright © 2024 RAB Lighting All Rights Reserved Note: Specifications are subject to change at any time without notice