42LYF056

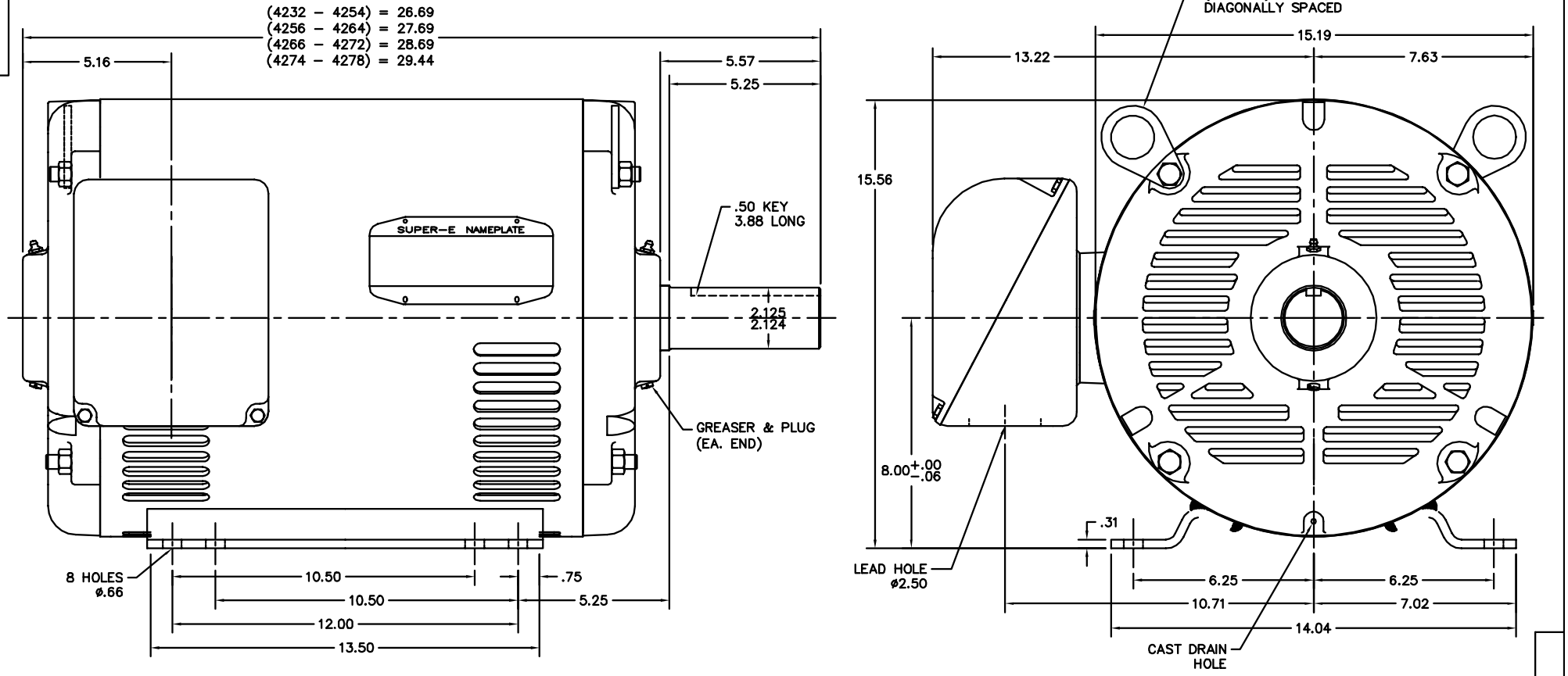

42LYF056

CUSTOMER IS RESPONSIBLE FOR DETERMINING THAT BALDOR'S PRODUCT WILL PERFORM SUITABLY IN THE INTENDED APPLICATION.

REV. DESC: UPDATED DESCRIPTION		
REV. LTR: H	VERSION: 04	TDR: 000000855149
FILE: \AAA\00036\859	REVISED: 10:09:06 05/23/2014	BY: ENNINDO
MTL: –		

BALDOR

HORZ OPSB 324–6T, SUPER–E

SH 1 of 1