General Engineering Information

CES

- **Drive Installation & Alignment**
- **Sprocket Diameter Calculation**
- **Materials**
- **Use of Flanged Sprockets**
- **Fixed Centers Drives**
- **Teeth In Mesh**
- **Belt Pull & Bearing Loads**
- **Idler Use**
- **Troubleshooting Guide**

Below are some terms and abbreviations used on the following pages.

HP	=	Horsepower
DHP	=	Design Horsepower
RPM	=	Revolutions Per Minute
D	=	Large Diameter Wheel
Ac	=	Arc Correction Factor
Lc	=	Length Correction Factor
C	=	Center Distance
d	=	Small Diameter Wheel

Installation

Align Sprockets

Sprocket alignment and parallelism of the shafts is very important. Proper alignment helps to equalize the load across the entire belt width, thereby reducing wear and extending belt life. The sketches below show how to align a Synchronous drive properly. **PLACE A STRAIGHTEDGE** against the outside edge of the sprockets as shown in Figure 6; Figure 7 shows the four points where the straightedge should touch the sprockets.

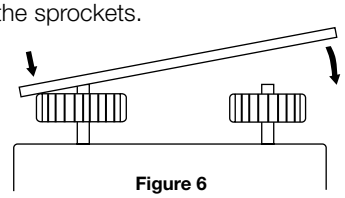

Figure 6

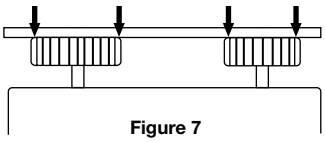

Figure 7

The straightedge should cross the sprockets at the widest possible part. (See Figure 8.) **OR USE A STRING.** Tie a string around either shaft (Figure 9) and pull it around and across the outer edge of both sprockets. Figure 10 shows how the string should touch four points when the drive is properly aligned. After aligning the sprockets, check the rigidity of the supporting framework. Shafts should be well supported to prevent distortion and a resulting change in the center distance under load. Do not use spring-loaded or weighted idlers. Idler sprockets or pulleys must be locked into position after adjusting belt tension. **Please note: At least one sprocket must have a flange.**

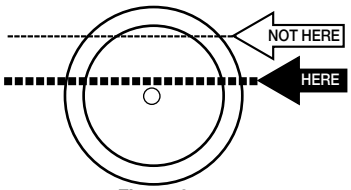

Figure 8

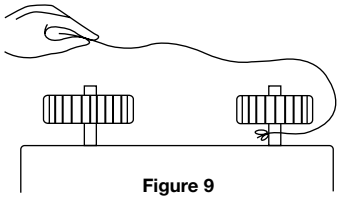

Figure 9

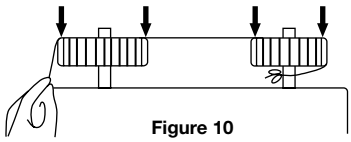

Figure 10

Install Belt

Do not pry or otherwise force the belt onto the sprockets, as this can result in permanent damage to the belt. Either remove the sprocket's outside flange or reduce the center distance between the sprockets so that the belt can be easily installed.

Belt Tensioning – General Method

This method of tensioning Synchronous belts should satisfy most drive requirements.

Step 1. Reduce the center distance so that the belt can be placed onto the sprockets without forcing or prying it over the flanges.

Step 2. Increase the belt tension until the belt feels snug or taut. Avoid over-tensioning the belt.

Step 3. Start the drive and apply the most severe load condition. This may be either the motor starting torque or during the work cycle. A belt that is too loose will "jump teeth" under the most severe load condition. When this occurs, gradually increase the belt tension until satisfactory operation is achieved.

Belt Tensioning – Force Deflection Method

A numerical method can be used to properly tension the belt on a Synchronous drive. This procedure, commonly referred to as the Force Deflection Method, consists of measuring the pounds of force required to deflect the belt a given amount.

Step 1. Install the belt as per Steps 1 and 2 of the General Method. Measure the span length (in inches) as illustrated in Figure 11.

Step 2. From Figure 11 determine the deflection height required for the drive. The deflection height is always 1/64" per inch of span length. For example, a 32" span length requires a deflection of 32/64" or 1/2". To measure the deflection height place a straightedge from sprocket to sprocket on top of the belt or wrap a string or steel tape around the sprockets on top of the belt. This will serve as a reference line to measure deflection inches.

Step 3. Using the formula at right, calculate the minimum and maximum force values (lbs.).

Step 4. Using a spring scale, apply a perpendicular force to the belt at the mid-point of the span as illustrated in Figure 1. NOTE: For belts wider than 2 inches, it is suggested that a rigid piece of keystock or something similar be placed across the belt between the point of force and the belt to prevent belt distortion. Compare this deflection force value to that found in Step 3. Adjust belt tension accordingly.

Actual belt installation tension required depends on peak loads, system rigidity, teeth in mesh, etc. In some instances it may be necessary to gradually increase the belt tension to achieve proper operation of the drive.

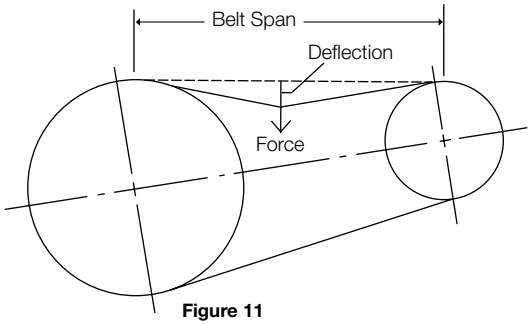

Figure 11

$$\text{Maximum Force} = \frac{4000 \times \text{DHP}}{\text{RPM} \times \text{Pitch Diameter}}$$

$$\text{Minimum Force} = \frac{5000 \times \text{BHP}}{\text{RPM} \times \text{Pitch Diameter}}$$

DHP = Belt Horsepower or Motor Horsepower x Recommended Service Factor

BHP = Brake Horsepower or Motor Horsepower

RPM = Speed of Fastest Shaft

Pitch Diameter = Diameter of Smallest Sprocket

Calculations

To determine the diameter of MTO sprockets with a number of teeth other than those listed in our stock offering.

Outside Diameter (mm) 5M RPP Plus = (1.5915 x NGR) – 1.140
Outside Diameter (mm) 8M RPP Plus = (2.5565 x NGR) – 1.372
Outside Diameter (mm) 14M RPP Plus = (4.4563 x NGR) – 2.794
Outside Diameter (mm) 20M RPP Plus = (6.3662 x NGR) – 4.320

Outside Diameter (mm) 8M QT Powerchain = (2.5433 x NGR) – 1.2427
Outside Diameter (mm) 14M QT Powerchain = (4.4541 x NGR) – 2.6627

NGR = Number of Grooves
To convert (mm) to Inches multiply by .03937

Materials

Cast Iron Maximum FPM = 6500
Ductile Iron Maximum FPM = 10,000

Flanged Sprockets

Due to the tracking characteristics, even on the best aligned drives, all synchronous belts have a tendency to move axially and will ride off the edge of the sprockets. In order to keep the belt on the sprocket, side flanges are needed.

On all synchronous drives the following conditions should be considered when selecting flanged sprockets.

1. Two Sprocket Drives: One sprocket must have flanges on both sides or both sprockets must have one flange but on opposite sides.
2. Long Center Drives: When the center distance is greater than or equal to eight times the small sprocket diameter, both sprockets should be flanged.
3. Vertical Shaft Drives: One sprocket should be flanged on both sides, all other sprockets in the drive system should have one flange on the bottom side.
4. Multiple Sprocket Drives: Every other sprocket should be flanged on both sides, one flange on each sprocket on alternating sides around the entire system.

Most smaller stock sprockets are flanged (80 tooth and smaller)

Fixed Centers (No Adjustment)

True fixed center applications are those where no provision for adjustment of driver or driven shaft exist. Fixed centers are not recommended for any synchronous belt drive other than motion transfer (low or no torque) drives. Fixed center drives imply need for exact tolerances. Although length tolerances for synchronous belts are considerably less than those for other belts, no belt can be manufactured without some tolerance. Sprocket manufacturing tolerances also contribute to the fixed center drive problem.

Fixed center applications prevent proper belt installation and tensioning procedures, reduced belt performance can result. The use of an idler can solve the problems associated with fixed center drives. See the page in this section concerning the use of idlers.

Teeth In Mesh

For a synchronous drive to transmit the full capacity of the belt, it is necessary to have a minimum of 6 teeth in mesh on the driver and all driven wheels in the drive. The two-wheel drives selected from our pre-engineered selection area of our catalog meet this requirement. For drives having less than 6 teeth in mesh, the horsepower of the drive should be multiplied by the proper correction factor.

Teeth in Mesh	Correction Factor
6	1.00
5	0.80
4	0.60
3	0.40
2	0.20

BELT PULL

The drive designer is often asked by the machine designer for the necessary information to calculate bearing loads. The portion of the bearing load induced by the belt drive is a combination of the sprocket weights and the belt pull. The weights can be found in the dimensional tables for the sprockets. To calculate the approximate belt pull, you will need the following:

1. FPM of the Drive
FPM = Pitch Diameter x RPM x .262

2. Design Horsepower
(Driver horsepower X Service factor)

3. Effective Pull = (Design HP x 33000) / FPM

Min. Belt Pull = 1.5 x Effective Belt Pull

Max. Belt Pull = 2.25 x Effective Belt Pull

Bearing Load Calculations

In order to find actual bearing loads, it is necessary to know weights of machine components and the value of all other forces contributing to the load. However, it is sometimes desired to know the bearing load contributed by the belt drive alone. You can find bearing load due to the drive if you know your bearing spacing with respect to the sheave center, and the belt pull as calculated above. To do this use the following formulas:

A. OVERHUNG SPROCKET

$$\text{Load at B, pounds} = \frac{\text{Belt Pull} \times (a + b)}{a}$$

$$\text{Load at A, pounds} = \text{Belt Pull} \times \frac{b}{a}$$

where: a and b = spacing, inches, per drawing at right

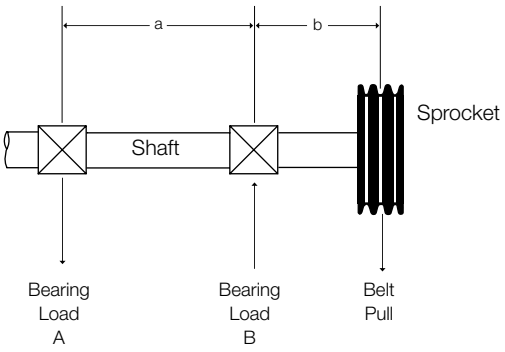

OVERHUNG SPROCKET

B. SPROCKET BETWEEN BEARINGS

$$\text{Load at D, pounds} = \frac{\text{Belt Pull} \times c}{(c + d)}$$

$$\text{Load at C, pounds} = \frac{\text{Belt Pull} \times d}{(c + d)}$$

where: c and d = spacing, inches, per drawing at right

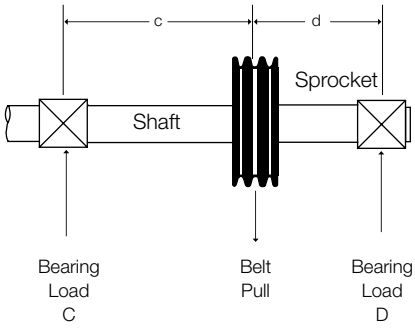

SPROCKET BETWEEN BEARINGS

Use Of Idlers - Synchronous & Timing Drives

Idlers are occasionally used in the design of synchronous belt drives for various reasons:

1. To provide take-up for fixed center drives.
2. To clear obstructions.
3. To subdue belt whip on long center drives.

NOTE: Do not use spring loaded or weighted idlers on synchronous drives.

Idlers should be avoided where possible because they either reduce the horsepower rating or shorten belt life. Idlers may be placed either outside or inside the drive. A common serious fault in designing drives is the use of idlers, which are too small. The use of such idlers introduces severe reverse ending stresses in the belt, resulting in drastically reduced belt life.

OUTSIDE IDLERS

An outside idler increases the number of teeth in mesh, but the amount of take-up, in the case of take-up idlers, will be limited by the belt on the opposite side of the drive. Outside idlers are always flat because they contact the top of the belt. Idlers should be located, if at all possible, on the slack side of the drive. A flat idler pulley, outside, should be located as close as possible to the preceding sprockets. This is because belts move back and forth slightly on a flat pulley and locating it as far away from the next sprocket minimizes the possibility of the belt entering that sprocket in a misaligned condition. Outside flat idlers should be one third larger than the smallest loaded synchronous sprocket. It should be remembered that the smallest loaded synchronous sprocket should not be smaller than the minimum pitch diameter recommended.

INSIDE IDLERS

An inside idler decreases the number of teeth in mesh on the adjacent sprockets. Inside idlers are usually synchronous sprockets. An inside idler sprocket may be located at any point along the span, preferably so that it gives nearly equal arcs of contact on the two adjacent sprockets. Inside idlers should be at least as large in diameter as the smallest loaded synchronous sprocket. Flat idlers may be used on the inside of a synchronous belt drive if the diameter of the flat pulley is as large as a sprocket which has 40 grooves or more.

IDLER MOUNTING

Mounting brackets for idlers should be sturdily constructed and meticulously aligned. It is frequently found that drive problems described as “belt stretch,” “belt instability,” “short belt life,” “belt roughness,” “belt vibration,” and many others are traceable to flimsy idler brackets, bearings, etc. the idler mounting must be designed to be capable of withstanding forces imposed by the operating belt tensions.

SERVICE FACTOR

If the necessary recommendations are followed, it is possible to design satisfactory Synchronous drives using idlers. However, idlers always impose an additional bending stress on the belt. This reduces the belt horsepower rating. This is reflected by an addition **(.2 for each idler)** to the service factor when designing. If the horsepower ratings are not reduced to account for the use of an idler, belt life will be reduced. The rating of a drive or its life expectancy is drastically reduced when idlers below the minimum recommended diameter are used. The bending stress induced in the belt becomes greater as the idler diameter becomes smaller.

CENTER DISTANCES MUST BE FIXED AND RIGID

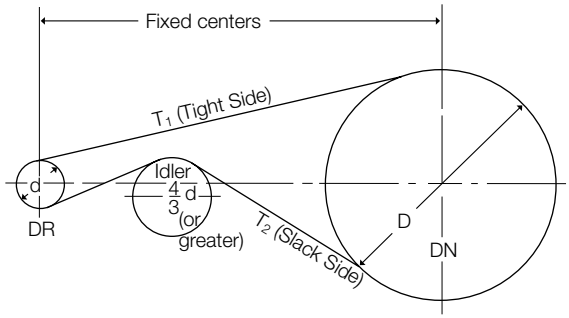

Typical Outside Flat Idler Arrangement

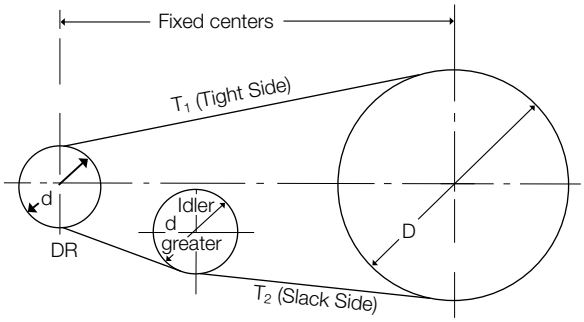

Typical Inside Idler Arrangement

Synchronous Drives

Type of Failure	Cause of Failure	Corrective Action
excessive edge wear (exposed tensile member)	misalignment or non-rigid centers	*check alignment and/or reinforce mounting*
	belt flange	*straighten flange*
jacket wear on pressure-face side of belt tooth	excessive overload and/or excessive belt tightness	*reduce installation tension and/or increase drive load-carrying capacity*
excessive jacket wear between belt teeth (exposed tension members)	excessive installation tension	*reduce installation tension*
cracks in neoprene backing	exposure to excessive low temp (below – 30°F)	*eliminate low temperature condition or consult factory for proper belt construction*
softening of neoprene backing	exposure to excessive heat (+ 200°F) and/or oil	*eliminate high temperature and oil condition or consult factory for proper belt construction*
excessive pulley tooth wear (on pressure-face and/or OD)	excessive overload and/or excessive belt tightness	*reduce installation tension and/or increase drive load-carrying capacity*
	insufficient hardness of pulley material	*surface-harden pulley or use harder material*
unmounting of flange	incorrect flange installation	*reinstall flange correctly*
	misalignment	*correct alignment*
excessive drive noise *	misalignment	*correct alignment*
	excessive installation tension	*reduce tension*
	excessive load	*increase drive load-carrying capacity*
	sub-minimum pulley diameter	*increase pulley diameters*
tooth shear	less than 6 teeth in mesh (TIM)	*increase TIM or use next smaller pitch*
	excessive load	*increase drive load-carrying capacity*
apparent belt stretch	reduction of center distance or non-rigid mounting	*retension drive and/or reinforce mounting*
cracks or premature wear at belt tooth root	improper pulley groove top radius	*regroove or install new pulleys*
tensile break	excessive load	*increase load-carrying capacity of drive*
	sub-minimum pulley diameter	*increase pulley diameters*

***NOTE:** Effective noise reduction for power transmission drives can be accomplished by incorporating a flexible noise absorbing material with the protective guard. The guard design must allow a cooling air passage on the top and bottom to prevent overheating the drive.

Notes