TORQUE-ARM II Shaft Mount Speed Reducers

SCREW CONVEYOR DRIVE - TA2115H, SINGLE AND DOUBLE REDUCTION

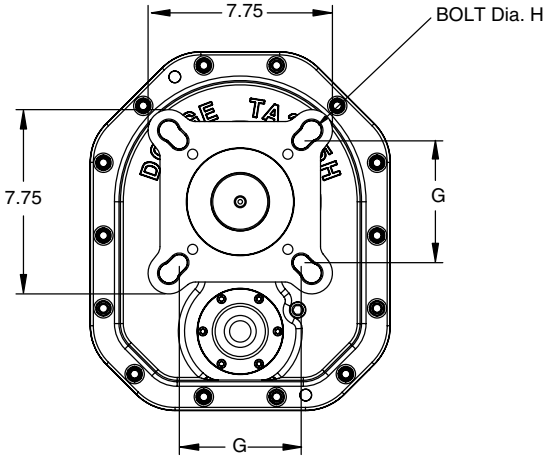

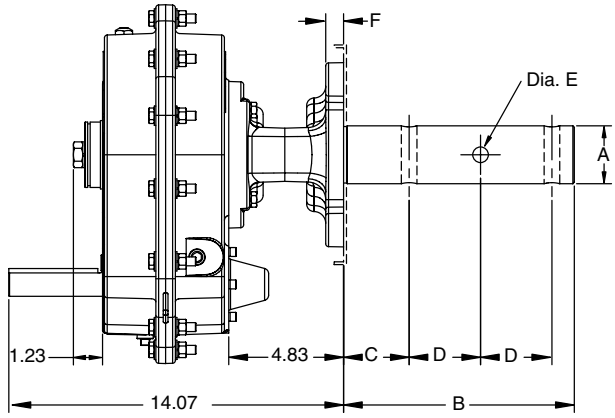

EASY SELECTION PAGE 9	SELECTION PAGE 12	RELATED PRODUCTS PAGE 123	ENGINEERING/TECHNICAL PAGE 129

TORQUE-ARM II Shaft Mount Speed Reducers

SCREW CONVEYOR DRIVE - TA2115H, SINGLE AND DOUBLE REDUCTION

TA2115H Screw Conveyor Drive Dimensions

Screw Dia	Drive Shaft Dia A	Dimensions						
		B	C	D	Hole Dia E	F	G	Bolt Dia H
6, 9	1-1/2	9.00	2.13	3.00	17/32	0.75	4.00	1/2-13
9, 12	2	9.00	2.13	3.00	21/32	0.75	5.13	5/8
12, 14	2-7/16	9.69	2.75	3.00	21/32	0.75	5.63	5/8
12, 14, 16, 18, 20	3	9.88	2.88	3.00	25/32	0.75	6.00	3/4

TA2115H Accessories for Screw Conveyor Drives (1) (4)

Description	Part Number	Weight lbs.
TA2115SCA Adapter & Hardware Kit	**902070**	19.2
TA2115SCP Adjustable Packing Kit (2)	**902071**	1.2
TA2115SCS x 1-1/2 Drive Shaft (3)	**902072**	15.4
TA2115SCS x 2 Drive Shaft	**902073**	18.6
TA2115SCS x 2-7/16 Drive Shaft	**902074**	23.3
TA2115SCS x 3 Drive Shaft	**902075**	29.5
TA2115SCS x 1-1/2 Stainless Steel Drive Shaft	**902080**	15.4
TA2115SCS x 2 Stainless Steel Drive Shaft	**902081**	18.6
TA2115SCS x 2-7/16 Stainless Steel Drive Shaft	**902082**	23.3
TA2115SCS x 3 Stainless Steel Drive Shaft	**902083**	29.5

(1) See page 53 for Belt Guard for Screw Conveyor Drive applications
(2) SCA Adapter & Hardware Kit includes adapter, mounting wedge, keeper plate, key, seals and hardware
(3) SCP Adjustable Packing Kit consists of flange, mounting hardware and braided packing seals
(4) SCS Drive Shaft is a shaft only. Hardware is stocked with the adapter and hardware kit