TORQUE-ARM II Shaft Mount Speed Reducers

TAPER BUSHED REDUCERS - TA10507H, DOUBLE REDUCTION

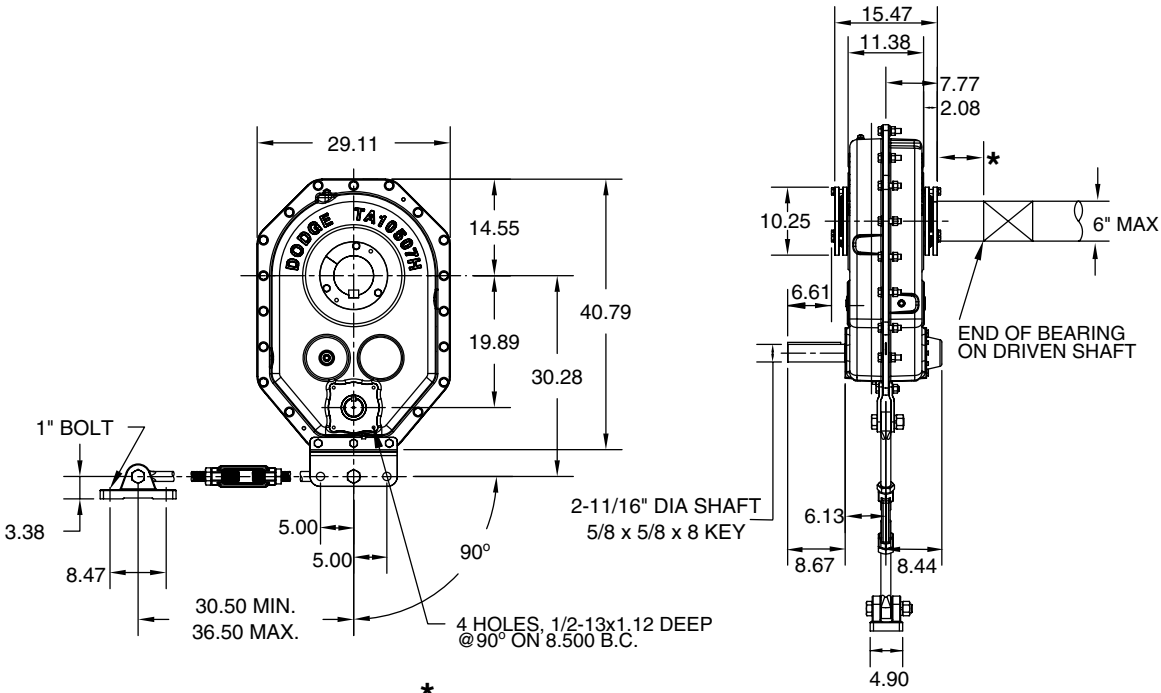

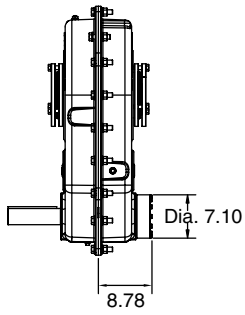

REDUCER WITH BACKSTOP

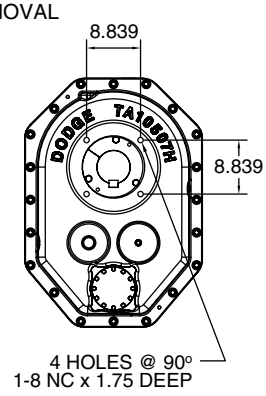

FLANGE MOUNTING DIMENSIONS

EASY SELECTION	SELECTION	RELATED PRODUCTS	ENGINEERING/TECHNICAL
PAGE 9	PAGE 12	PAGE 123	PAGE 129

TORQUE-ARM II Shaft Mount Speed Reducers

TAPER BUSHED REDUCERS - TA10507H, DOUBLE REDUCTION

TA10507H Taper Bushed Reducers (1)

Reducer Size	Part Number	AGMA Code	Actual Ratio	Weight lbs.
TA10507H15	**910002**	507D15	15.09	1022.0
TA10507H25	**910001**	507D25	25.18	1022.0
TA10507H40	**910000**	507D40	39.68	1018.0

(1) Reducers are supplied from stock ready for vertical mounting and for flange mounting. Rod assembly is not included with reducer. Order as a separate part number.

TA10507H Accessories

Description	Part Number	Weight lbs.
TA10507RA Rod Assembly (1)	**910109**	87.0
TA10507BS Backstop Assembly (2)	**910102**	23.5
TA10507BS 40:1 Backstop Assembly (2)	**910103**	25.0
TA10507MM Motor Mount Assembly (254-445T) (3)	**910090**	286.7
TA10507BG Belt Guard - Pos. B (254-445T)	**910096**	158.1
TA10507CF Cooling Fan Assembly ●	**910106**	12.4
TA4-TA12 Vertical Breather Kit	**904112**	3.0
Filter Breather Kit	**430049**	0.2

(2) See page 129 for input shaft speed necessary for backstop sprag lift-off

(3) Motor Mount will fit NEMA and IEC frame motors; however hardware are inch dimensions

● See page 122 for cooling fan dimensions

TA10507H Tapered Bushing Kits (5) (6)

Bushing Size Standard Shaft Bushing Kit	Part Number (7)	Weight lbs.	Shaft Keyseat Required (9) (10)	Bushing Size Short Shaft Bushing Kit (8)	Part Number	Weight lbs.	Shaft Keyseat Required (9) (10)
TA10507TB x 6	**910020**	40.8	1-1/2 x 3/4 x 15.46	---	**---**	---	---
TA10507TB x 5-15/16	**910021**	43.2	1-1/2 x 3/4 x 15.46	---	**---**	---	---
TA10507TB x 5-7/16 ▲	**910022**	50.0	1-1/4 x 5/8 x 15.46	TA10507TBS x 5-7/16	**910027**	47.2	1-1/4 x 5/8 x 9.67
TA10507TB x 4-15/16	**910023**	57.8	1-1/4 x 5/8 x 15.46	TA10507TBS x 4-15/16	**910028**	66.9	1-1/4 x 5/8 x 9.67
TA10507TB x 4-7/16	**910024**	52.8	1 x 1/2 x 15.46	TA10507TBS x 4-7/16	**910029**	75.7	1 x 1/2 x 9.67
TA10507TB x 4-3/16	**910025**	65.6	1 x 1/2 x 15.46	TA10507TBS x 4-3/16	**910030**	80.5	1 x 1/2 x 9.67
TA10507TB x 3-15/16	**910026**	68.4	1 x 1/2 x 15.46	TA10507TBS x 3-15/16	**910031**	85.2	1 x 1/2 x 9.67

▲ AGMA maximum bore size

(5) Bushing kit required to mount TA II reducer to driven shaft

(6) Bushing Kit is not required to mount TA II reducer on SCS Drive Shaft in a screw conveyor application

(7) Standard Shaft Bushing Kit includes two standard bushings with backup plates and snap rings; hardware and one key

(8) Short Shaft Bushing Kit includes one standard bushing; one long bushing with mounting wedge; two backup plates with snap rings; hardware and one key. This is an optional bushing for after market, short shaft mounting.

(9) Minimum keyseat and shaft length required to mount reducer with bushing kit

(10) Always check the driven shaft and key for strength