Mounted Zone Cabling Enclosures and Brackets

Wall Mounted Enclosure Accessory

Replacement Lock and Keys

Features

- For use with all Consolidation Point wall mounted enclosures



Ordering Information

Qty	Material	Catalog Number	UPC Number
1	Chromed Steel	**FLOCK1**	662620812243

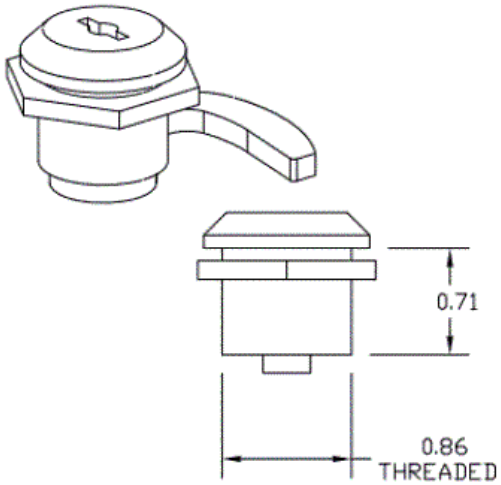

Specifications

Finish	Chrome steel
Replacement item	CPE-type enclosures

Characteristics

Installation	Consolidation Point Enclosure

Accessories

Black Velcro Roll	**HVFBK575**
9" Velco Strips, Yellow	**MCCMV9YL10**

Online Resources

eCatalog

Dimensions in Inches (mm)

Wiring Device-Kellems