iStation
Wallplates

Stainless Steel Plate, Front Loading

Features

- Accepts Most Hubbell iStation Front-Loading Modules



Ordering Information

Description	Color	Catalog No.	UPC
iStation Stainless Steel Plate, Front Loading, 1-Gang	Silver	**IMSS1**	662620216966

Listings

UL and cUL Listed 1863
RoHS Compliant

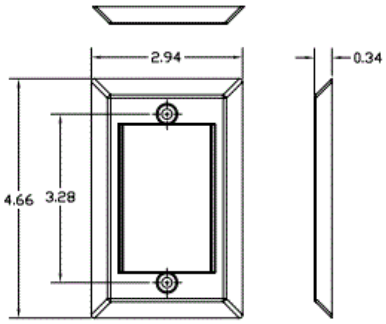

Specifications

Modular Frames	Fits most Hubbell iStation modules
Plate Material	Type 430 stainless steel

Online Resources

eCatalog

Applications

Medical Facilities
Laboratories
Manufacturing Plants
Education Facilities