ITEM NO.	DESCRIPTION	QTY.
1	STAINLESS STEEL FACEPLATE	1
2	MODULAR PLASTIC BEZEL	1
3	#6–32 MOUNTING SCREW	4

CATALOG NUMBER	FINISH	DESCRIPTION
IMSS2	BRUSHED	iSTATION 2–GANG STAINLESS STEEL FACEPLATE

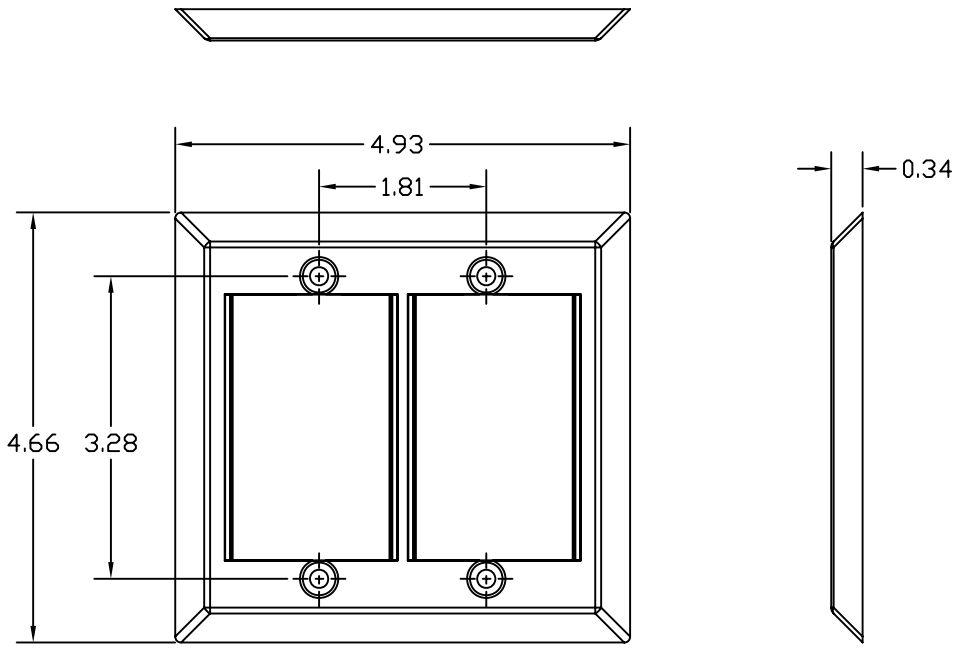

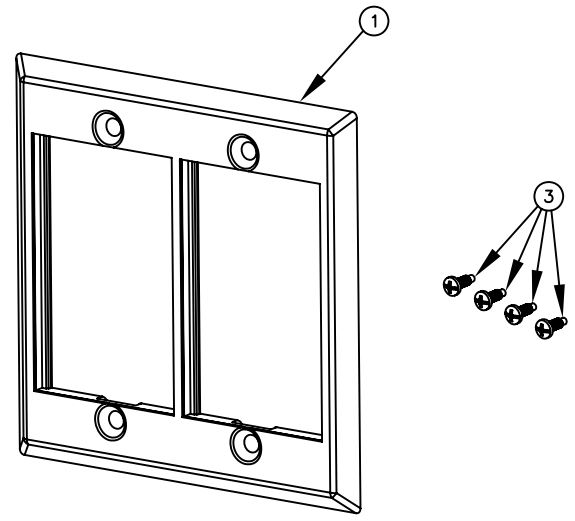

NOTES:
1. SPECIFICATIONS SUBJECT TO CHANGE WITHOUT NOTICE.
2. COMPATIBLE WITH ALL iSTATION MODULES.
3. UL & cUL LISTED.

REV.	ECN	DATE	DESCRIPTION	CHG BY	APPD BY
B	6667	10/21/09	UPDATED DIMENSIONS	CG	

Created on AUTOCAD

DIMENSIONING AND TOLERANCE PER ANSI Y14.5M–1982
UNLESS OTHERWISE SPECIFIED, DIMENSIONS ARE IN INCHES (MM).
TOLERANCES
.XX = ±.01 (.25)
.XXX = ±.005 (.127)
.XXXX = ±.0025 (.0635)
ANGLE TOL ±1°

IN ACCEPTING OUR DRAWINGS, BLUEPRINTS, OR SUPPORTING DOCUMENTATION FOR QUOTATION OR OTHER PURPOSES, YOU AGREE NOT TO DISCLOSE TO OTHERS THE IDEAS, INFORMATION, OR DESIGNS SHOWN HEREIN, AND THAT YOU WILL MAKE NO USE OF SAME WITHOUT PERMISSION

PROJECT REFERENCE: 032–09

MATERIAL: 430 STAINLESS STEEL

DRAWN BY: C. GRIBBLE 8/27/09

CHECKED BY:

APPROVED BY:

Hubbell Premise Wiring
HUBBELL INCORPORATED (Delaware)
14 Lord's Hill Road, Stonington, Connecticut 06378

TITLE: iSTATION STAINLESS STEEL FACEPLATE 2-GANG

SIZE: B | DRAWING NO.: HWS12699C | REV.: B

SCALE: 1/2 | SHEET 1 OF 1