iStation

Wallplates

Stainless Steel Plate with Label Fields, Rear Loading

Features

- Fits all Hubbell keystone connections (AV, data and fiber)
- Secure; Requires removal to access connectivity
- Rear, Flush Mounting Improves Tamper-Resistance
- Manufactured From Type 430 Stainless Steel, Brushed Finish



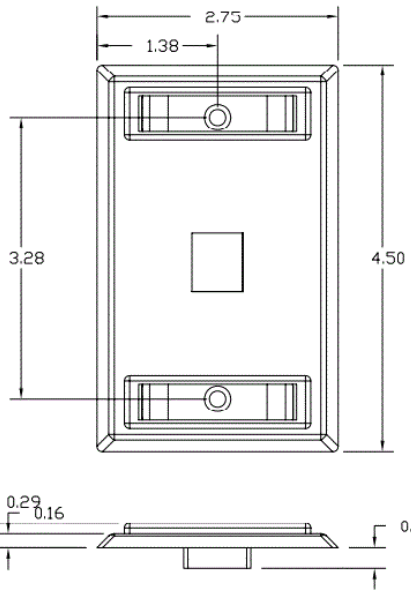

Ordering Information

Description	Color	UPC Number	Catalog No.
iStation Stainless Steel Plate, Rear Loading, Single Gang, 1-Port	Silver	662620846200	**SSFL11**

Listings

UL and cUL Listed 1863
RoHS Compliant

Specifications

Keystone	Fits all Hubbell keystone connections (AV, data and fiber)
Plate Material	Type 430 stainless steel

Applications

Medical Facilities
Laboratories
Manufacturing Plants
Education Facilities

Online Resources

eCatalog

Dimensions in Inches (mm)

Hubbell Wiring Device-Kellems • Hubbell Incorporated (Delaware) • 40 Waterview Drive • Shelton, CT 06484
Phone (800) 288-6000 • Fax (800) 255-1031 • Specifications subject to change without notice.

Wiring Device-Kellems