**iStation**

**Wallplates**

# Stainless Steel Plate with Label Fields, Rear Loading

## Features

- Fits all Hubbell keystone connections (AV, data and fiber)
- Secure; Requires removal to access connectivity
- Rear, Flush Mounting Improves Tamper-Resistance
- Manufactured From Type 430 Stainless Steel, Brushed Finish

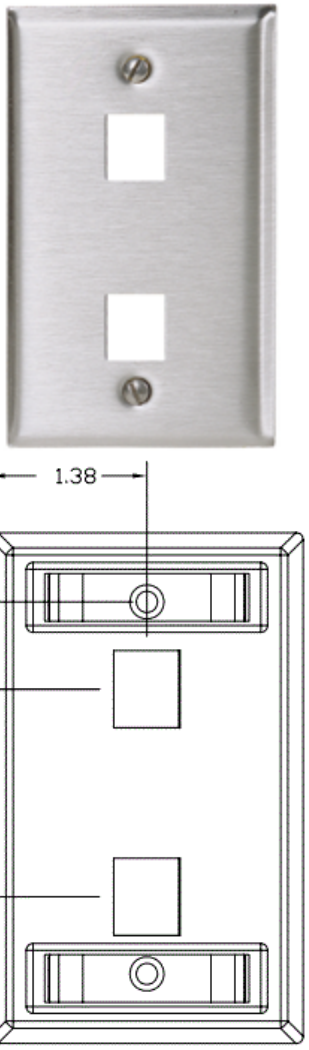


## Ordering Information

| Description | Color | UPC Number | Catalog No. |
|---|---|---|---|
| iStation Stainless Steel Plate with Label Fields, Rear Loading, Double Gang, 2-Port | Silver | 662620846217 | **SSFL12** |

## Listings

UL and cUL Listed 1863
RoHS Compliant

## Specifications

| | |
|---|---|
| Keystone | Fits all Hubbell keystone connections (AV, data and fiber) |
| Plate Material | Type 430 stainless steel |

## Applications

Medical Facilities
Laboratories
Manufacturing Plants
Education Facilities

## Online Resources

eCatalog

Dimensions in Inches (mm)

Hubbell Wiring Device-Kellems • Hubbell Incorporated (Delaware) • 40 Waterview Drive • Shelton, CT 06484
Phone (800) 288-6000 • Fax (800) 255-1031 • Specifications subject to change without notice.

Wiring Device-Kellems