iStation
Wallplates

Stainless Steel Plate with Label Fields, Rear Loading

Features

- Fits all Hubbell keystone connections (AV, data and fiber)
- Secure; Requires removal to access connectivity
- Rear, Flush Mounting Improves Tamper-Resistance
- Manufactured From Type 430 Stainless Steel, Brushed Finish

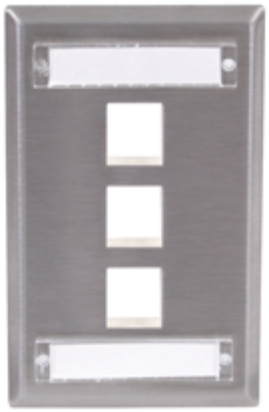

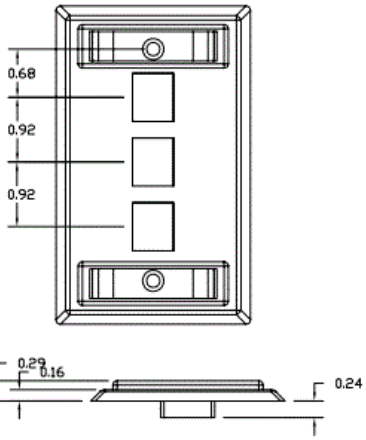

Ordering Information

Description	Color	Catalog No.	UPC
iStation Stainless Steel Plate with Label Fields, Rear Loading, Single Gang, 3-Port	Silver	**SSFL13**	662620846224

Listings

UL and cUL Listed 1863
RoHS Compliant

Specifications

Keystone	Fits all Hubbell keystone connections (AV, data and fiber)
Plate Material	Type 430 stainless steel

Online Resources

eCatalog

Applications

Medical Facilities
Laboratories
Manufacturing Plants
Education Facilities