DIMENSIONS

IN-LINE HELICAL GEAR REDUCER (ILH)

SIZE: HB128

Separate - Foot Mounted
Double/Triple Reduction

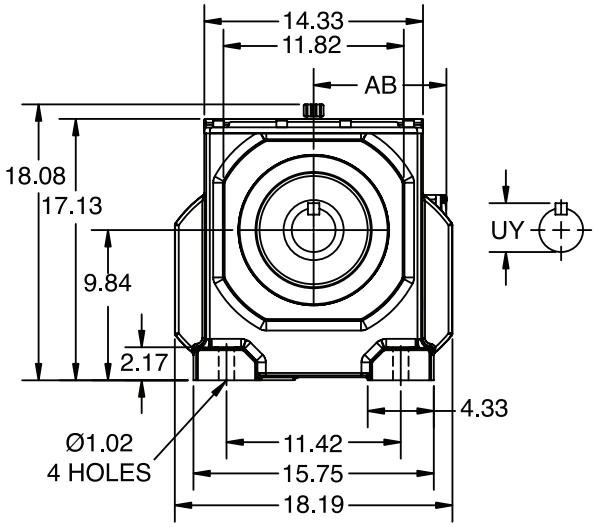

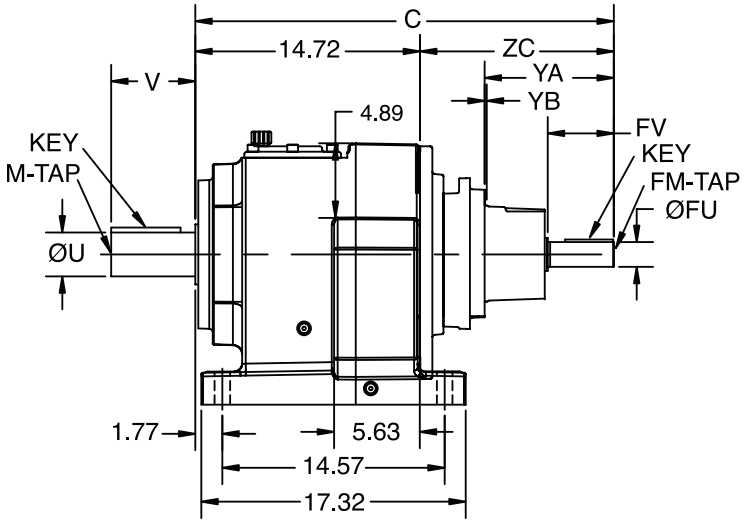

METRIC OUTPUT SHAFT

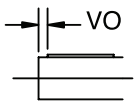

METRIC INPUT SHAFT

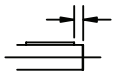

NOMENCLATURE PAGE ILH-4	MOUNTING POSITIONS PAGE ILH-7	STOCK/NON-STOCK PART NUMBERS PAGE ILH-67	WEIGHTS PAGE ILH-343

DODGE®

IN-LINE HELICAL GEAR REDUCER (ILH)

SIZE: HB128

Separate - Foot Mounted
Double/Triple Reduction

Standard Output Shaft — **Dimension - Inch/MM**

ØU	tol.	UY	V	VO	KEY	M-TAP x DEPTH
2.875	+0.0000 -0.0010	3.20	5.51	-	3/4 x 3/4 x 4-1/2	3/4 - 10 UNC x 1.65
70	+0.030 +0.011	75	140	15	20 x 12 x 110	M20 x 42

Optional Output Shaft — **Dimension - Inch/MM**

ØU	tol.	UY	V	VO	KEY	M-TAP x DEPTH
3.625	+0.0000 -0.0010	4.01	6.69	-	7/8 x 7/8 x 5-5/8	1-8 UNC x 1.97
90	+0.035 +0.013	95	170	15	25 x 14 x 140	M24 x 50

Separate Input — **Dimension - Inch/MM**

	H128 Double		H128 Triple		FO	FM x Depth	ØFU	tol.	FV	YA	YB	KEY
	C	ZC	C	ZC								
90	-	-	21.89	7.17	-	5/16-18 UNC x 0.75	0.875	+0.0000 -0.0005	1.97	2.80	0.16	3/16 x 3/16 x 1-5/8
	-	-	556	182	5	M8 x 19	24	+0.015 +0.002	50			8 x 7 x 40
100	-	-	22.52	7.80	-	3/8-16 UNC x 0.87	1.125	+0.0000 -0.0005	2.36	3.27	0.16	1/4 x 1/4 x 2
	-	-	572	198	5	M10 x 22	28	+0.015 +0.002	60			8 x 7 x 50
112	-	-	22.32	7.60	-	3/8-16 UNC x 0.87	1.250	+0.0000 -0.0005	2.36	3.27	0.16	1/4 x 1/4 x 2
	-	-	567	193	5	M10 x 22	28	+0.015 +0.002	60			8 x 7 x 50
132	24.29	9.57	25.63	10.91	-	3/8-16 UNC x 1.10	1.375	+0.0000 -0.0005	3.15	6.61	0.14	5/16 x 5/16 x 2-3/4
	617	243	651	277	5	M12 x 28	38	+0.018 +0.002	80			10 x 8 x 70
160	25.79	11.07	27.24	12.52	-	5/8-11 UNC x 1.42	1.625	+0.0000 -0.0010	4.33	8.46	0.14	3/8 x 3/8 x 3-1/2
	655	281	692	318	10	M16 x 36	42	+0.018 +0.002	110			12 x 8 x 90
180	26.73	12.01	28.19	13.47	-	3/4-10 UNC x 1.65	2.125	+0.0000 -0.0010	4.33	9.25	0.16	1/2 x 1/2 x 3-5/8
	679	305	716	342	10	M20 x 42	55	+0.030 +0.011	110			16 x 10 x 90
225	27.80	13.08	-	-	-	3/4-10 UNC x 1.65	2.125	+0.0000 -0.0010	4.33	9.02	0.14	1/2 x 1/2 x 3-5/8
	736	362	-	-	15	M20 x 42	60	+0.030 +0.011	140	259		18 x 11 x 110

Refer to page Engineering-4 for Input Shaft and Flange details.

NOMENCLATURE PAGE ILH-4	MOUNTING POSITIONS PAGE ILH-7	STOCK/NON-STOCK PART NUMBERS PAGE ILH-67	WEIGHTS PAGE ILH-343