BALDOR • RELIANCE

Customer information packet

CFSWDNM3554-E-G

1.5HP, 1765RPM, 3PH, 60HZ, 56C, 3540M, TENV, F1
Class - None
Division - Not Applicable

Copyright © All product information within this document is subject to ABB Motors and Mechanical Inc. copyright © protection, unless otherwise noted.
4/7/2025 9:07:55 AM

Specifications

Enclosure	TENV
Frame	56C
Frame Material	Stainless Steel
Frequency	60.00 Hz
Haz Area Class and Group	None
Haz Area Division	Not Applicable
Motor Letter Type	Three Phase
Output @ Frequency	1.500 HP @ 60 HZ
Phase	3
Synchronous Speed @ Frequency	1800 RPM @ 60 HZ
Voltage @ Frequency	230.0 V @ 60 HZ
	460.0 V @ 60 HZ
Agency Approvals	WEEE
	CURUSEEV
	NEMA PREMIUM
Ambient Temperature	40 °C
Auxillary Box	No Auxillary Box
Auxillary Box Lead Termination	None
Base Indicator	Rigid
Bearing Grease Type	Polyrex EM (-20F +300F)
Blower	None
Current @ Voltage	3.900 A @ 230.0 V
	1.950 A @ 460.0 V
Design Code	B
Drip Cover	No Drip Cover
Duty Rating	CONT
Efficiency @ 100% Load	86.5 %
Electrically Isolated Bearing	Not Electrically Isolated
Feedback Device	NO FEEDBACK
Front Shaft Indicator	None
Heater Indicator	No Heater
High Voltage Full Load Amps	2.0 a

Part detail

Revision	-
Type	AC
Mech. spec.	35E6048
Base	
Status	PRD/A
Elec. spec.	35WGZ820
Layout	35LYE6048
Eff. date	08-14-2023
CD Diagram	CD0005
Poles	04
Leads	9#18
Proprietary	False
Created date	02-21-2023

Insulation Class	H
Inverter Code	Inverter Duty
KVA Code	M
Lifting Lugs	No Lifting Lugs
Locked Bearing Indicator	Locked Bearing
Motor Finish	UNPAINTED
Motor Lead Quantity/Wire Size	9 @ 18 AWG
Motor Lead Termination	Flying Leads
Motor Standards	NEMA
Motor Type	3540M
Mounting Arrangement	F1
Number of Poles	4
Overall Length	12.78 IN
Power Factor	72
Product Family	WD All SS Encapsulated
Pulley End Bearing Type	Sealed Bearing
Pulley Face Code	C-Face
Pulley Shaft Indicator	Standard
Rodent Screen	None
RoHS Status	ROHS COMPLIANT
Service Factor	1.15
Shaft Diameter	0.625 IN
Shaft Ground Indicator	Shaft Grounding
Shaft Rotation	Reversible
Shaft Slinger Indicator	No Slinger
Speed	1765 rpm
Speed Code	Single Speed
Starting Method	Direct on line
Thermal Device - Bearing	None
Thermal Device - Winding	None
Vibration Sensor Indicator	No Vibration Sensor
Winding Thermal 1	None
Winding Thermal 2	None

Nameplate

NP4427AAA01A												
CAT #	CFSWDNM3554-E-G			**LBS**								
SPEC	35E6048Z820G1			**ENCL**	TENV							
SER #				**CC**	010A	**IP**	69					
HP	1.5		**MAG CUR**	2/1								
VOLTS	230/460					**NEMA NOM. EFF**	86.5					
AMPS	3.9/1.95				**PF**	72						
RATING	40C AMB-CONT											
RPM	1765			**MAX RPM**								
FRAME	56C	**HZ**	60	**CODE**	M	**CLASS**	H					
SER.F.	1.15	**SF AMP**	4.4/2.2		**PH**	3	**DES**	B				
DE	6205		**ODE**	6205								
LUBRICATION	POLYREX EM											
ID LOGO	**INVERTER TYPE**		**VPWM**		**CHP**	60	**TO**	90	1.5:1			
ID LOGO	**WK2**	0.289	**CT**	3	**TO**	60	20:1					
ID LOGO	**SL HZ**	1.17	**VT**	3	**TO**	60	20:1					
					QR							
YR												

AC Induction Motor Performance Data
Record # 65290
Typical performance - not guaranteed values

Winding: 35WGL761-R001 **Type:** 3540M **Enclosure:** TENV

Nameplate Data			
Rated Output (HP)			1.5
Volts			230/460
Full Load Amps			4.2/2.1
R.P.M.			1750
Hz	60	**Phase**	3
NEMA Design Code	B	**KVA Code**	L
Service Factor (S.F.)			1.15
NEMA Nom. Eff.	86.5	**Power Factor**	77
Rating - Duty			40C AMB-CONT
S.F. Amps			

460 V, 60 Hz: High Voltage Connection	
Full Load Torque	4.5 LB-FT
Start Configuration	direct on line
Breakdown Torque	20.03 LB-FT
Pull-up Torque	12.76 LB-FT
Locked-rotor Torque	15.53 LB-FT
Starting Current	18.5 A
No-load Current	1.09 A
Line-line Res. @ 25ºC	8.6 Ω
Temp. Rise @ Rated Load	80°C
Temp. Rise @ S.F. Load	97°C
Locked-rotor Power Factor	45.3
Rotor inertia	0.236 LB-FT2

Load Characteristics 460 V, 60 Hz, 1.5 HP

% of Rated Load	25	50	75	100	125	150	S.F.
Power Factor	36	58	70	77	82	85	80
Efficiency	81	87.9	88.8	88.6	87.6	86.5	88
Speed	1789	1778	1766	1754	1741	1726	1746
Line amperes	1.2	1.39	1.7	2.05	2.44	2.89	2.28

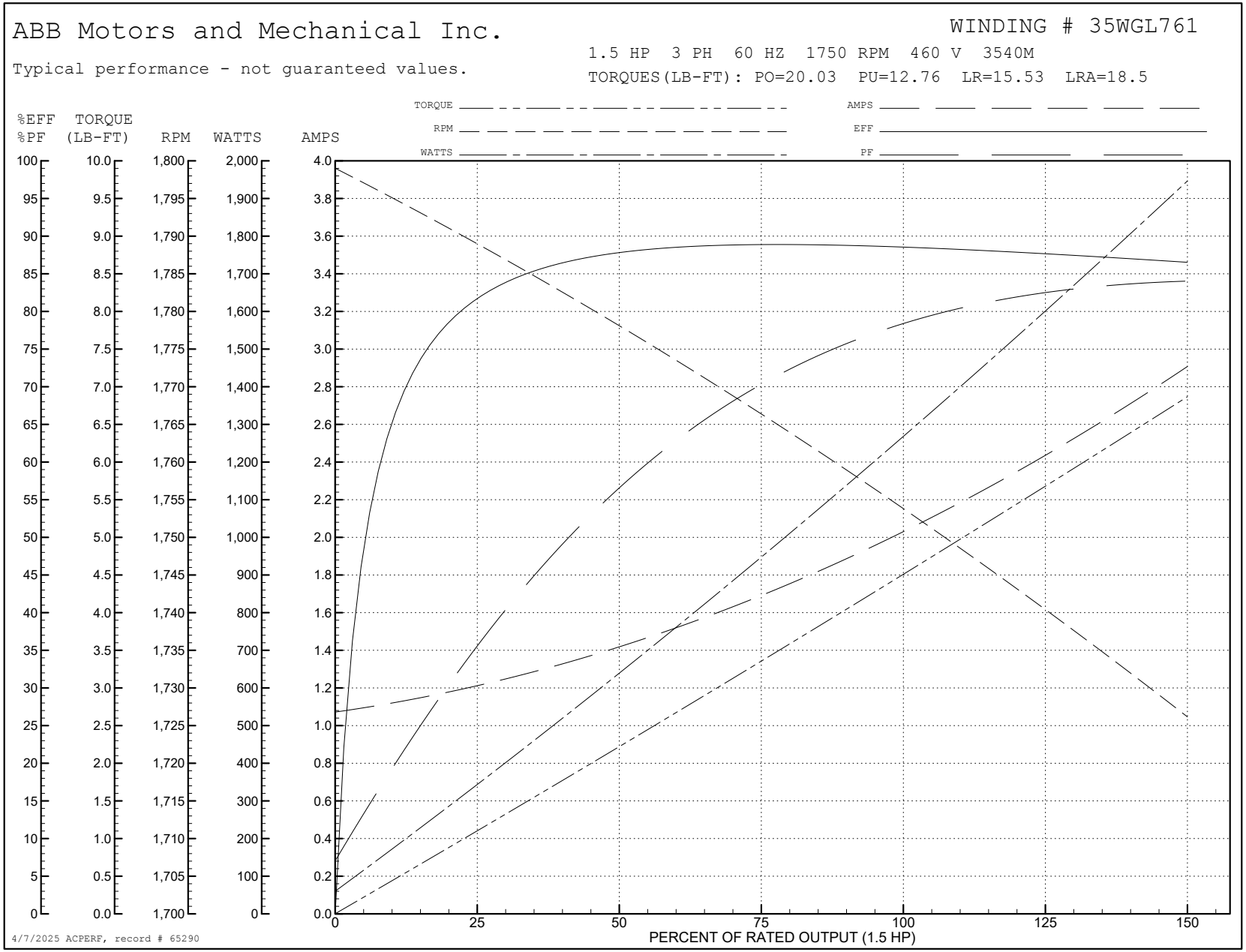
ABB Motors and Mechanical Inc.
WINDING # 35WGL761
Typical performance - not guaranteed values.
1.5 HP 3 PH 60 HZ 1750 RPM 460 V 3540M
TORQUES(LB-FT): PO=20.03 PU=12.76 LR=15.53 LRA=18.5
TORQUE
RPM
WATTS
AMPS
EFF
PF
%EFF %PF
TORQUE (LB-FT)
RPM
WATTS
AMPS
PERCENT OF RATED OUTPUT (1.5 HP)
4/7/2025 ACPERF, record # 65290

35LYE6048

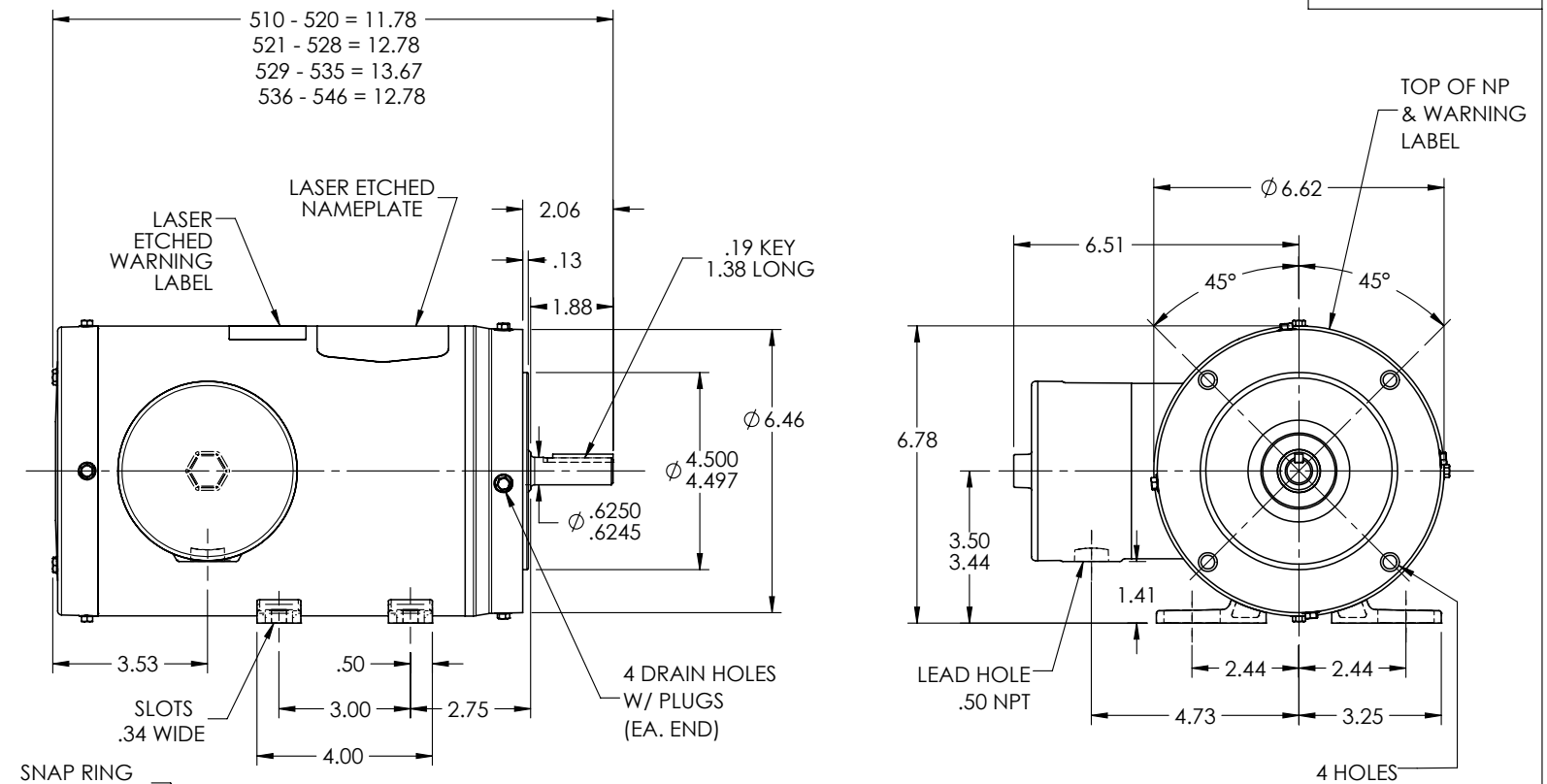

PULLEY END DETAIL

CUSTOMER IS RESPONSIBLE FOR DETERMINING THAT THE PRODUCT WILL PERFORM SUITABLY IN THE INTENDED APPLICATION

REV. DESC: NEW TO REPLACE 35LY-000-648			
REV: -	VERSION: 00	REVISED: 11:34:24 02/08/2023	TDR: 000001202627
35LYE6048	MODEL NO. 35LYE6048		REF: -
	BY: ENSTEK0		

BALDOR - RELIANCE®

STD HORZ 56C TENV 35M WD11/12 INT AEGIS SH GRD

35LYE6048

CD0005

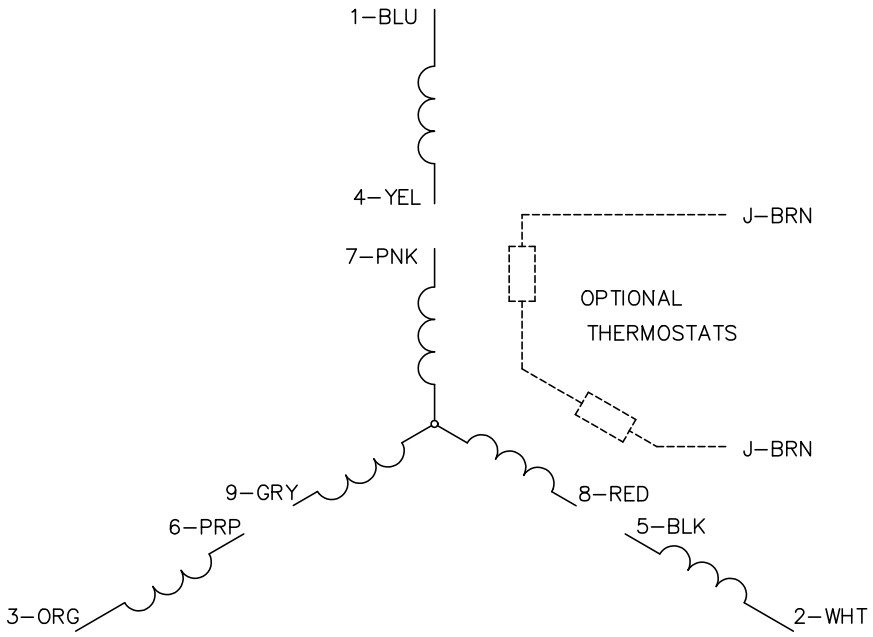

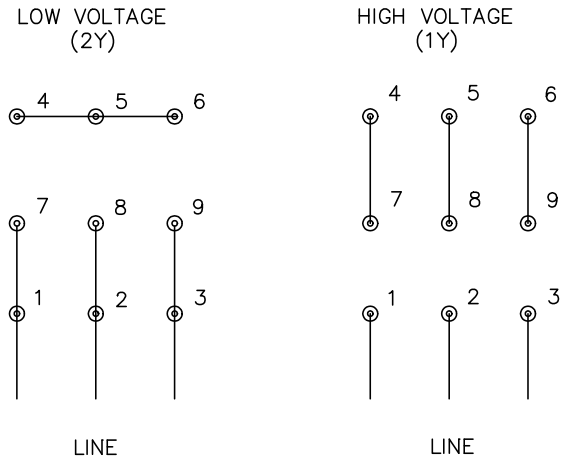

NOTES:

1. INTERCHANGE ANY TWO LINE LEADS TO REVERSE ROTATION.
2. OPTIONAL THERMOSTATS ARE PROVIDED WHEN SPECIFIED.
3. ACTUAL NUMBER OF INTERNAL PARALLEL CIRCUITS MAY BE A MULTIPLE OF THOSE SHOWN ABOVE.
4. LEAD COLORS ARE OPTIONAL. LEADS MUST ALWAYS BE NUMBERED AS SHOWN.

CD0005

REV. DESC: REVISE TO SHOW OPTIONAL COLORS			BALDOR ELECTRIC Co.
REV. LTR: E	BY: JLP	REVISED: 01/19/99 10:15	TDR: 0171435
CD0005		FILE: AAA00005140	MDL: –
		MTL: –	3PH, DV, 9 LEADS