BALDOR • RELIANCE

# Customer information packet

## ECS101M0H15FC4

15HP, 1800RPM, 3PH, 60HZ, 215TC, 3760B, TEFC, F
Class - None
Division - Not Applicable

Copyright © All product information within this document is subject to ABB Motors and Mechanical Inc. copyright © protection, unless otherwise noted.
4/7/2025 10:21:05 AM

## Specifications

| | |
|---|---|
| **Enclosure** | TEFC |
| **Frame** | 215TC |
| **Frame Material** | Steel |
| **Frequency** | 60.00 Hz |
| **Haz Area Class and Group** | None |
| **Haz Area Division** | Not Applicable |
| **Motor Letter Type** | Three Phase |
| **Output @ Frequency** | 15.000 HP @ 60 HZ |
| **Phase** | 3 |
| **Synchronous Speed @ Frequency** | 1800 RPM @ 60 HZ |
| **Voltage @ Frequency** | 230.0 V @ 60 HZ |
| | 460.0 V @ 60 HZ |
| **Agency Approvals** | UL |
| | WEEE |
| **Ambient Temperature** | 40 °C |
| **Auxillary Box** | No Auxillary Box |
| **Auxillary Box Lead Termination** | None |
| **Base Indicator** | No Mounting |
| **Bearing Grease Type** | Polyrex EM (-20F +300F) |
| **Blower** | None |
| **Constant Torque Speed Range** | 6 |
| **Current @ Voltage** | 17.400 A @ 460.0 V |
| | 34.800 A @ 230.0 V |
| **Drip Cover** | No Drip Cover |
| **Duty Rating** | CONT |
| **Efficiency @ 100% Load** | 95.6 % |
| **Electrically Isolated Bearing** | Not Electrically Isolated |
| **Feedback Device** | NO FEEDBACK |
| **Heater Indicator** | No Heater |
| **High Voltage Full Load Amps** | 17.4 a |
| **Insulation Class** | F |
| **Inverter Code** | Inverter Duty |

## Part detail

| | |
|---|---|
| **Revision** | E |
| **Type** | AC |
| **Mech. spec.** | |
| **Base** | |
| **Status** | PRD/A |
| **Elec. spec.** | 37WGA0018 |
| **Layout** | 37LYQ488 |
| **Eff. date** | 09-09-2024 |
| **CD Diagram** | CD0005A25 |
| **Poles** | 04 |
| **Leads** | 9#12 |
| **Proprietary** | False |
| **Created date** | 10-07-2020 |

| | |
|---|---|
| **IP Rating** | NONE |
| **Lifting Lugs** | Standard Lifting Lugs |
| **Locked Bearing Indicator** | Locked Bearing |
| **Motor Lead Termination** | Flying Leads |
| **Motor Standards** | NEMA |
| **Motor Type** | 3760B |
| **Mounting Arrangement** | F1 |
| **Number of Poles** | 4 |
| **Overall Length** | 22.69 IN |
| **Power Factor** | 97 |
| **Product Family** | General Purpose |
| **Pulley Face Code** | C-Face |
| **Rodent Screen** | None |
| **Service Factor** | 1.50 |
| **Shaft Diameter** | 1.375 IN |
| **Shaft Ground Indicator** | Shaft Grounding |
| **Shaft Rotation** | Reversible |
| **Speed** | 1800 rpm |
| **Speed Code** | Single Speed |
| **Starting Method** | Direct on line |
| **Thermal Device - Bearing** | None |
| **Thermal Device - Winding** | None |
| **Vibration Sensor Indicator** | No Vibration Sensor |
| **Winding Thermal 1** | None |
| **Winding Thermal 2** | None |

**Nameplate**

| NP3968A01A01 | | | | | | | | | |
|---|---|---|---|---|---|---|---|---|---|
| **CAT.NO.** | ECS101M0H15FC4 | | | | | | | | |
| **SPEC.** | 37-0000-0297 | | | | | | | | |
| **FRAME** | 215TC | | | **ENCL.** | TEFC | | **IP** | 54 | |
| **HP** | 15 | | 40 | **C AMB** | | CONT | | | |
| **NOM. EFF.** | 95.6 | **PF** | 97 | | **SF** | 1.5 | | | |
| **VOLTS** | 230/460 | | | **FLA** | 35.49/17.75 | | | | |
| **RPM** | 1800 | | | **RPM-MAX** | 3000 | | | | |
| **HZ** | 60 | | **PH.** | 3 | **CLASS** | F | | | |
| **BEMF (V)** | 117/234 | | | | **RS (OHMS)** | 0.12/0.50 | | | |
| **LD (MH)** | 3.39/13.46 | | | | **LQ (MH)** | 10.59/42.17 | | | |
| **VPWM** | **CHP** | 60 | **TO** | 100 | | | | | |
| **CT** | 6 | **TO** | 60 | **VT** | 1 | **TO** | 100 | | |
| **MATCHED INV** | ACS380-04XX-[N/A]/25A0-4 | | | | | | | | |
| **DE** | 6307 | | | **ODE** | 6206 | | | | |
| **SERIAL #** | | | | | | | | | |

37LYQ488

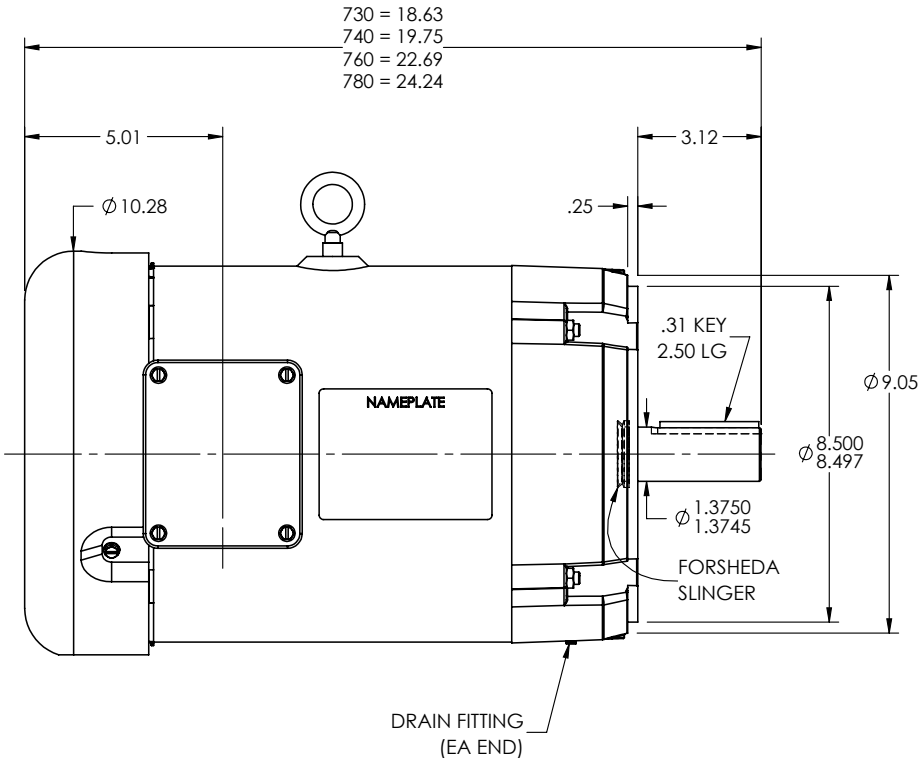


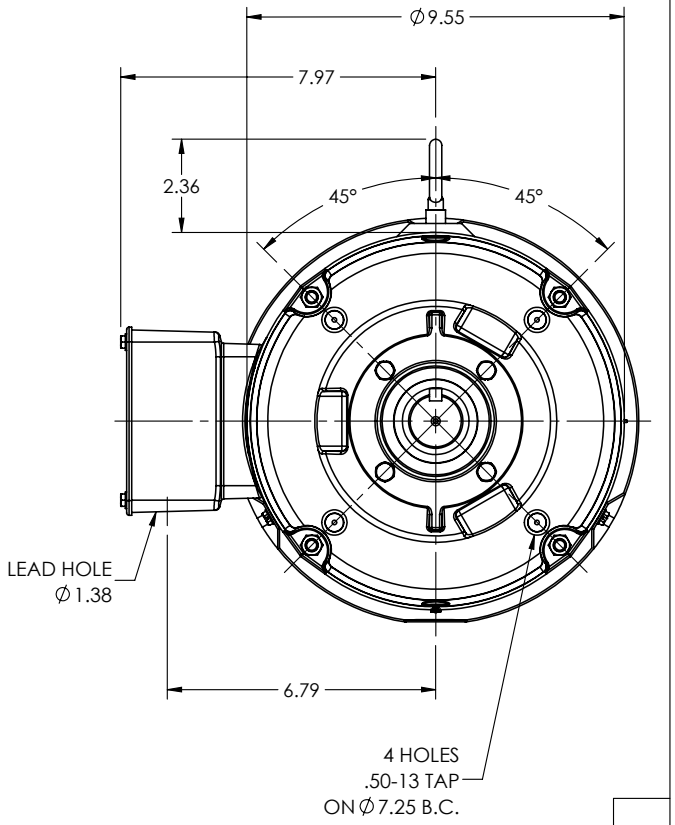


37LYQ488

| | | | |
|---|---|---|---|
| REV. DESC: UPDATE DRAWING GRAPHICS | | | |
| REV: A | VERSION: 01 | REVISED: 09:12:25 04/20/2022 | TDR: 000001189579 |
| 37LYQ488 | MODEL NO. 37LYQ488 | | REF: - |
| | BY: ENJEFD0 | | |

BALDOR - RELIANCE®

VER 213-5TC TEFC B INT SH GND ECS

CD0005A25

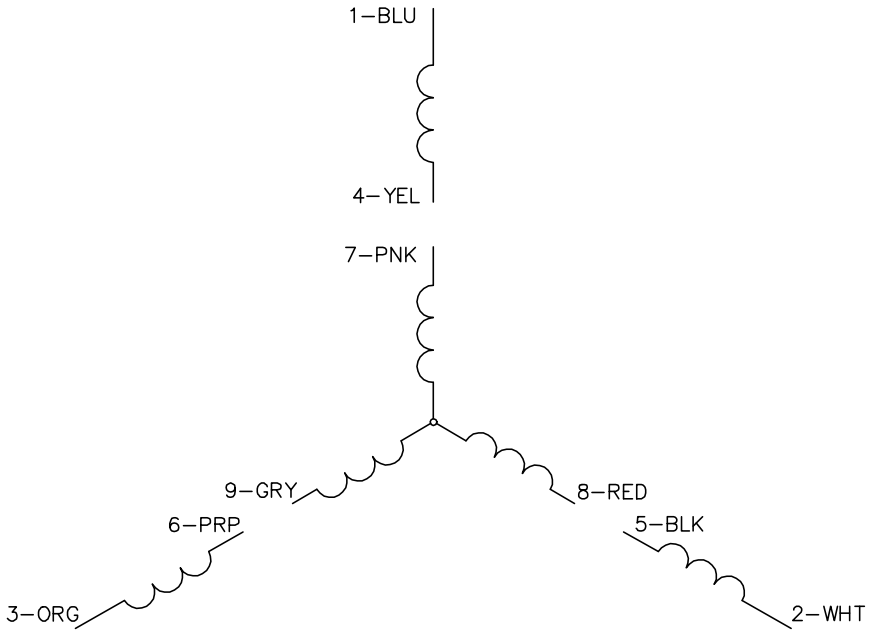


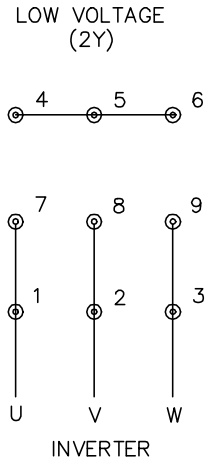


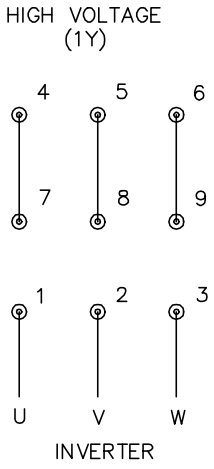


NOTES:

1. INTERCHANGE ANY TWO LINE LEADS TO REVERSE ROTATION.
2. ACTUAL NUMBER OF INTERNAL PARALLEL CIRCUITS MAY BE A MULTIPLE OF THOSE SHOWN ABOVE.
3. LEAD COLORS ARE OPTIONAL. LEADS MUST ALWAYS BE NUMBERED AS SHOWN.

CD0005A25

| | | |
|---|---|---|
| REV. DESC: NEW | | |
| REV. LTR: – | VERSION: 00 | TDR: 000001135746 |
| FILE: \AAA\00253\082 | REVISED: 01:10:57 03/30/2020 | BY: ENMARSO |
| MTL: – | | |

BALDOR - RELIANCE®

3PH, DV, 9 LEADS, ECS

SH 1 of 1