BALDOR • RELIANCE

Customer information packet

IDDRPM322004ED

200HP, 1750, 460V, RL3203, DPFV, F1

Copyright © All product information within this document is subject to ABB Motors and Mechanical Inc. copyright © protection, unless otherwise noted.
4/7/2025 11:49:54 AM

Specifications

Enclosure	DPFV
Frame	RL3203Z
Frame Material	Exposed Laminations
Frequency	60.00 Hz
Output @ Frequency	200.000 HP @ 60 HZ
Phase	3
Synchronous Speed @ Frequency	1800 RPM @ 60 HZ
Voltage @ Frequency	460.0 V @ 60 HZ
Agency Approvals	CCSA US
Auxillary Box	No Auxillary Box
Base Indicator	Rigid
Bearing Grease Type	Polyrex EM (-20F +300F)
Current @ Voltage	244.000 A @ 460.0 V
Duty Rating	CONT
Feedback Device	NO FEEDBACK
Frame Prefix	RL
Heater Indicator	No Heater
High Voltage Full Load Amps	244.0 a
Insulation Class	H
IP Rating	NONE
Motor Standards	NEMA
Mounting Arrangement	F1
Overall Length	46.10 IN
Product Family	Extruder
Pulley End Bearing Type	Ball
Pulley Face Code	Standard
Service Factor	1.00
Shaft Diameter	2.874 IN
Shaft Ground Indicator	Shaft Grounding
Shaft Rotation	Reversible
Speed	1777 rpm
Starting Method	Full Voltage

Part detail

Revision	B
Type	AC
Mech. spec.	
Base	
Status	PRD/A
Elec. spec.	L9491A
Layout	619691-001
Eff. date	06-30-2023
CD Diagram	422927-001
Poles	04
Leads	
Proprietary	False
Created date	03-06-2023

Thermal Device - Bearing	None
Thermal Device - Winding	Thermostat And RTD

Nameplate

000613006ABS

DUTY	HP	RPM	AMPS	VOLTS	HZ
CONT	200	1777	245	460	60
CONT	200	2300	227	460	77.7

CAT.NO.	IDDRPM322004ED	**SPEC. NO.**	R32-A000-0414				
SER.NO		**FR**	RL3203Z	**INSUL**	H		
PH.	3	**MAX SAFE SPEED**	4000	**AMB.**	40	**MIN. AMB.**	-25
DESIGN NO.	L9491A	**TYPE**		**ENCL.**	DPG-FV		
S.F.	1.00	**D.E. BRG.**	85BC02J30X				
ENCL MOD		**O.D.E. BRG.**	6313/C3VL0241				
	IP23						

RPM-AC FINNED FRAME VARIABLE SPEED ALTERNATING CURRENT MOTOR
RL & URL3203Z

619691-001

ENCLOSURE: DRIP PROOF

MOUNTING: FOOT

DRIVE METHOD: COUPLED OR BELTED

COOLING: FORCE VENTILATED

ACCESSORIES: PROVISIONS FOR TACHOMETER MOUNTING ONLY WHEN SPECIFIED

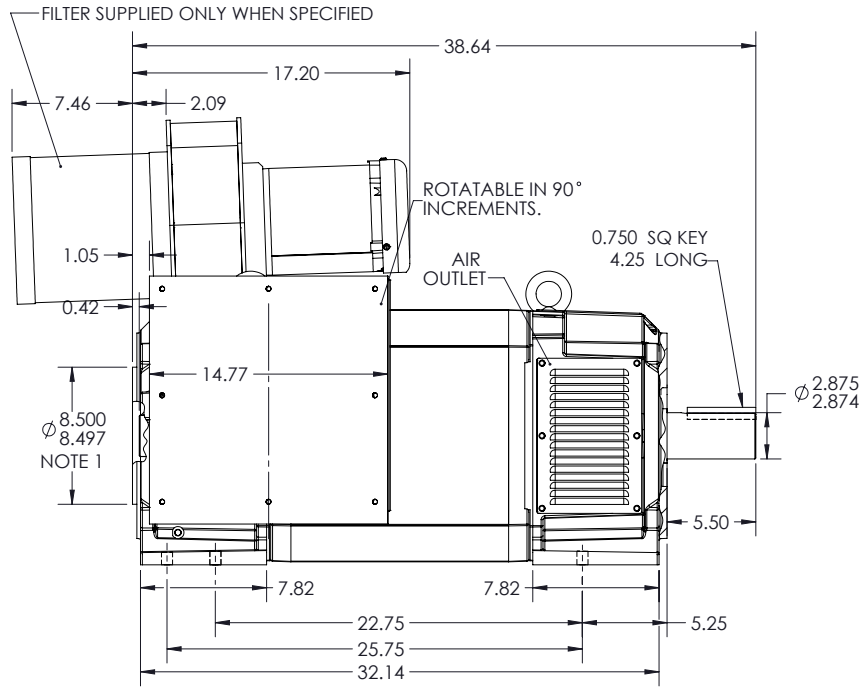

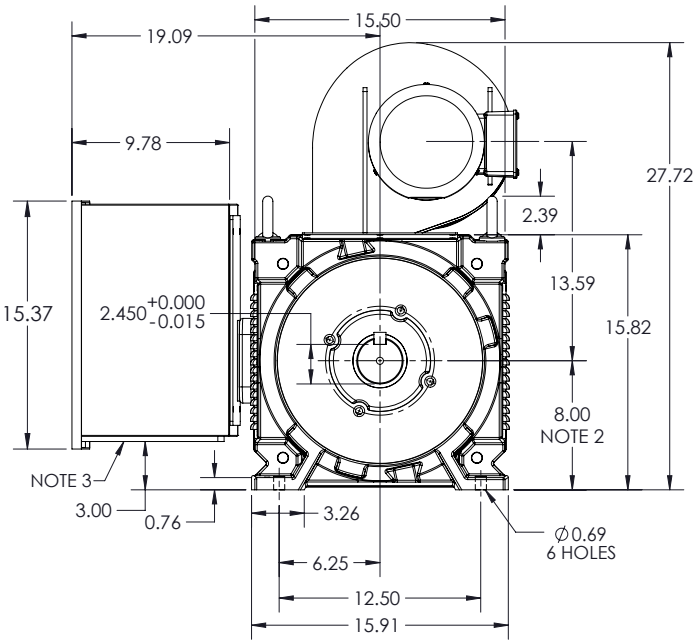

NOTE S:

1. O.D.E. C-FACE & TACHOMETER MOUNTING. 1/2-13 TAP, 1.00 DEEP, ON A ∅7.25 B.C. FACE RUNOUT AND ECCENTRICITY 0.004 MAX. T.I.R.
2. SHAFT HEIGHT WILL NOT BE EXCEEDED. SHIMS UP TO 0.06 INCHES IN THICKNESS ARE USUALLY REQUIRED FOR COUPLED OR GEARED MACHINES.
3. REMOVABLE COVER PLATE FOR CUSTOMER DRILLING.

- TERMINAL BOX MAY BE LOCATED F1, F2 OR F3, IF SPECIFIED.
- REFER TO 616779-51 FOR SPECIFIED TACHOMETER DIMENSIONS.
- BLOWER ASSEMBLY CAN BE LOCATED F1, F2, OR F3, IF SPEC'D.
- BLOWER ASSEMBLY AND TERMINAL BOX CANNOT BE LOCATED AT THE SAME POSITION.

DIMENSIONS ARE IN INCHES

MOTOR WEIGHT: 1320 LBS. (MAY VARY 15% FOR NON-STANDARD RATINGS AND / OR ACCESSORIES.)

CUSTOMER IS RESPONSIBLE FOR DETERMINING THAT BALDOR'S PRODUCT WILL PERFORM SUITABLY IN THE INTENDED APPLICATION

REV. DESC: ADD "URL" TO FRAME SIZE			
REV: C	VERSION: 03	REVISED: 01:47:22 04/06/2016	TDR: 000000973515
MODEL NO. 619691-001			REF: -
BY: RGGWT			B

BALDOR

DIM SHT,RL & URL3203Z,FOOTED,RPM-AC,DP FV

100-169619

422927–001

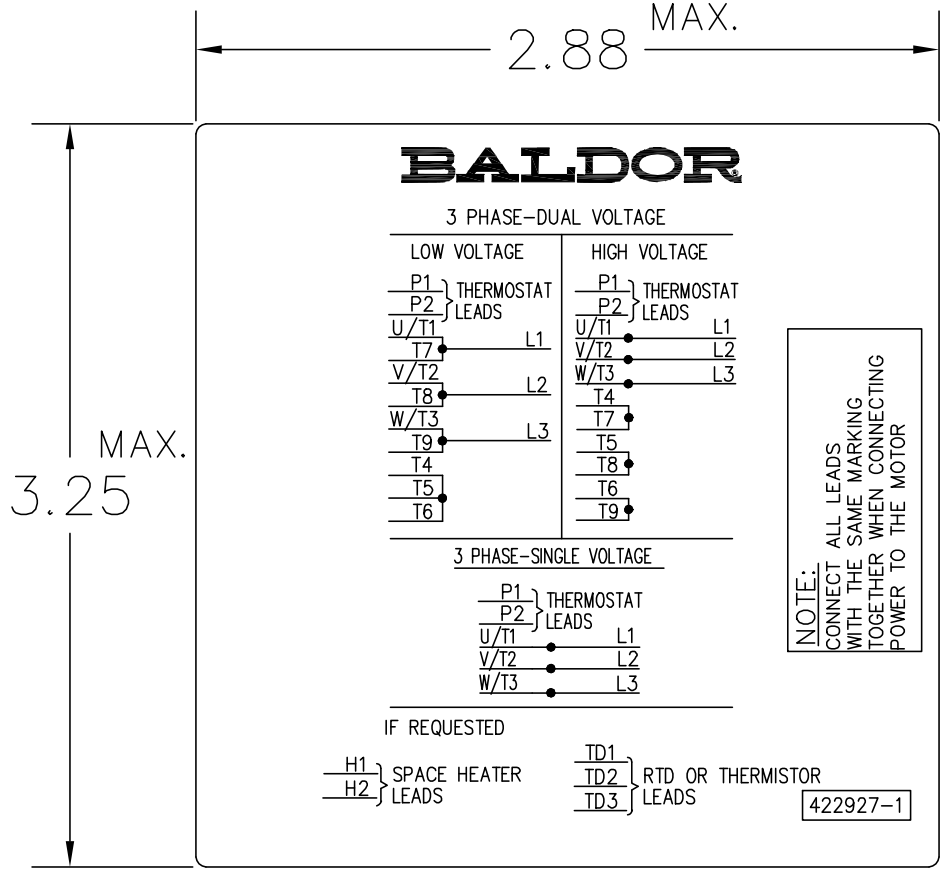

NOTE:
DATA TO BE SIZED SO THAT IT FITS INTO MATERIAL DECAL DIMENSIONS. MAKE LETTERS & NUMBERS AS LARGE AS POSIBLE.

MATERIAL: CERAMATIC DGF–P4 PERMA GRIP ADHESIVE

ALL LETTERS, NUMBERS AND LINES TO BE BLACK ON WHITE BACKGROUND.

422927–001

REV. DESC: CHANGE BACKGROUND COLOR FROM GOLD TO WHITE			BALDOR
REV. LTR: B	VERSION: 02	TDR: 000000788708	
FILE: \RGG\00000\203		REVISED: 08:09:29 03/04/2013	EXTERNAL CONNECTION LABEL
MTL: –		BY: RGGWT	SH 1 of 1