WPLEDS



Color: Bronze

Weight: 2.6 lbs

Project:	**Type:**
Prepared By:	**Date:**

Driver Info

Type	Constant
120V	0.10A/0.07A/0.05A
208V	0.07A/0.05A/0.03A
240V	0.06A/0.04A/0.03A
277V	0.05A/0.04A/0.03A
Input Watts	5.98-12.06W

LED Info

Watts	13/10/6W
Color Temp	3000/4000/5000K
Color Accuracy	83-84 CRI
L70 Lifespan	100,000 Hours
Lumens	833-1,720 lm
Efficacy	135.5-148.3 lm/W

Technical Specifications

Field Adjustability

Field Adjustable:
Field Adjustable Light Output:
13W/10W/6W (factory default: 10W)
Color temperature selectable by 3000K, 4000K and 5000K (factory default: 4000K)

Compliance

UL Listed:
Suitable for wet locations

Trade Agreements Act Compliant:
This product is a product of Cambodia and a "designated country" end product that complies with the Trade Agreements Act

DLC Listed:
This product is listed by Design Lights Consortium (DLC) as an ultra-efficient premium product that qualifies for the highest tier of rebates from DLC Member Utilities. Designed to meet DLC 5.1 requirements.
DLC Product Code: S-SL134D

Electrical

Driver:
13W: Constant Current, Class 2, 120-277V, 50/60 Hz,120V: 0.10A, 208V: 0.07A, 240V: 0.06A, 277V: 0.05A
10W: Constant Current, Class 2, 120-277V, 50/60 Hz,120V: 0.70A, 208V: 0.05A, 240V: 0.04A, 277V: 0.04A
6W: Constant Current, Class 2, 120-277V, 50/60 Hz,120V: 0.05A, 208V: 0.03A, 240V: 0.03A, 277V: 0.03A

Dimming Driver:
Driver includes dimming control wiring for 0-10V dimming systems. Requires separate 0-10V DC dimming circuit. Dims down to 10%.

THD:
4.02% at 120V, 14.83% at 277V

Power Factor:
99.5% at 120V, 92.1% at 277V

Photocell:
Integrated photocell included with on/off switch

Surge Protection:
L-L 2kV; L-G 4kV

Aux Power Supply:
No

Dim to Off:
Yes

Performance

Lifespan:
100,000-Hour LED lifespan based on IES LM-80 results and TM-21 calculations

Optical

BUG Rating:
13W: B1 U0 G1
10W: B0 U0 G1
6W: B0 U0 G1

LED Characteristics

LEDs:
Long-life, high-efficacy, surface-mount LEDs

Color Consistency:
7-step MacAdam Ellipse binning to achieve consistent fixture-to-fixture color

Color Uniformity:
RAB's range of Correlated Color Temperature follows the guidelines of the American National Standard for Specifications for the Chromaticity of Solid State Lighting (SSL) Products, ANSI C78.377-2017.

Copyright © 2025 RAB Lighting All Rights Reserved Note: Specifications are subject to change at any time without notice

Technical Specifications (continued)

Construction

Full Cutoff:
Allows for conformance to the IDA's fully shielding requirement, emitting no light above 90 degrees.

Housing:
Die-cast aluminum

Lens:
Acrylic lens

Reflector:
High reflection polycarbonate

Cold Weather Starting:
The minimum starting temperature is -40°C (-40°F)

Maximum Ambient Temperature:
Suitable for use in up to 40°C (104°F)

Green Technology:
Mercury and UV free. RoHS-compliant components.

Finish:
Formulated for high durability and long-lasting color

Installation

Mounting:
Integrated j-box and an optional wall plate included.

\

Other

Warranty:
RAB warrants that our LED products will be free from defects in materials and workmanship for a period of five (5) years from the date of delivery to the end user, including coverage of light output, color stability, driver performance and fixture finish. RAB's warranty is subject to all terms and conditions found at rablighting.com/warranty.

Copyright © 2025 RAB Lighting All Rights Reserved Note: Specifications are subject to change at any time without notice

Dimensions

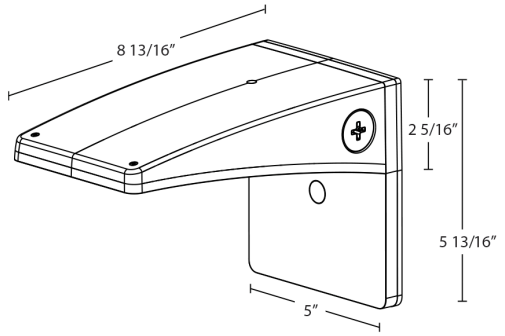

Features

- 100,000-Hour LED lifespan
- 0-10V dimming standard
- 5-Year, no-compromise warranty

Ordering Matrix

Family	Size/Wattage	Mounting	Color Temp	Finish	Driver	Options
WPLED	S					
	S = Small 13/10/6W **M =** Medium 32/24/16W	**Blank =** Integrated J-Box w/Optional Wall Plate Included	**Blank =** 3000/4000/5000K CCT Adjustable	**Blank =** Bronze **W =** White	**Blank =** 120-277V, 0-10V Dimming	**Blank =** Integrated Photocell **/E =** Battery Backup **/EC =** Cold Battery **/LCBS/MVS =** Lightcloud Blue w/MVS Sensor [1] **/LCBS/MVS/E =** Lightcloud Blue w/MVS Sensor & Battery Backup [1] **/LCBS/MVS/EC =** Lightcloud Blue w/MVS Sensor & Cold Battery [1]

[1] *Available on medium fixture only*

Copyright © 2025 RAB Lighting All Rights Reserved Note: Specifications are subject to change at any time without notice