ALEDXS



Color: Bronze

Weight: 3.9 lbs

Project:	Type:
Prepared By:	Date:

Driver Info

Type	Constant Current
120V	0.26A/0.19A/0.13A
208V	0.16A/0.12A/0.08A
240V	0.14A/0.10A/0.07A
277V	0.12A/0.09A/0.06A
Input Watts	14.8-31.2W

LED Info

Watts	32/24/16W
Color Temp	3000/4000/5000K
Color Accuracy	82-84 CRI
L70 Lifespan	100,000 Hours
Lumens	2,020-4,151 lm
Efficacy	123.8-148.5 lm/W

Technical Specifications

Field Adjustability

Field Adjustable:
Field Adjustable Light Output:
32W/24W/16W (factory default: 24W)
Color temperature selectable by 3000K, 4000K and 5000K (factory default: 4000K)

Compliance

UL Listed:
Suitable for wet locations

Electrical

Driver:
32W: Constant Current, Class 2, 120-277V, 50/60 Hz,120V: 0.26A, 208V: 0.16A, 240V: 0.14A, 277V: 0.12A
24W: Constant Current, Class 2, 120-277V, 50/60 Hz,120V: 0.19A, 208V: 0.12A, 240V: 0.10A, 277V: 0.09A
16W: Constant Current, Class 2, 120-277V, 50/60 Hz,120V: 0.13A, 208V: 0.08A, 240V: 0.07A, 277V: 0.06A

Dimming Driver:
Driver includes dimming control wiring for 0-10V dimming systems. Requires separate 0-10V DC dimming circuit. Dims down to 10%.

THD:
6.58% at 120V, 11.18% at 277V

Power Factor:
99.5% at 120V, 92.3% at 277V

Photocell:
Integrated photocell included with on/off switch

Surge Protection:
L-L 2 kV; L-G 4 kV

Aux Power Supply:
Yes

Dim to Off:
Yes

Performance

Lifespan:
100,000-Hour LED lifespan based on IES LM-80 results and TM-21 calculations

Optical

BUG Rating:
32W: B1 U0 G1
24W: B1 U0 G1
16W: B1 U0 G1

LED Characteristics

LEDs:
Long-life, high-efficacy, surface-mount LEDs

Color Consistency:
7-step MacAdam Ellipse binning to achieve consistent fixture-to-fixture color

Color Uniformity:
RAB's range of Correlated Color Temperature follows the guidelines of the American National Standard for Specifications for the Chromaticity of Solid State Lighting (SSL) Products, ANSI C78.377-2017.

Construction

Full Cutoff:
Allows for conformance to the IDA's fully shielding requirement, emitting no light above 90 degrees.

Housing:
Die-cast aluminum

Lens:
Acrylic lens

Reflector:
High reflection polycarbonate

Cold Weather Starting:
The minimum starting temperature is -40°F (-40°C)

Maximum Ambient Temperature:
Suitable for use in up to 104°F (40°C)

Copyright © 2025 RAB Lighting All Rights Reserved Note: Specifications are subject to change at any time without notice

Technical Specifications (continued)

Green Technology:
Mercury and UV free. RoHS-compliant components.

Effective Projected Area:
0.1

Finish:
Formulated for high durability and long-lasting color

Installation

Mounting:
Integrated j-box and an optional wall plate included.

Other

5-Year, No-Compromise Warranty:
RAB warrants that our LED products will be free from defects in materials and workmanship for a period of five (5) years from the date of delivery to the end user, including coverage of light output, color stability, driver performance and fixture finish. RAB's warranty is subject to all terms and conditions found at rablighting.com/warranty.

Dimensions

Copyright © 2025 RAB Lighting All Rights Reserved Note: Specifications are subject to change at any time without notice

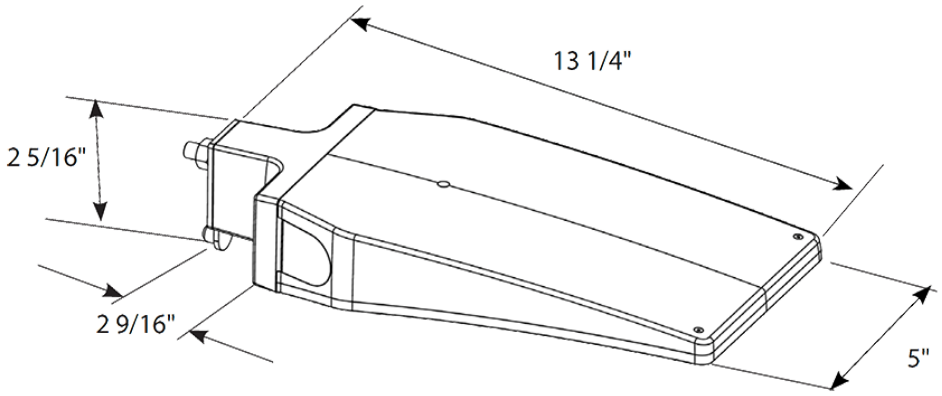

Ordering Matrix

Family	Size/Wattage	Color Temp	Finish	Driver	Options
ALED	XS				
	XXS = 13/10/6W **XS =** 32/24/16W **Blank =** 150/120/100W	**Blank =** 3000/4000/5000K CCT Adjustable	**Blank =** Bronze **W =** White	**Blank =** 120-277V, 0-10V Dimming	**Blank =** Integrated Photocell **/LCBS/MVS =** Lightcloud Blue w/ MVS Sensor

Copyright © 2025 RAB Lighting All Rights Reserved Note: Specifications are subject to change at any time without notice