GE...ES series

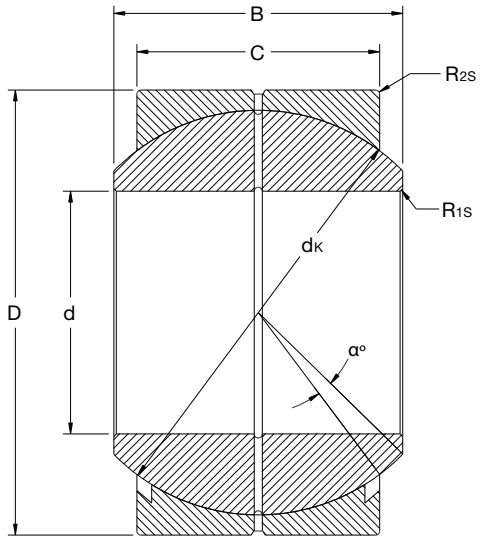

Part Number	Sealed Part Number	Dimensions (mm)								Load Rating (lbf)		Weight (lbs)
		d	D	B	C	d_K	R_{1S}	R_{2S}	α°	Dyn	Static	
GE6E		6	14	6	4	10	0.3	0.3	13	764	3822	0.009
GE8E		8	16	8	5	13			15	1236	6182	0.015
GE10E		10	19	9	6	16			12	1832	9105	0.024
GE12E		12	22	10	7	18			11	2428	12140	0.035
GE15ES	GE15ES 2RS	15	26	12	9	22			8	3822	19109	0.055
GE16ES	GE16ES 2RS	16	30	14	10	25			10	4766	23830	0.090
GE17ES	GE17ES 2RS	17	30	14	10	25			10	4766	23830	0.090
GE20ES	GE20ES 2RS	20	35	16	12	29	0.6		9	6744	32822	0.134
GE25ES	GE25ES 2RS	25	42	20	16	35.5		0.6	7	10791	53954	0.243
GE30ES	GE30ES 2RS	30	47	22	18	40.7			6	13938	69691	0.309
GE35ES	GE35ES 2RS	35	55	25	20	47		1.0	6	17985	89924	0.485
GE40ES	GE40ES 2RS	40	62	28	22	53			7	22481	112405	0.661
GE45ES	GE45ES 2RS	45	68	32	25	60			7	28551	143878	0.882
GE50ES	GE50ES 2RS	50	75	35	28	66	1.0		6	35070	175351	1.190
GE60ES	GE60ES 2RS	60	90	44	36	80			6	55078	274267	2.205
GE70ES	GE70ES 2RS	70	105	49	40	92			6	70815	350702	3.307
GE80ES	GE80ES 2RS	80	120	55	45	105			6	89924	449618	4.850
GE90ES	GE90ES 2RS	90	130	60	50	115			5	110156	550782	5.952
GE100ES	GE100ES 2RS	100	150	70	55	130			7	137133	685667	9.480
GE110ES	GE110ES 2RS	110	160	70	55	140			6	147250	730629	10.362
GE120ES	GE120ES 2RS	120	180	85	70	160			6	213569	1067843	17.637
GE140ES	GE140ES 2RS	140	210	90	70	180			7	242794	1213969	24.251
GE160ES	GE160ES 2RS	160	230	105	80	200			8	305740	1528701	30.865

Axis Bearings are a product of Baart Industrial Group (Baart). All Rights Reserved. ©2022
Baart has tried to ensure the accuracy of this document, but is not responsible for inaccuracies in, or changes to, the provided information.