Bridgeport Fittings Inc.
705 Lordship Blvd.
Stratford, CT 06615

Phone: 203-377-5944
Fax: 203-381-3488

Aluminum with/without Cover & Gasket

Images



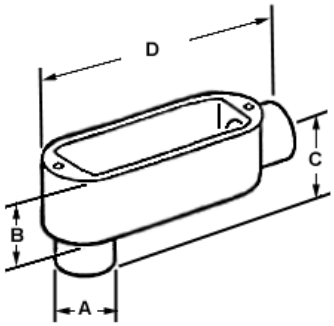

Download Photo Image Download Dimensional Image

Dimension A in Inches:	2-1/2
Dimension B in Inches:	2-1/2
Dimension C in Inches:	2-3/16
Dimension D in Inches:	7-9/16

Application

Threaded bodies for rigid conduit or IMC allows access for inspection, pulling and maintenance.

Product Information

Material:	Aluminum
Finish:	Enamel paint

Certifications & Codes:

Federal Specification Number:	W-C-586D
NEMA Standard:	FB-1
UL File Number:	E11077
UL Standard:	UL-514A
UNSPSC:	39131708

Catalog ID: LB-44

UPC Number: 781747041449

Description: Rigid and IMC Conduit Body, Type LB, Aluminum, Size 1 1/4 Inch

Application: Threaded bodies for rigid conduit or IMC allows access for inspection, pulling and maintenance.

Trade Size: 1-1/4"

Std Pkg Qty: 10

Unit Qty: 2