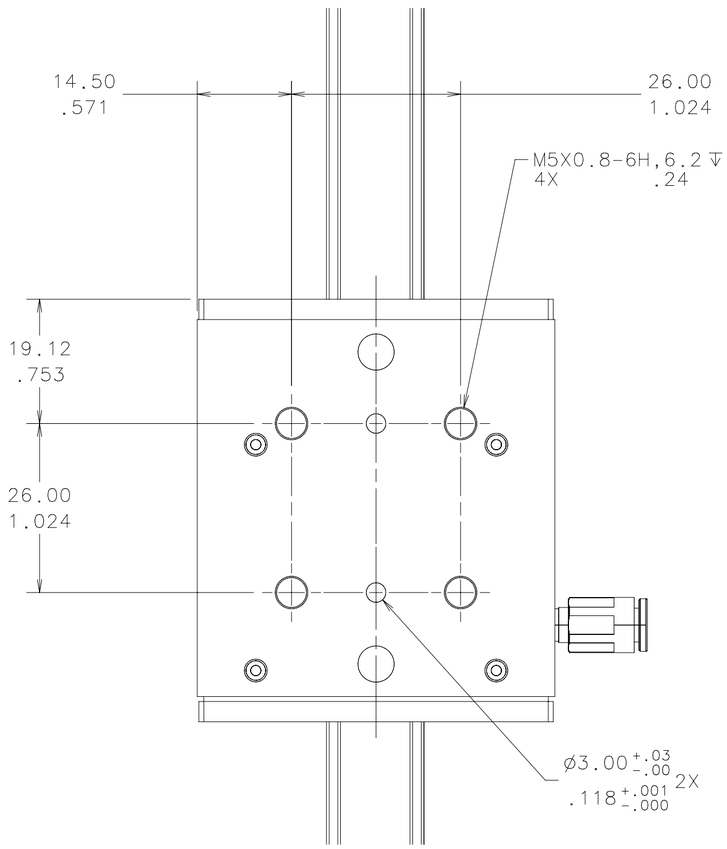

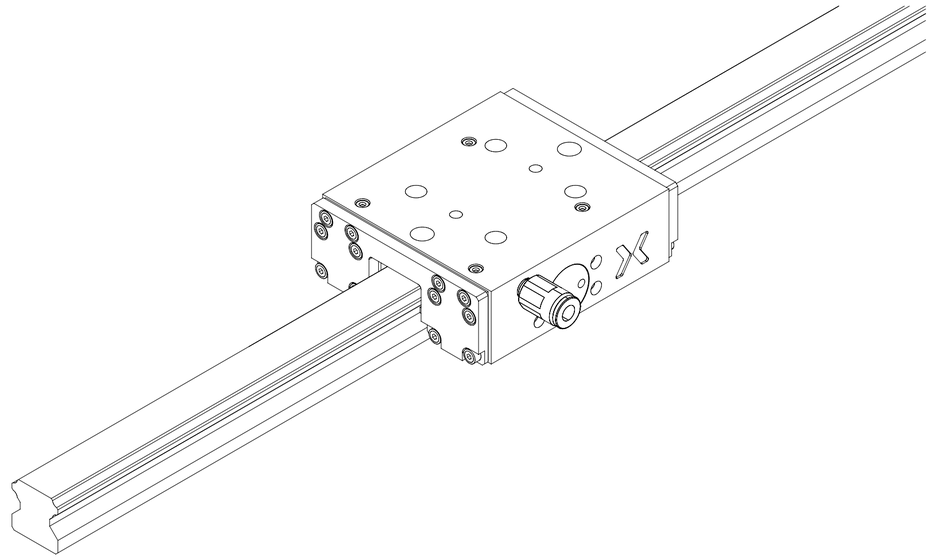

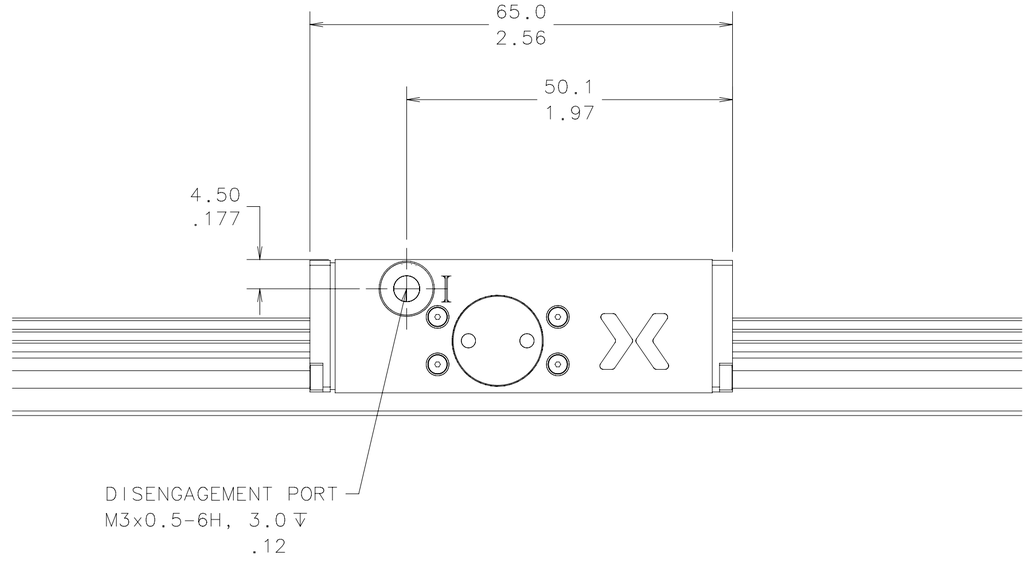

C-960135S

GEOMETRIC TOLERANCE VALUES	
MM	INCH
.013	.0005
.03	.001
.05	.002
.08	.003
.13	.005
.20	.008
.25	.010
.38	.015

THIRD ANGLE PROJECTION

SURFACE ROUGHNESS VALUES	
µm	µin
6.3	250
3.2	125
1.6	63
0.8	32
0.4	16
0.2	8

UNLESS OTHERWISE SPECIFIED

1. SURFACE TEXTURE: √
2. METRIC TOLERANCES: X ±0.8; .X ±0.5; .XX ±0.13
   INCH TOLERANCES: .XX ±.02; .XXX ±.005
3. ANGLES ±.5°
4. PRIMARY DIMENSIONS ARE IN MM SECONDARY DIMENSIONS ARE IN INCHES
5. REMOVE ALL BURRS AND SHARP EDGES
6. DO NOT SCALE DWG – WORK TO DIMS
7. PART MUST CONFORM TO ENGINEERING STANDARD WORK INSTRUCTIONS

nexen® Nexen Group, Inc.

TITLE GENERAL DIMENSIONS

MODEL RB15-S/P-S-THK-HSR

MATL		E	17631		10-31-06
MATL #		REV	ECO	ERO	DATE
DWN AJM	DATE 06-07-04	SCALE:3/2 X		WAS C-960135S-D	
CHKD CDV	DATE 06-09-04	SHEET 1 OF 1			REV
APVD AM	DATE 11-03-04	C-960135S			E