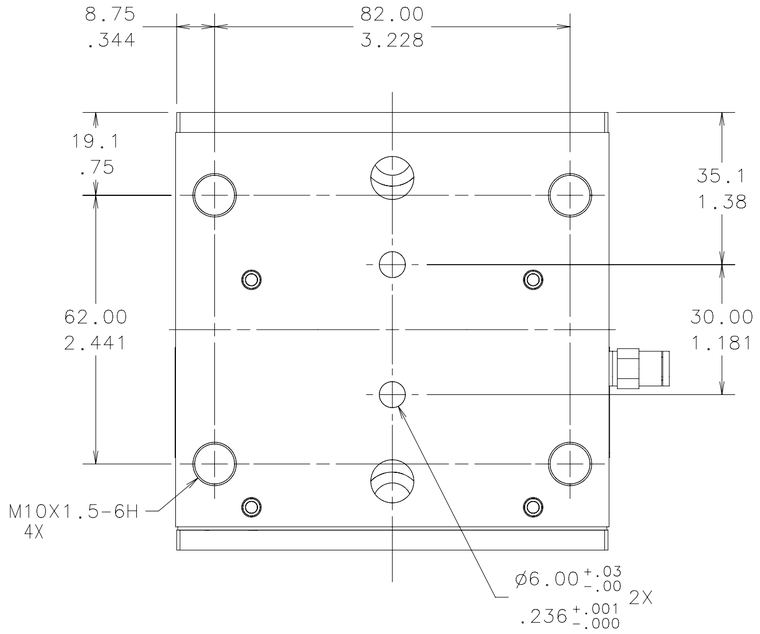

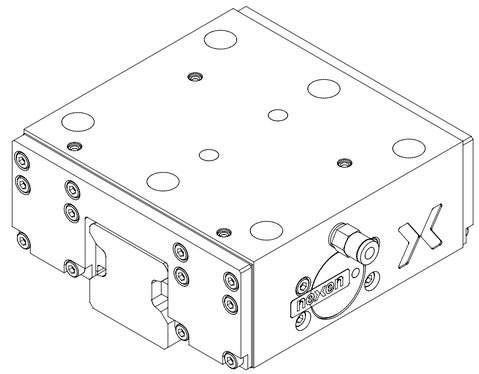

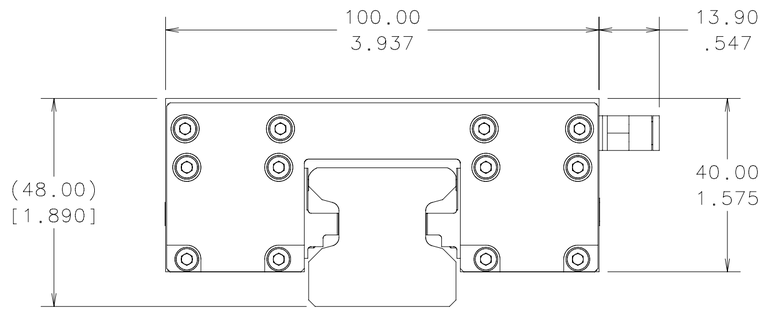

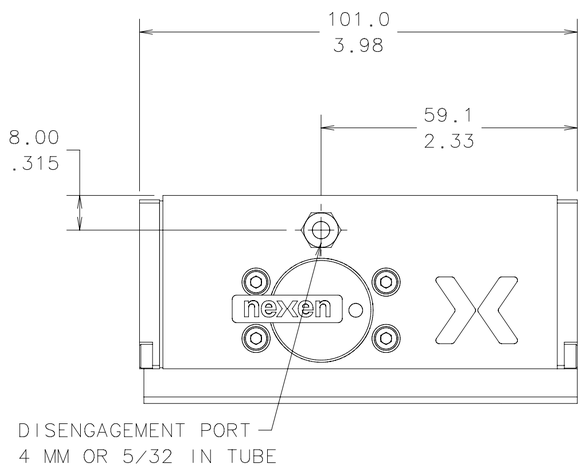

C-960173S

GEOMETRIC TOLERANCE VALUES	
MM	INCH
.013	.0005
.03	.001
.05	.002
.08	.003
.13	.005
.20	.008
.25	.010
.38	.015

THIRD ANGLE PROJECTION

SURFACE ROUGHNESS VALUES	
µm	µin
6.3	250
3.2	125
1.6	63
0.8	32
0.4	16
0.2	8

UNLESS OTHERWISE SPECIFIED

1. SURFACE TEXTURE: √
2. METRIC TOLERANCES: X ±0.8; .X ±0.5; .XX ±0.13
   INCH TOLERANCES: .XX ±.02; .XXX ±.005
3. ANGLES ±.5°
4. PRIMARY DIMENSIONS ARE IN MM
   SECONDARY DIMENSIONS ARE IN INCHES
5. REMOVE ALL BURRS AND SHARP EDGES
6. DO NOT SCALE DWG - WORK TO DIMS
7. PART MUST CONFORM TO ENGINEERING STANDARD WORK INSTRUCTIONS

nexen® Nexen Group, Inc.

TITLE GENERAL DIMENSIONS

MODEL RB35-S/P-S-IKO-LRX

MATL		D	18286		11-20-07
MATL #		REV	ECO	ERO	DATE
DWN JEH	DATE 12-15-04	SCALE:NONE	X	WAS C-960173S-C	
CHKD CDV	DATE 12-15-04	SHEET 1 OF 1			REV
APVD JMM	DATE 12-15-04	C-960173S			D