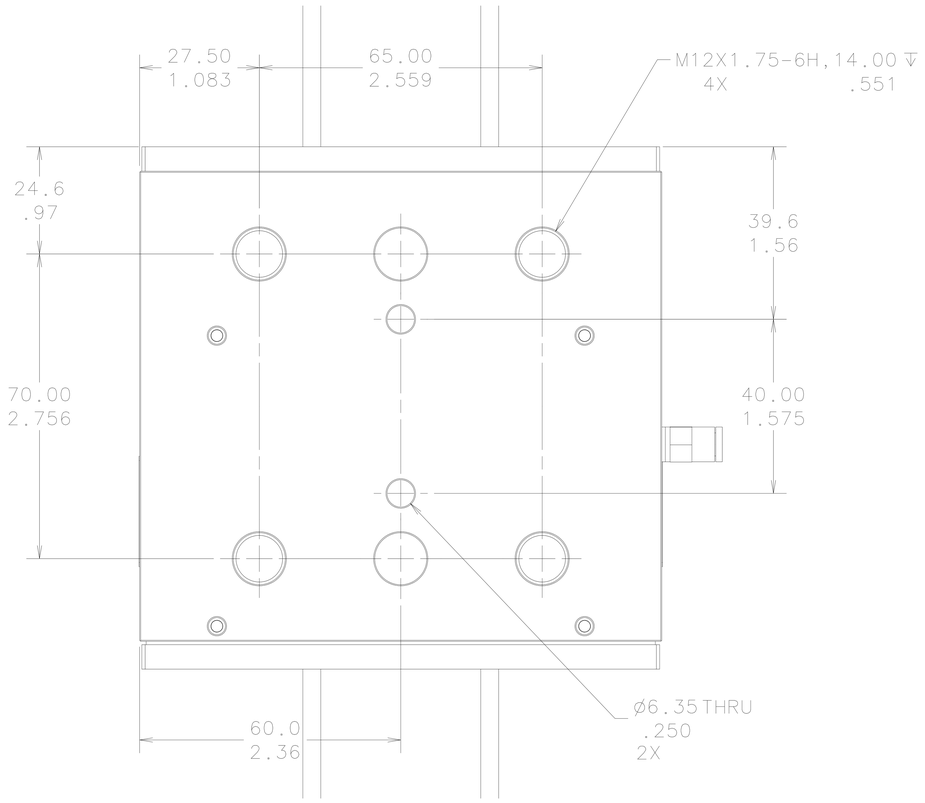

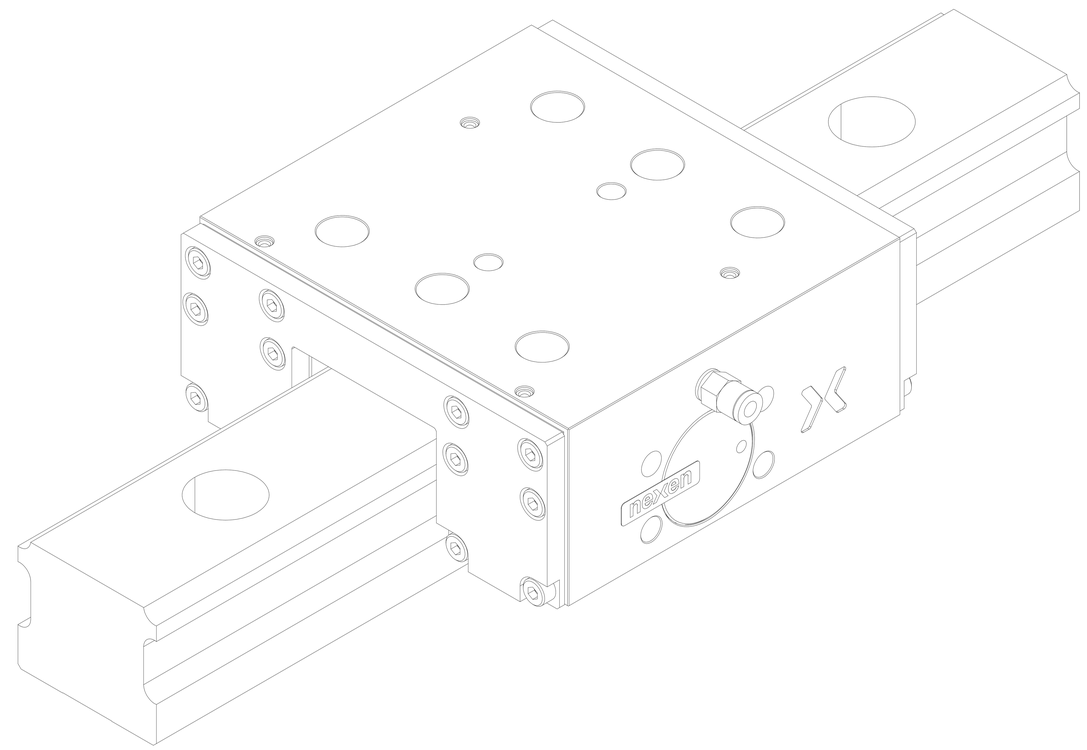

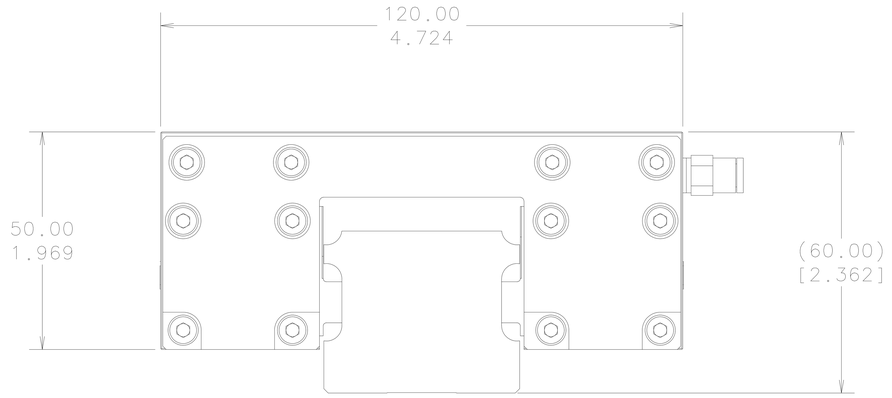

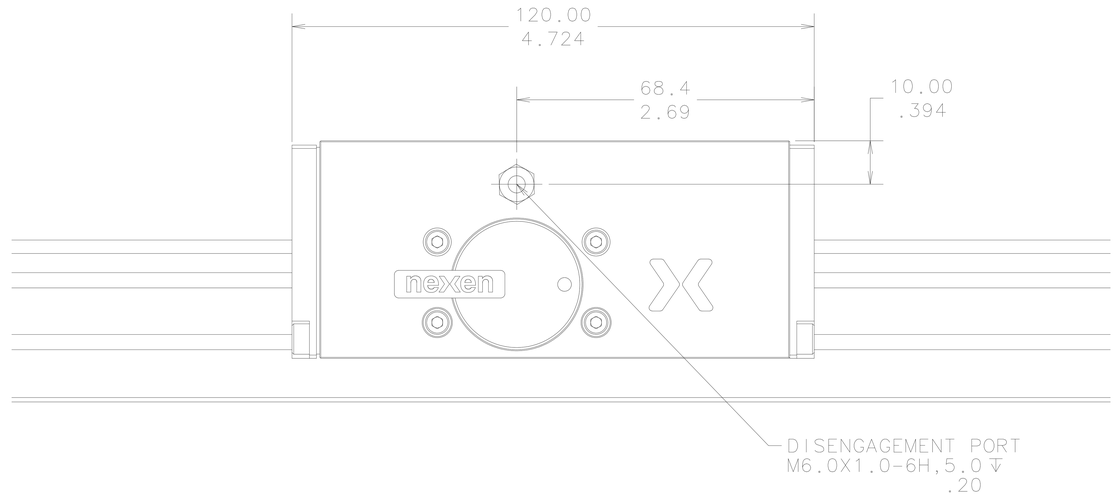

C-960194S

GEOMETRIC TOLERANCE VALUES	
MM	INCH
.013	.0005
.03	.001
.05	.002
.08	.003
.13	.005
.20	.008
.25	.010
.38	.015

THIRD ANGLE PROJECTION

SURFACE ROUGHNESS VALUES	
µm	µin
6.3	250
3.2	125
1.6	63
0.8	32
0.4	16
0.2	8

UNLESS OTHERWISE SPECIFIED

1. SURFACE TEXTURE: ▽ X
2. METRIC TOLERANCES: X ±0.8; .X ±0.5; .XX ±0.13
   INCH TOLERANCES: .XX ±.02; .XXX ±.005
3. ANGLES ±.5°
4. PRIMARY DIMENSIONS ARE IN MM
   SECONDARY DIMENSIONS ARE IN INCHES
5. REMOVE ALL BURRS AND SHARP EDGES
6. DO NOT SCALE DWG - WORK TO DIMS
7. PART MUST CONFORM TO ENGINEERING STANDARD WORK INSTRUCTIONS

nexen. Nexen Group, Inc.

TITLE GENERAL DIMENSIONS

MODEL RB45-S/P-S-INA-KUSE

MATL		B	17661		10-18-06
MATL #		REV	ECO	ERO	DATE
DWN JJH	DATE 01-24-06	SCALE:NONE		WAS C-960194S-A	
CHKD CDV	DATE 01-24-06	SHEET 1 OF 1			REV
APVD JJH	DATE 01-24-06	C-960194S			B