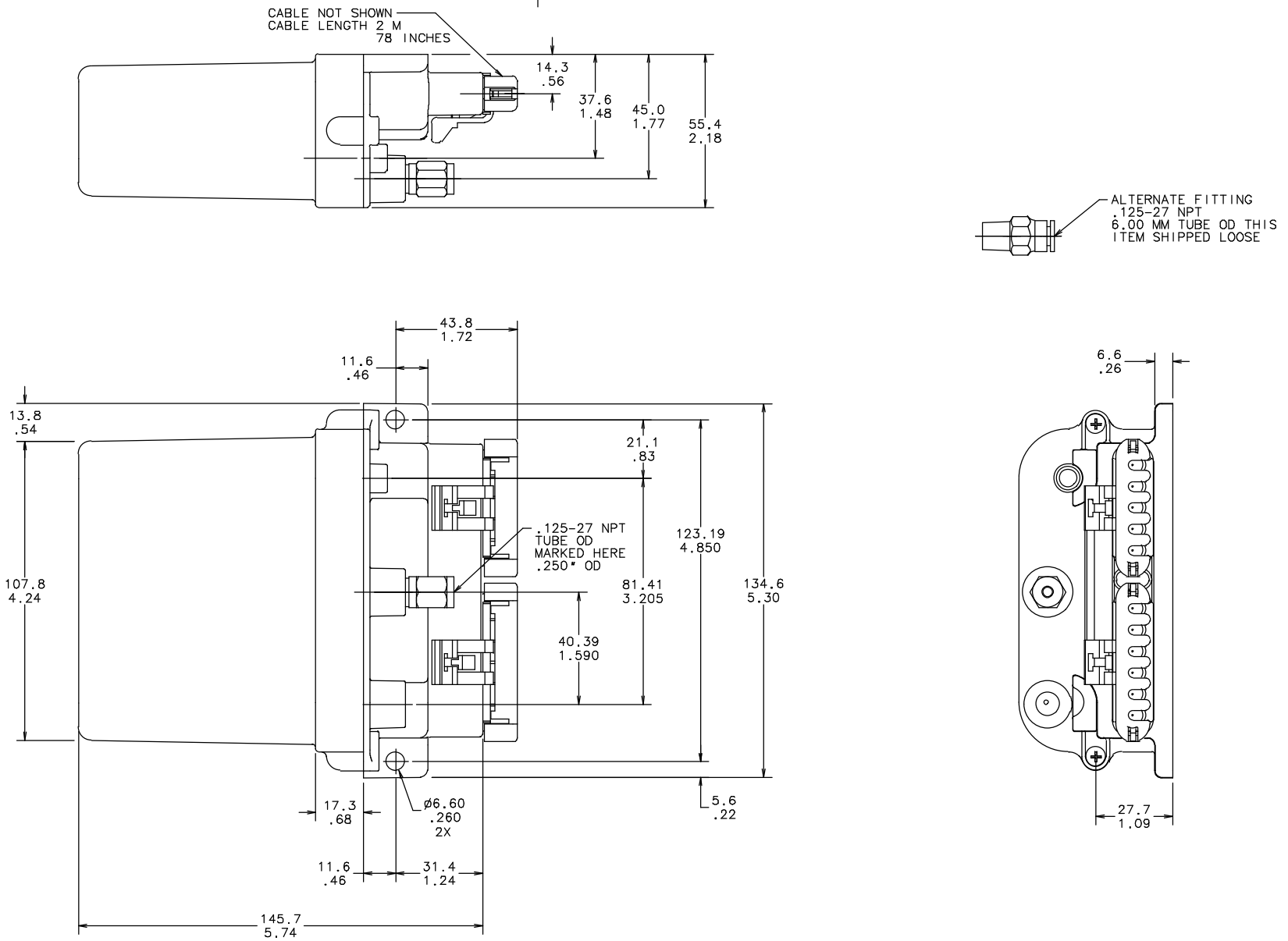

NOT SHOWN: COMMUNICATIONS CABLE
APPROXIMATE CABLE LENGTH 1.5M
59 INCHES

GEOMETRIC TOLERANCE VALUES	
MM	INCH
.013	.0005
.03	.001
.05	.002
.08	.003
.13	.005
.20	.008
.25	.010
.38	.015

THIRD ANGLE PROJECTION

SURFACE ROUGHNESS VALUES	
µm	µin
6.3	250
3.2	125
1.6	63
0.8	32
0.4	16
0.2	8

UNLESS OTHERWISE SPECIFIED

1. SURFACE TEXTURE: √
2. METRIC TOLERANCES: X ±0.8; .X ±0.5; .XX ±0.13
   INCH TOLERANCES: .XX ±.02; .XXX ±.005
3. ANGLES ±.5°
4. PRIMARY DIMENSIONS ARE IN MM
   SECONDARY DIMENSIONS ARE IN INCHES
5. REMOVE ALL BURRS AND SHARP EDGES
6. DO NOT SCALE DWG – WORK TO DIMS
7. PART MUST CONFORM TO ENGINEERING STANDARD WORK INSTRUCTIONS

nexen® Nexen Group, Inc.

TITLE GENERAL DIMENSIONS

MODEL RSD100P

MATL			E	17238	10-25-05
MATL #			REV	ECO	ERO DATE
DWN	CDV	DATE 05-02-02	SCALE: NONE		WAS C-964522S-D
CHKD	JEH	DATE 05-02-02	SHEET 1 OF 1		REV
APVD	BRB	DATE 05-02-02	C-964522S		E

C-964522S