GEN4 ION AIR GUN™ INSTALLATION & MAINTENANCE

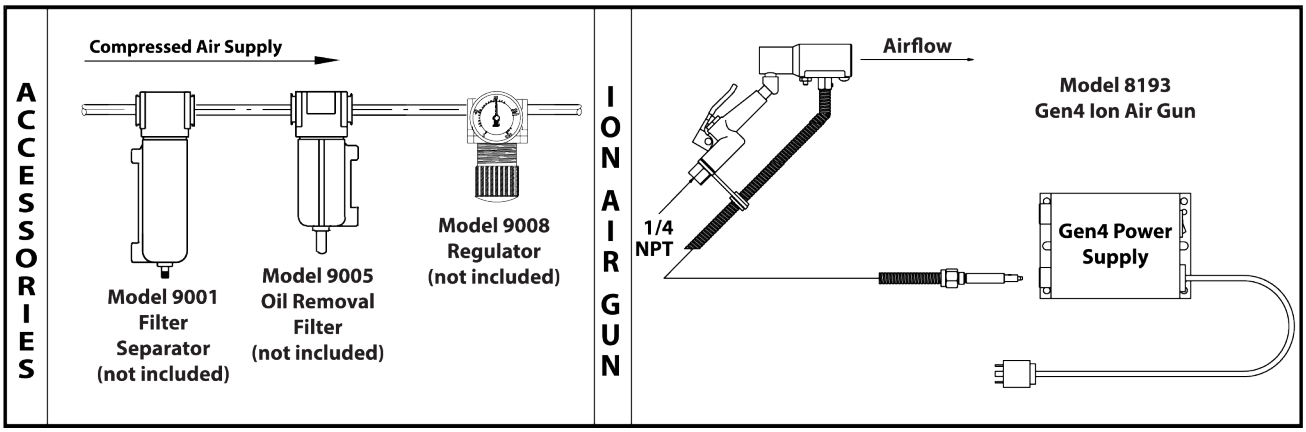

COMPRESSED AIR LINE SIZES

Compressed air lines should be sized to hold pressure drops to a minimum. When installing supply lines, use 1/4" pipe up to 25' (7.6m) long, 3/8" pipe up to 50' (15.2m) long. Compressed air hose (not included) should be 3/8" I.D. up to 10' (3m), 1/2" I.D. up to 25' (7.6m). Do not use restrictive fittings such as quick connects. They can “starve” the Gen4 Ion Air Gun by causing excessive line pressure drop.

COMPRESSED AIR SUPPLY

With proper filtration and separation of dirt, moisture and oil from the compressed air supply, the Gen4 Ion Air Gun will operate for years without clogging.

Use a 10 micron or smaller filter separator on the compressed air supply (Model 9001 Automatic Drain Filter Separator). To prevent problems associated with oil, use an oil removal filter (Model 9005 Oil Removal Filter). The oil removal filter should be used downstream from the automatic drain filter separator. Filters should be used close to each Gen4 Ion Air Gun, within 10 to 15' (3 to 4.6m) is best.

The Gen4 Ion Air Gun meets OSHA maximum dead-ended pressure requirements. It is designed to use normal shop air supplies of 5 to 100 PSIG (.3 to 6.9 BAR). For infinite control of flow and force, pressure may be regulated (Model 9008 Pressure Regulator).

USING THE GEN4 ION AIR GUN

Screw the bayonet connector of the high voltage power cable into the power supply. Make sure the hex swivel fitting is fully seated against the power supply terminal. Upon installation, the ionizer cable should be isolated from grounded metal surfaces by using non-conductive stand-offs/wire ties by at least 1″ of air gap. Alternatively, the ionizer cable can be shielded in plastic conduit with dielectric strength equivalent to at least 1″ of air (approximately 75kV/inch).

The Gen4 Ion Air Gun should be used at a point after the material has received its static charge. If the treated material is subjected to additional friction, it may build up another static charge and require additional ionization.

The Gen4 Ion Air Gun should be aimed so that the column of air flows across the material to be treated. The ionized air will eliminate the static charge from the surface it touches. Holding the Gen4 Ion Air Gun close to the surface will remove the charge rapidly and is ideal for smaller areas. When the static charge is extremely high, it may be necessary to ionize all surfaces of the part.

The ionizing point is shockless and may be touched without injury.

The Gen4 Ion Air Gun And Gen4 Power Supply Should Not Be Used In An Explosive Or Flammable Area.

 ©2026 EXAIR LLC 3/1/26

ELECTRICAL SUPPLY

The Model 7960 Power Supply (two outlet) and Model 7961 Power Supply (four outlet) require a 115V or 230V, 50/60Hz source. For proper operation, the Gen4 Ion Air Gun and Gen4 Power Supply must be properly grounded. If the unit is not grounded, the Gen4 Ion Air Gun will produce a shock and will not function properly. The hex swivel fitting on the Gen4 Ion Air Gun must be fully seated against the power supply terminal.

TROUBLESHOOTING & MAINTENANCE

If There Is A Reduction In Flow Or Force From The Gen4 Ion Air Gun, check the pressure by installing a gauge at the compressed air inlet of the Gen4 Ion Air Gun. Large pressure drops are possible due to undersized lines, restrictive fittings and clogged filter elements.

For replacement or repair filter and regulator parts, contact EXAIR at 1-800-903-9247 or techelp@exair.com. Call (513) 671-3322 for outside the US and Canada.

CLEANING

The best method to determine how well the Gen4 Ion Air Gun is working is with the Model 7905 Static Meter. The static meter is easy to use and will accurately display the charge on a surface without touching it. To do this, simply measure the charge on the surface before ionizing (power supply and air off). Then, ionize the surface (power supply and air on). Measure the surface again. A "zero" volt reading indicates that the Gen4 Ion Air Gun is working properly. If a charge is still present, this may indicate the need for cleaning.

Accumulation of light dust or dirt on the surface of the ionizing point will degrade the effectiveness of the ionizer. A simple cleaning operation added to your planned maintenance schedule can eliminate this potential performance problem. The frequency of cleaning required will depend upon the environment in which the ionizer is installed. Dirty industrial environments may require daily cleaning, while clean-room applications may require only monthly cleaning. It is important to evaluate the cleaning needs of each individual ionizer installation.

A dull or dirty emitter point will eventually cease to operate. The ionizing point can be cleaned with a small brush. Replacements are available for worn or damaged emitter points.

Never Clean An Ionizer With The Power On!

Periodic cleaning will keep the ionizer operating at peak performance for the life of the unit.

If you have any questions or problems, please contact an EXAIR Application Engineer at:

Toll Free: 1-800-903-9247 (U.S. & Canada)
Telephone: 513 671-3322 outside of U.S. & Canada
Toll Free Fax: 866-329-3924 (U.S. & Canada)
FAX: 513 671-3363 outside of U.S. & Canada
E-mail: techelp@exair.com
Website: www.exair.com

EXAIR Gen4 Ion Air Gun and Gen4 Power Supply are UL Component Recognized to U.S. and Canadian safety standards and meet the requirements of applicable European Directive(s).

For more information about this product, visit "Frequently Asked Questions" FAQ at EXAIR.com

 ©2026 EXAIR LLC 3/1/26