C-WALLM



Color: Bronze

Weight: 5.2 lbs

Project:	**Type:**
Prepared By:	**Date:**

Driver Info

Type	Constant
120V	0.63A/0.50A/0.33A
208V	0.36A/0.29A/0.21A
240V	0.31A/0.25A/0.18A
277V	0.28A/0.23A/0.16A
Input Watts	39.1-75.2W

LED Info

Watts	75/60/40W
Color Temp	3000/4000/5000K
Color Accuracy	81-84 CRI
L70 Lifespan	100,000 Hours
Lumens	5279-10383 lm
Efficacy	125.4-147.4 lm/W

Technical Specifications

Field Adjustability

Field Adjustable:
Field Adjustable Light Output:
75/60/40W (factory default: 60W)
Color temperature selectable by 3000K, 4000K and 5000K (factory default: 4000K)

Compliance

UL Listed:
Suitable for wet locations

DLC Listed:
This product family is listed with the DesignLights Consortium (DLC). Individual SKUs within this family may carry either a DLC Standard or DLC Premium qualification. Please refer to the individual product specification sheet or the DLC Qualified Products List (QPL) at designlights.org to confirm the qualification status of a specific SKU prior to specification or purchase.

Trade Agreements Act Compliant:
This product is a product of Cambodia and a "designated country" end product that complies with the Trade Agreements Act

Electrical

Driver:
Constant Current, Class II, 120-277V, 50/60 Hz:
75W: 120V: 0.63A, 208V: 0.37A, 240V: 0.32A, 277V: 0.28A
60W: 120V: 0.51A, 208V: 0.30A, 240V: 0.25A, 277V: 0.23A
40W: 120V: 0.33A, 208V: 0.20A, 240V: 0.18A, 277V: 0.16A

Dimming Driver:
Driver includes dimming control wiring for 0-10V dimming systems. Requires separate 0-10V DC dimming circuit. Dims down to 10%.

Aux Power Supply:
Yes

Dim to Off:
Yes

Photocell:
Integrated photocell included with on/off switch

Surge Protection:
4 kV

Performance

Lifespan:
100,000-Hour LED lifespan based on IESlm-80 results and TM-21 calculations

LED Characteristics

LEDs:
Long-life, high-efficacy, surface-mount LEDs

Color Consistency:
7-step MacAdam Ellipse binning to achieve consistent fixture-to-fixture color

Color Uniformity:
RAB's range of Correlated Color Temperature follows the guidelines of the American National Standard for Specifications for the Chromaticity of Solid State Lighting (SSL) Products, ANSI C78.377-2017.

Construction

Housing:
Recycled aluminum and sheet metal

Lens:
Bio-based Polymethy Methacrylate (PMMA) lens

Reflector/Tray:
Aluminum

Gaskets:
High-temperature silicone

Cold Weather Starting:
The minimum starting temperature is -40°F (-40°C)

Copyright © 2026 RAB Lighting All Rights Reserved Note: Specifications are subject to change at any time without notice

Technical Specifications (continued)

Maximum Ambient Temperature:
Suitable for use in up to 104°F (40°C)

Green Technology:
Mercury and UV free. RoHS-compliant components.

Finish:
Formulated for high durability and long-lasting color

Installation

Mounting:
Surface mount for recessed junction box; 3 conduit entry points

Other

5-Year, No-Compromise Warranty:
RAB warrants that our LED products will be free from defects in materials and workmanship for a period of five (5) years from the date of delivery to the end user, including coverage of light output, color stability, driver performance and fixture finish. RAB's warranty is subject to all terms and conditions found at rablighting.com/warranty.

Dimensions

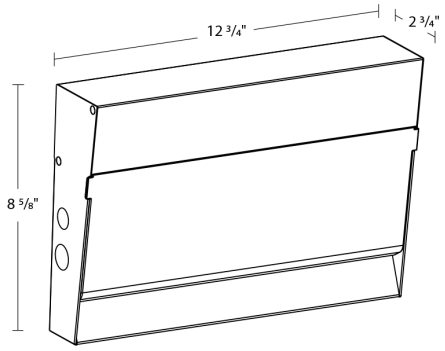

Features

- 100,000-hour LED Life
- 120-277V
- DLC Premium listed models
- Compatible with RAB specified 0-10V dimming system
- 5-Year, no-compromise warranty

Ordering Matrix

Family	Wattage	Color Temp	Finish	Driver	Controls
C-WALL	M				
	S = 32/25/17W **M =** 75/60/40W **L =** 125/100/65W	**Blank =** 3000/4000/5000K CCT Adjustable	**Blank =** Bronze	**Blank =** 120-277V, 0-10V Dimming	**Blank =** Integrated On/Off Photocell **/LCB =** Lightcloud Blue

Copyright © 2026 RAB Lighting All Rights Reserved Note: Specifications are subject to change at any time without notice