Toggle Specification Grade Commercial Series
20A, 120/277V AC

Description	Toggle Color	Single Pole	Three Way
Toggle, spring termination.	Black	CSB120STBK	CSB320STBK
	Brown	CSB120ST	CSB320ST
	Gray	CSB120STGY	CSB320STGY
	Ivory	CSB120STI	CSB320STI
	Light Almond	CSB120STLA	CSB320STLA
	Red	CSB120STR	CSB320STR
	White	CSB120STW	CSB320STW

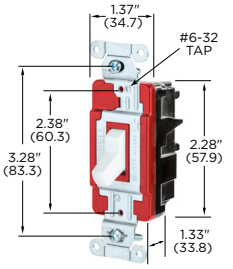

CSB120STW

EdgeConnect Style Line® Decorator Specification Grade Commercial Series
15A, 120/277V AC

Description	Toggle Color	Single Pole	Three Way
Nylon toggle, spring termination.	Black	DS115STBK	DS315STBK
	Brown	DS115ST	DS315ST
	Gray	DS115STGY	DS315STGY
	Ivory	DS115STI	DS315STI
	Light Almond	DS115STLA	DS315STLA
	Red	DS115STR	DS315STR
	White	DS115STW	DS315STW

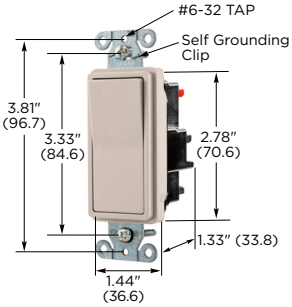

DS115STLA

20A, 120/277V AC

Description	Toggle Color	Single Pole	Three Way
Rocker, spring termination.	Black	DS120STBK	DS320STBK
	Brown	DS120ST	DS320ST
	Gray	DS120STGY	DS320STGY
	Ivory	DS120STI	DS320STI
	Light Almond	DS120STLA	DS320STLA
	Red	DS120STR	DS320STR
	White	DS120STW	DS320STW

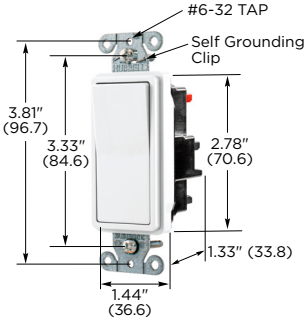

DS320STW

EdgeConnect Style Line® Decorator Specification Grade Commercial Series
Illuminated, Light ON with Load OFF
20A, 120/277V AC

Description	Toggle Color	Single Pole	Three Way
Rocker, with blue LED, spring termination.	Black	DS120STILBK	DS320STILBK
	Brown	DS120STIL	DS320STIL
	Gray	DS120STILGY	DS320STILGY
	Ivory	DS120STILI	DS320STILI
	Light Almond	DS120STILLA	DS320STILLA
	Red	DS120STILR	DS320STILR
	White	DS120STILW	DS320STILW

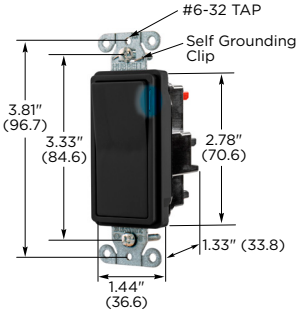

DS320STILBK

Dimensions in Inches (mm)