ELX



Color: Clear

Weight: 4.7 lbs

Project:	**Type:**
Prepared By:	**Date:**

Technical Specifications

Performance

Product Type:
Chicago-Approved Edge-Lit Exit Sign

Description:
Chicago-approved edge-lit exit sign with a single face, red letters, and 90 minutes of emergency battery backup.

Input Wattage:
4.5W @120V; 4.9W @277V

Electrical

Power Factor:
≥0.9

Input Voltage:
Dual 120/277 Voltage

Operating Frequency (Hz):
60Hz

Input Current @ 120V (mA):
42mA

Input Current @ 277V (mA):
20mA

Dual Voltage Circuit Operation:
No

Operating Temperature:
32°F to 122°F (0°C to 50°C)

Battery Type:
Nickel Cadmium

Storage Temperature:
68°F to 86°F (20°C to 30°C)

Storage Shelf Life:
3 years before the initial charge. 5 years after initial charge.

Self Diagnostics:
No, manual test only

Remote Test Switch:
No

Emergency Characteristics

Emergency Illumination:
120 minutes

Battery Backup:
Yes

Battery Voltage:
4.8V

Recharge Time Required:
24-hours

Battery Operating Temperature:
0°F to 50°F (32°C to 122°C)

Installation

Mounting Method:
Back/Top/End

Mounting Type:
Wall/Ceiling Mount

Cold Weather Rated:
No

Construction

Shape:
Rectangle

Housing Material:
Aluminum

Panel Material:
Acrylic

Panel Color:
White

Letter Color:
Red

Housing Color:
Aluminum

Copyright © 2026 RAB Lighting All Rights Reserved Note: Specifications are subject to change at any time without notice

Technical Specifications (continued)

Number of Faces:
Single Face

Arrow Direction:
Double Arrow

Arrow Material:
Screen Print

Sign Format:
Edge-lit

Remote Capacity:
No

Compliance

Listings:
UL924 Listed, NFPA 101 (current Life Safety Code), NEC and OSHA illumination standards

Environment:
Suitable for indoor use in dry and damp environments

IP Rating:
Indoor

Certification Model Number:
CAELXTEU1RWAEM-DA

T20 Compliant:
Can be used to conform with the requirements of California Title 20

California Title 24 JA8 Compliant:
Not applicable

California Energy Commission (CEC) Status:
Lawful for Sales in California

City Compliance:
Chicago Approved

FCC:
Complies with Part 15 of the FCC Rules

Other

5-Year, No-Compromise Warranty:
RAB warrants that our LED products will be free from defects in materials and workmanship for a period of five (5) years from the date of delivery to the end user, including coverage of light output, color stability, driver performance and fixture finish. RAB's warranty is subject to all terms and conditions found at rablighting.com/warranty.
Battery is prorated.

Copyright © 2026 RAB Lighting All Rights Reserved Note: Specifications are subject to change at any time without notice

Dimensions

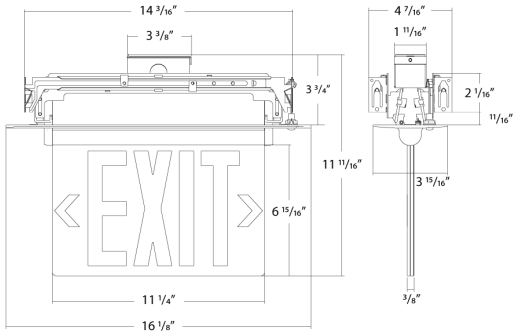

Features

- Single-face edge-lit exit sign with clear acrylic panel
- White thermoplastic housing, 5VA flame rating, impact- and scratch-resistant
- Red or green letters, selectable by dip switch
- Hardware included for surface wall, ceiling, end and recessed mounting; panel swivels 0-180°
- 90-minute battery backup with integrated test switch and charge indicator

Ordering Matrix

Family	Model	Panel	Letter Color	Housing Finish
ELX				
	Blank = Standard Thermoplastic **NYC =** Aluminum NYC Compliant	**Blank =** Clear Panel, Single Face **MP =** Mirror Panel, Double Face	**Blank =** Red or Green Selectable **Blank =** Red only	**Blank =** White **Blank =** Brushed Aluminum

Copyright © 2026 RAB Lighting All Rights Reserved Note: Specifications are subject to change at any time without notice