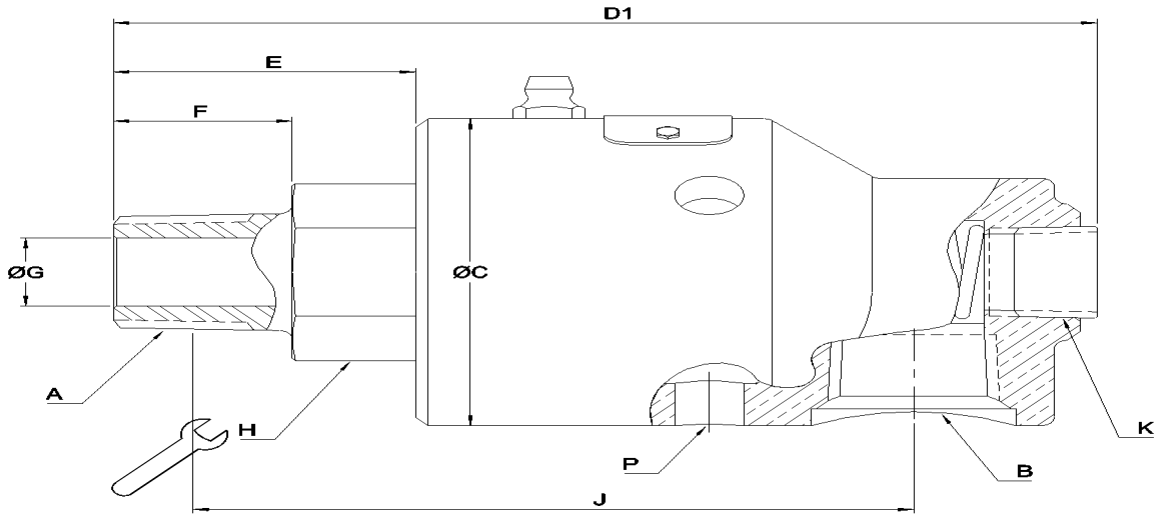

A	1-3/4"-12 UN RH
B	1-1/4"-11.5 NPT
C	3.563"
C	90.5 mm
D1	7.559"
D1	192 mm
E	2.244"
E	57 mm
F	1.185"
F	30.1 mm
G	1.26"
G	32 mm
H	1.732"
H	44 mm
J	119 mm
J	4.685"
K	1"-11.5 NPT
P	Non-Threaded