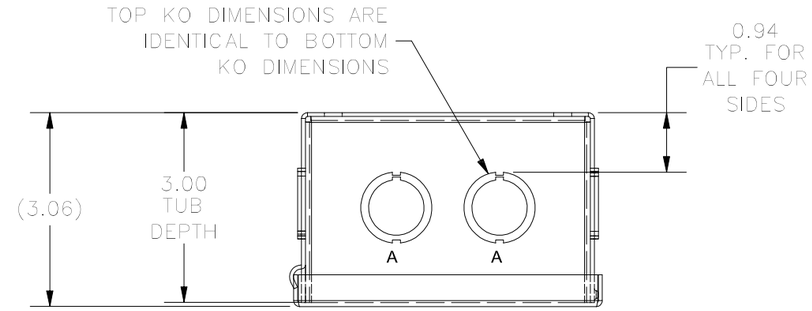

TOP VIEW

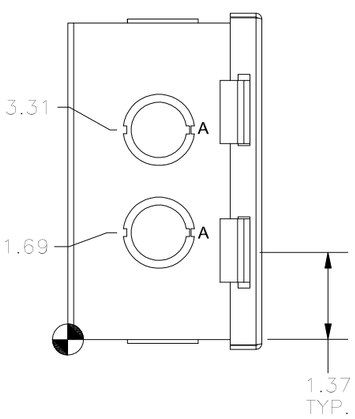

LEFT SIDE VIEW

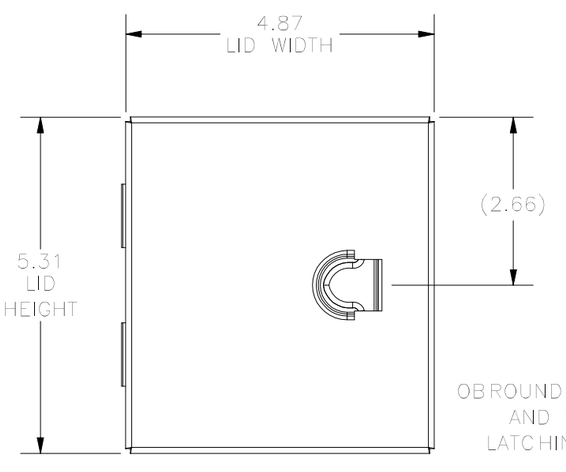

FRONT VIEW

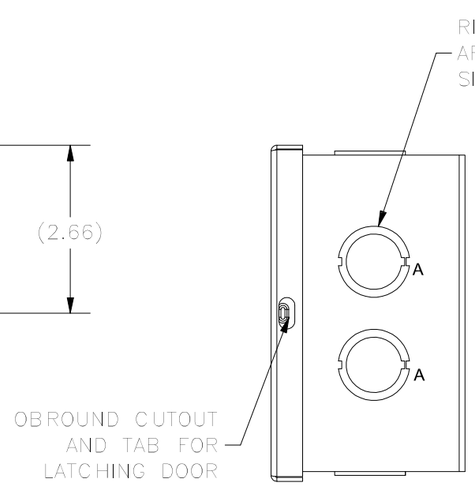

RIGHT SIDE VIEW

BOTTOM VIEW

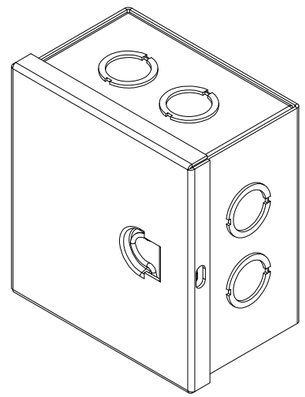

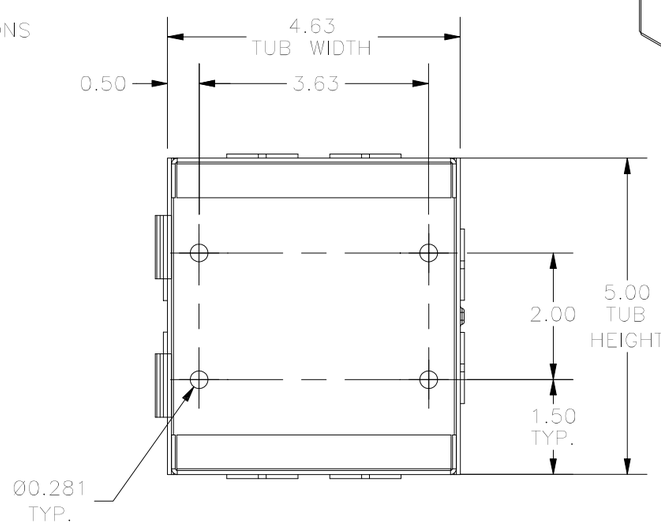

FRONT VIEW LID REMOVED

KNOCKOUT TABLE	
SIZE	DESCRIPTION
A	1/2" TO 3/4"

PART#: A040503
(DATA SUBJECT TO CHANGE WITHOUT NOTICE)

THIS DRAWING IS PROPERTY OF HUBBELL INC. WIEGMANN
ALL INFORMATION IS PROPRIETARY AND NOT TO BE DUPLICATED