

TOP VIEW

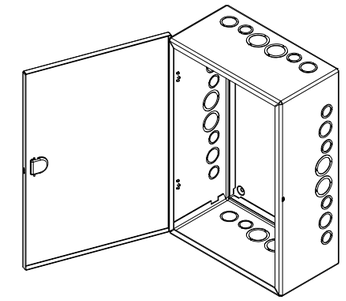

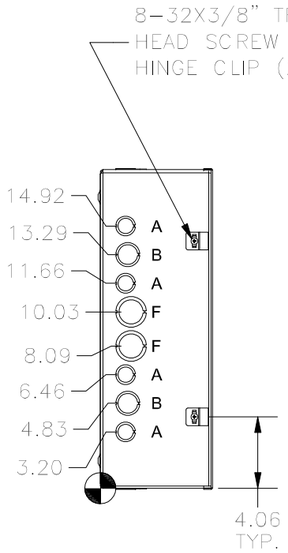

LEFT SIDE VIEW

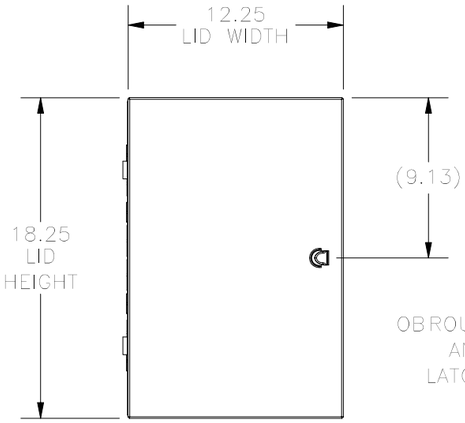

FRONT VIEW

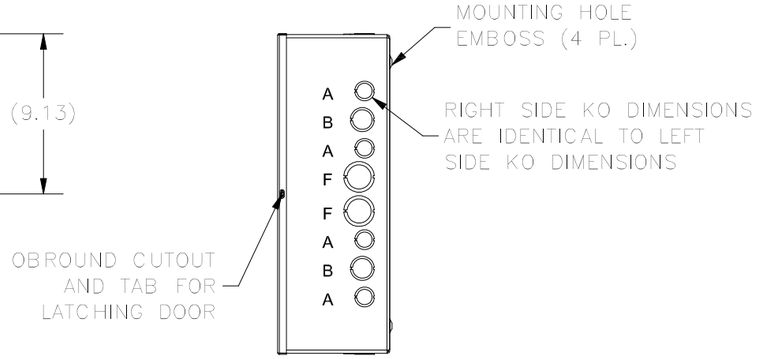

RIGHT SIDE VIEW

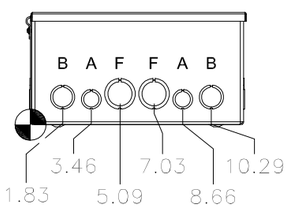

BOTTOM VIEW

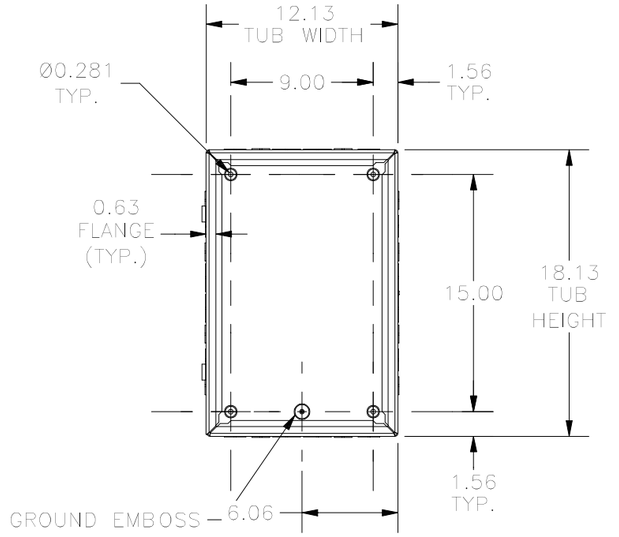

FRONT VIEW LID REMOVED

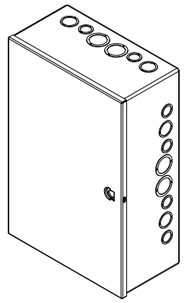

KNOCKOUT TABLE	
SIZE	DESCRIPTION
A	1/2" TO 3/4"
B	3/4 TO 1"
F	1" TO 1-1/4"

PART#: A121806
(DATA SUBJECT TO CHANGE WITHOUT NOTICE)

THIS DRAWING IS PROPERTY OF HUBBELL INC. WIEGMANN
ALL INFORMATION IS PROPRIETARY AND NOT TO BE DUPLICATED