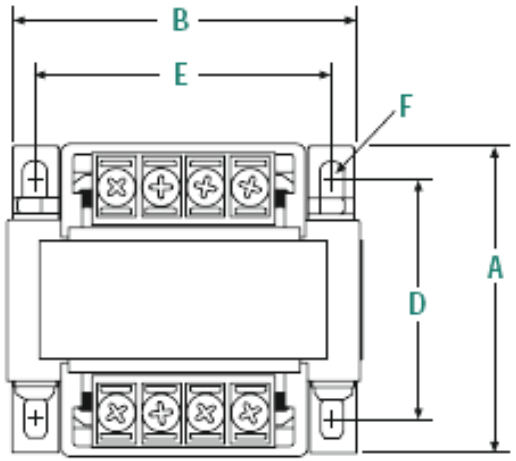


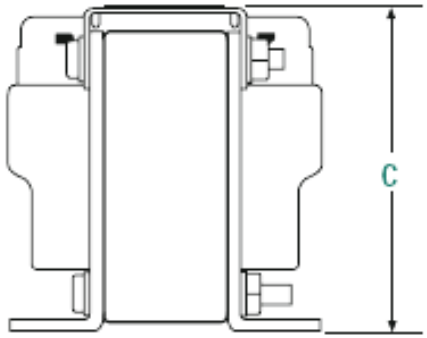


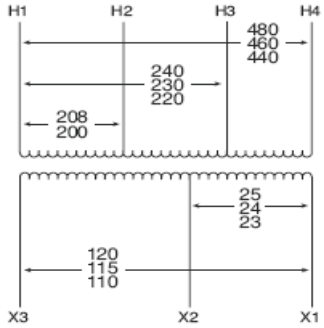


## FUSE KITS & ACCESSORIES

| CATALOG NUMBER | VA | DESCRIPTION | APPROX. SHIPPING WT. (Lbs./Kg.) |
|---|---|---|---|
| PL-79920 | 50-750 | Fuse Kit: Primary Fuse Block EIC Series (2 Class CC Blocks) | 1.0 (0.5) |
| PL-79921 | 150-750 | Fuse Kit: Primary & Secondary Fuse Block EIC Series (2 Class CC and 1 Midget Blocks) | 1.0 (0.5) |
| PL-79922 | 50-750 | Fuse Kit: Primary Fuse Block EIC Series CE Listed w/ Covers (2 Class CC Blocks) | 1.0 (0.5) |
| PL-79923 | 150-750 | Fuse Kit: Primary & Secondary Fuse Block EIC Series CE Listed w/ Covers (2 Class CC and 1 Midget Blocks) | 1.0 (0.5) |
| PL-79924 | | Fuse Kit: Secondary Fuse 1/4" x 1-1/4" w/ARM | 1.0 (0.5) |
| PL-79925 | 50 – 350 | Cover: Small Terminal Covers (Qty. 2) | 1.0 (0.5) |
| PL-79926 | 500 & 750 | Cover: Large Terminal Covers (Qty. 2) | 1.0 (0.5) |
| PL-79927 | | Cover: Fuse Block Covers (Qty. 1) | 1.0 (0.5) |
| PL-79928 | 50 – 350 | Link: Small Jumper Links (Qty. 2) | 1.0 (0.5) |
| PL-79929 | 500 & 750 | Link: Large Jumper Links (Qty. 2) | 1.0 (0.5) |
| PL-79930 | 50 – 350 | Fuse Kit: Secondary Fuse Midget w/ARM | 1.0 (0.5) |
| PL-79931 | 500 & 750 | Fuse Kit: Secondary Fuse Midget w/ARM | 1.0 (0.5) |

| VA | CATALOG NUMBER | VOLTAGE | | WIRING DIAGRAM | WEIGHT | PHASE | FREQ. |
|---|---|---|---|---|---|---|---|
| | | HIGH | LOW | | | | |
| 300 | **AE02-0300** | 208/240/480 | 115/24 | | 11 Lbs | 1ϕ | 50/60 Hz |

TYPICAL PERFORMANCE DATA

| | |
|---|---|
| Winding Rise: | 55°C |
| Insulation: | 105°C |
| Windings: | CU |

| | |
|---|---|
| Standards: | UL/cUL |

| | |
|---|---|
| Markings: | |

| | |
|---|---|
| Typical Efficiency: | |
| Full Load Losses | |
| No Load Losses | |

**Epoxy Encapsulated Control**

| A | B | C | D | E | F | | | | |
|---|---|---|---|---|---|---|---|---|---|
| 5.13 | 4.50 | 4.97 | 3.88 | 4.38 | .31 x .69 | | | | |

Revisions

Acme Electric®

Type No.

Date: August 3, 2010

| | | | | | | | | |
|---|---|---|---|---|---|---|---|---|
| | | | | | A | PRINTS TO | CONTROL 7 | |