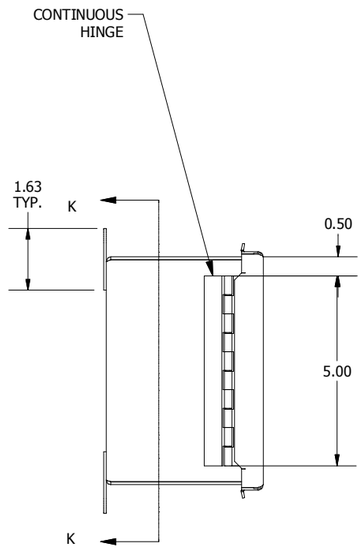

LEFT SIDE VIEW

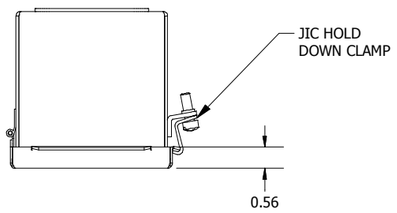

TOP VIEW

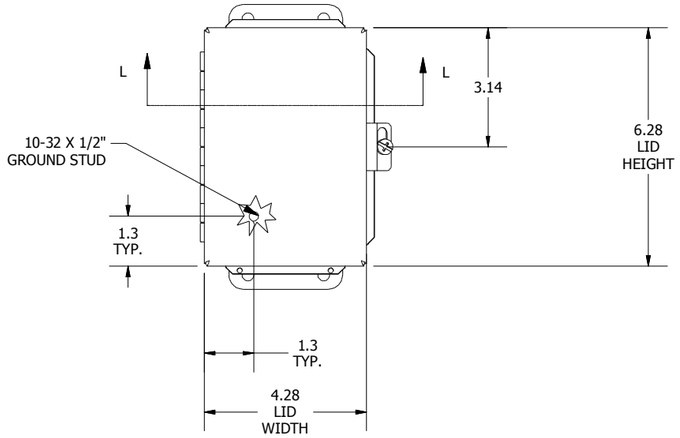

FRONT VIEW

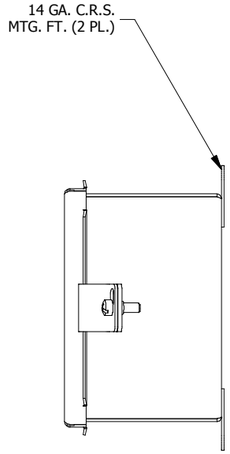

RIGHT SIDE VIEW

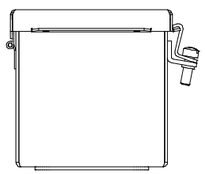

BOTTOM VIEW

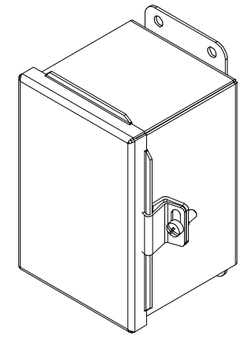

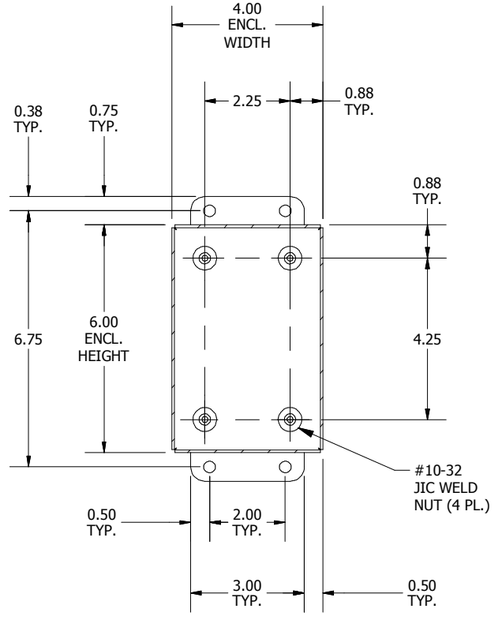

SECTION K-K
(INSIDE BACK OF ENCLOSURE)

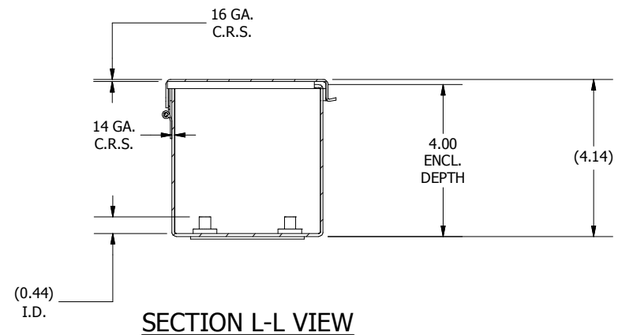

SECTION L-L VIEW
(INSIDE TOP OF ENCL.)

PART#: B060404CH
(DATA SUBJECT TO CHANGE WITHOUT NOTICE)

THIS DRAWING IS PROPERTY OF HUBBELL INC. WIEGMANN
ALL INFORMATION IS PROPRIETARY AND NOT TO BE DUPLICATED