

LEFT SIDE VIEW

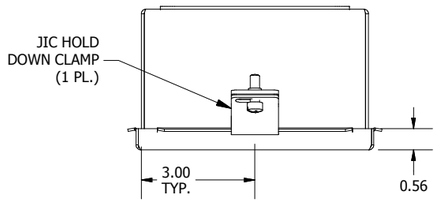

TOP VIEW

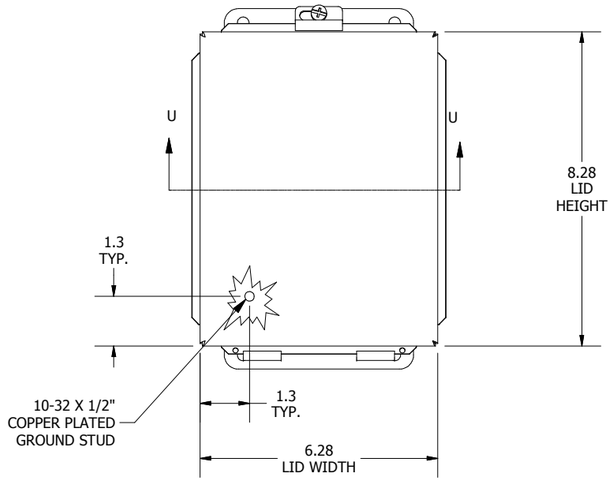

FRONT VIEW

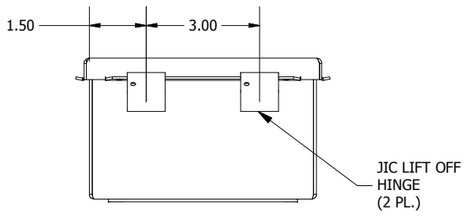

BOTTOM VIEW

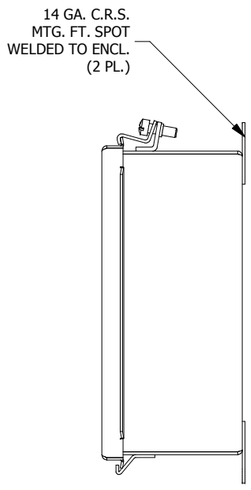

RIGHT SIDE VIEW

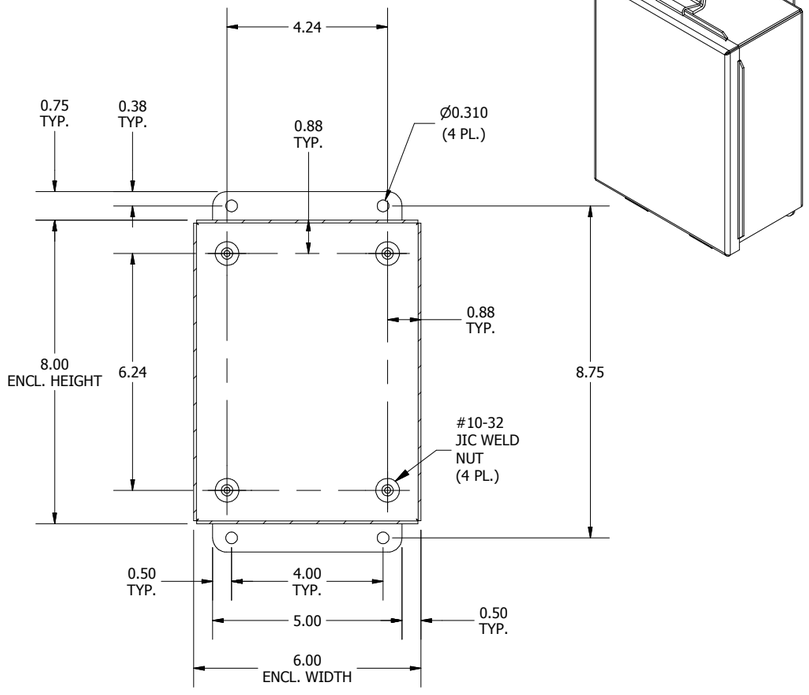

SECTION T-T
(INSIDE BACK OF ENCLOSURE)

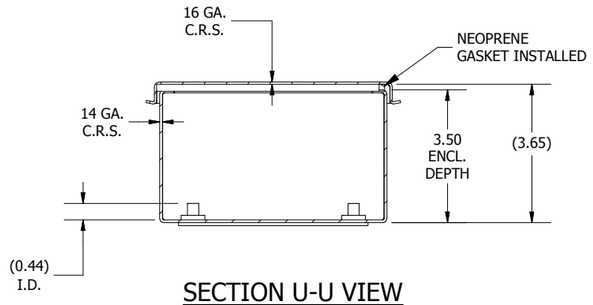

SECTION U-U VIEW
(INSIDE TOP OF ENCL.)

PART#: B080603
(DATA SUBJECT TO CHANGE WITHOUT NOTICE)

THIS DRAWING IS PROPERTY OF HUBBELL INC. WIEGMANN
ALL INFORMATION IS PROPRIETARY AND NOT TO BE DUPLICATED