

TOP VIEW

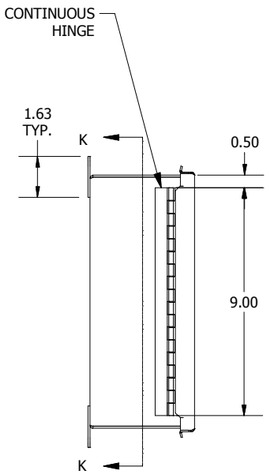

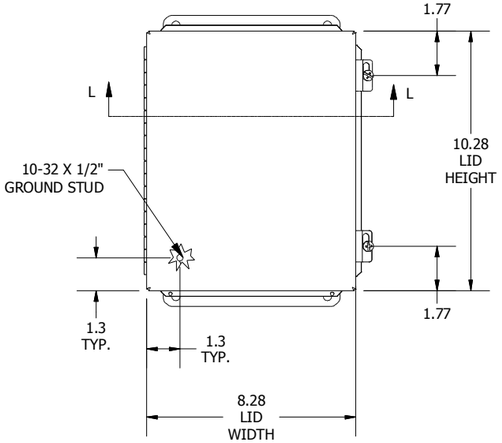

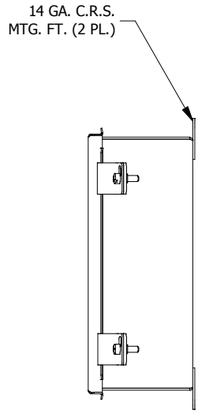

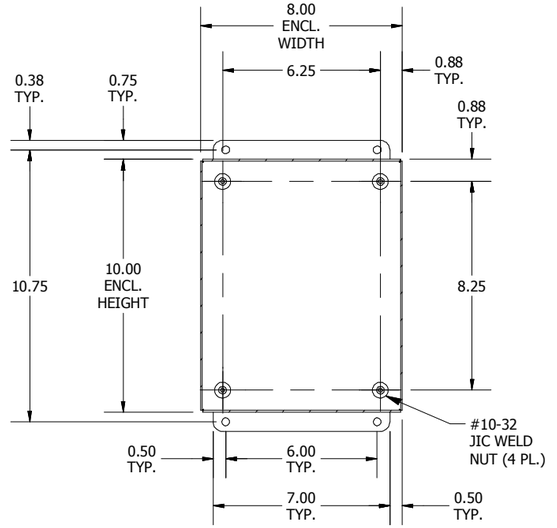

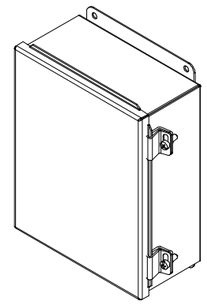

LEFT SIDE VIEW

FRONT VIEW

RIGHT SIDE VIEW

SECTION K-K
(INSIDE BACK OF ENCLOSURE)

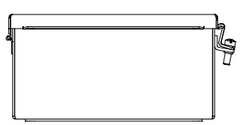

BOTTOM VIEW

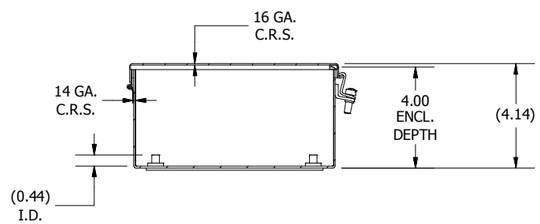

SECTION L-L VIEW
(INSIDE TOP OF ENCL.)

PART#: B100804CH
(DATA SUBJECT TO CHANGE WITHOUT NOTICE)

THIS DRAWING IS PROPERTY OF HUBBELL INC. WIEGMANN
ALL INFORMATION IS PROPRIETARY AND NOT TO BE DUPLICATED