

SECTION A-A
INSIDE BOTTOM OF ENCLOSURE

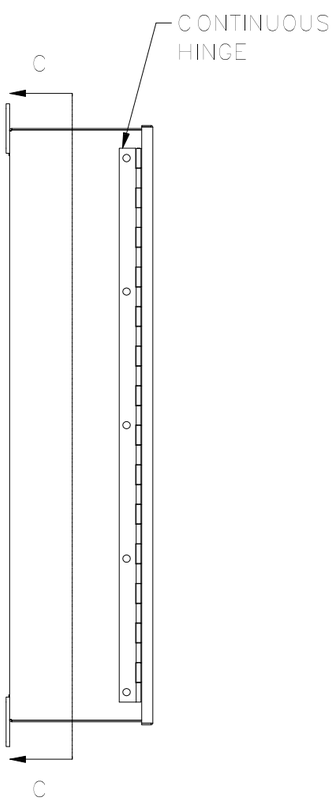

LEFT VIEW

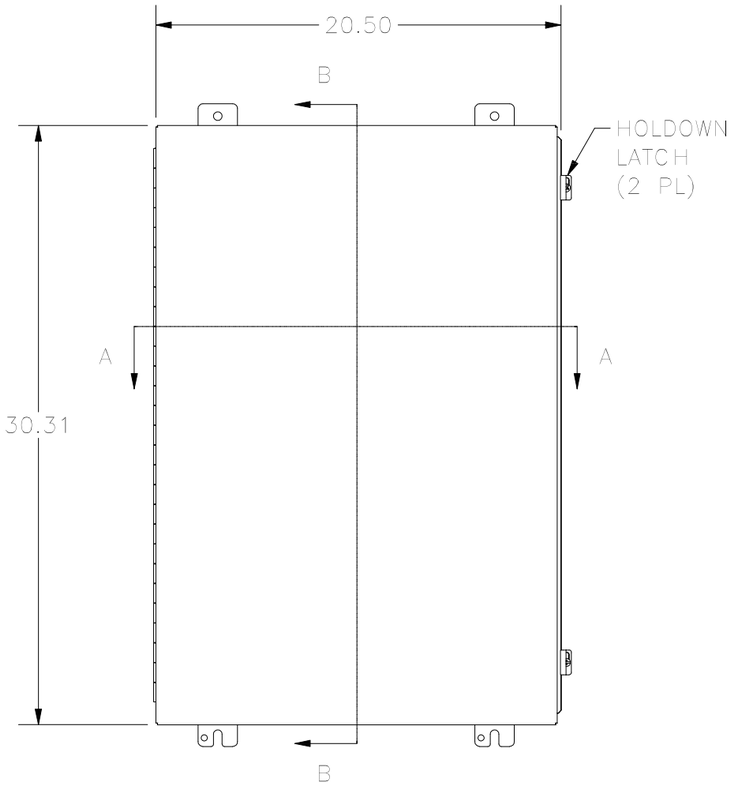

FRONT VIEW

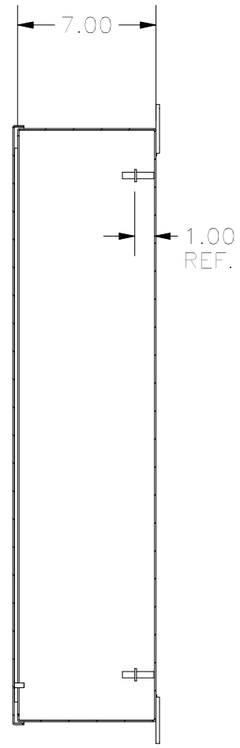

SECTION B-B
SIDE VIEW

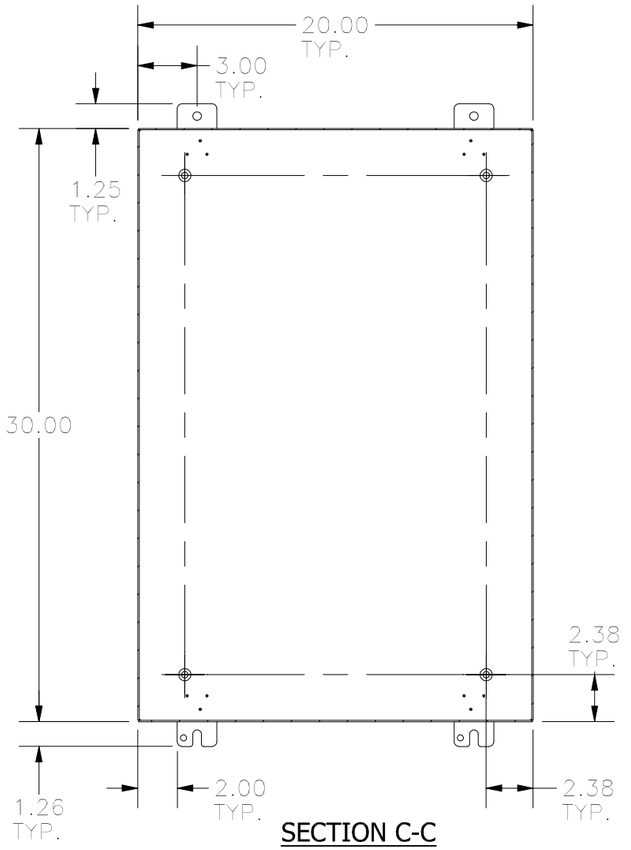

SECTION C-C
BACK VIEW

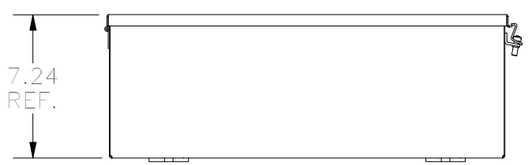

BOTOM VIEW

PART#: B302007CH
(DATA SUBJECT TO CHANGE WITHOUT NOTICE)

THIS DRAWING IS PROPERTY OF HUBBELL INC. WIEGMANN
ALL INFORMATION IS PROPRIETARY AND NOT TO BE DUPLICATED