BALDOR • RELIANCE

Product Information Packet

CDP3430-V12

.5HP,1800RPM,DC,56C,3420P,TENV,12V

Copyright © All product information within this document is subject to ABB Motors and Mechanical Inc. copyright © protection, unless otherwise noted.

Part Detail

Revision:	F	**Status:**	PRD/A	**Change #:**		**Proprietary:**	No
Type:	DC	**Prod. Type:**	3420P	**Elec. Spec:**	34WGZ609	**CD Diagram:**	CD0194
Enclosure:	TENV	**Mfg Plant:**		**Mech. Spec:**	34-7080	**Layout:**	34LY7080
Frame:	56C	**Mounting:**	F3	**Poles:**	00	**Created Date:**	
Base:	RG	**Rotation:**	R	**Insulation:**	F	**Eff. Date:**	06-26-2018
Field Type:		**Literature:**		**Elec. Diagram:**		**Replaced By:**	

Specs

Enclosure:	TENV		
Frame:	56C		
Frame Material:	Steel		
XP Class and Group:	None		
Agency Approvals:	CSA		
	UR		
Base Indicator:	Rigid		
Bearing Grease Type:	Polyrex EM (-20F +300F)		
Drip Cover:	No Drip Cover		
Duty Rating:	CONT		
Feedback Device:	NO FEEDBACK		
Heater Indicator:	No Heater		
Insulation Class:	F		
Lifting Lugs:	No Lifting Lugs		
Motor Lead Quantity/Wire Size:	2 @ 10 AWG		
Motor Lead Exit:	SPECIAL (OLD)		

Motor Lead Termination:	Ring Terminals		
Mounting Arrangement:	F3		
Product Family:	General Purpose		
Pulley End Bearing Type:	Sealed Bearing		
Shaft Extension Location:	Pulley End		
Shaft Ground Indicator:	No Shaft Grounding		
Shaft Rotation:	Reversible		
Shaft Slinger Indicator:	No Slinger		
Motor Standards:	NEMA		
XP Division:	Not Applicable		

Nameplate NP0111L

CAT.NO.	CDP3430-V12				
SPEC.	34-7080Z609G1				
HP	.5	**ENCL**	TENV		
RPM	1800				
FRAME	56C	**TYPE**	3420P		
ARM V	12	**ARM A**	40		
FLD V		**FLD A**			
INSUL	F	**AMB.**	40		
DUTY	CONT	**SUPPLY**	A		
BRG/DE	6203	**BRG/ODE**	6203		
BRUSHES	2/BP5104BV01				
		BLANK			
SER.					
BLANK					
APRV-CSA		**APRV-UL**			

Parts List

Part Number	Description	Quantity
SA117093	SA 34-7080Z609G1	1.000 EA
AA010467	AA 34-7080Z609G1	1.000 EA
BP5104BV01	CARBON BRUSH - 12 DC - MZ65	2.000 EA
BP5100	SPRING PRESSURE BRACKET ASSY	2.000 EA
34RK5006A01	ROCKERARM ASSEMBLY MODEL 34 PM	1.000 EA
51XF1032A08	10/32X1/2 HXWSHR HD, SL, TYPE F ,SERATED	4.000 EA
86XN0832B06	8-32X3/8 BIND HD MACH,BRA	2.000 EA
HW1001B08	WASHER, #8 SPLT LD, BR	2.000 EA
WD1349	TERMINAL BLOCK, 2 STUD .25-20 BOLT	1.000 EA
34GS1023	GASKET, STRAIN RELIEF PLATE - CS-301 LEX	1.000 EA
51XW0832A07	8-32 X .44, TAPTITE II, HEX WSHR SLTD SE	4.000 EA
XY2520B12	1/4-20 BRASS NUT	4.000 EA
HW1000B25	1/4 SAE FL WASHER NARROW ID=.281 OD=.625	6.000 EA
34EP3112A07	FR EP 34PM TENV 203 BRG	1.000 EA
HW5100A03	WAVY WASHER (W1543-017)	1.000 EA
34CB4519	BRUSH INSPECTION COVER	2.000 EA
34GS1022	GASKET, BRUSH COVER LID, NEOPRENE NON CO	2.000 EA
51XW0832A07	8-32 X .44, TAPTITE II, HEX WSHR SLTD SE	4.000 EA
34EP3300A66	PU ENDPLATE, MACH W/INTERNAL RABBET	1.000 EA
51XN1032A20	10-32 X 1 1/4 HX WS SL SR	2.000 EA
HW2501D13	KEY, 3/16 SQ X 1.375	1.000 EA
HA7000A04	KEY RETAINER 0.625 DIA SHAFTS	1.000 EA
LD5000B14	LEAD ASSY, ML1400B08 W/#10 & .25 RING TE	1.000 EA
LB9000A51	LEAD MARKER - WM-A1	4.000 SH

Parts List (continued)

Part Number	Description	Quantity
LB9000A52	LEAD MARKER - WM-"A2"	4.000 SH
LD5000B14	LEAD ASSY, ML1400B08 W/#10 & .25 RING TE	1.000 EA
MG1000G27	MED CHARCOAL METALLIC GREY 400-0096	0.014 GA
85XU0407S04	4X1/4 U DRIVE PIN STAINLESS	2.000 EA
HA3100A11	THRUBOLT 10-32 X 6.750	4.000 EA
LB1119N	WARNING LABEL	1.000 EA
LC0194	CONNECTION LABEL	1.000 EA
MN416A01	TAG-INSTAL-MAINT no wire (1200/bx) 5/18	1.000 EA
NP0111L	NP STD LASER ENGRAVED DC MOTORS, UL CSA	1.000 EA
35PA1000	PKG GRP, PRINT PK1008A06	1.000 EA

DC Motor Performance Data

Record # 501 - Typical performance - not guaranteed values

Winding: 34WGZ609-R002	**Type:** 3420P	**Enclosure:** TENV

Nameplate Data			General Characteristics	
Rated Output (HP)	0.5		Armature Resistance @ 25ºC	0.0213 Ω
R.P.M.	1800			
Armature Volts	12		Voltage Constant	5.84 v/krpm
Armature Amps	40			
Field Volts			Armature Inductance	0.1689 mH
Field Amps			Armature Inertia	6.887 LI²
Rating - Duty	40C AMB-CONT			
Power Supply Code	A			

Load Characteristics at 12 Armature Volts

Load Point	1	2	3	4	5	6	7
Armature Amps	4.44	12.86	21.28	29.7	38.12	46.54	54.97
R.P.M.	2054	1990	1926	1863	1799	1736	1672
Torque (LB-FT)	0	0.375	0.75	1.125	1.5	1.875	2.25

Performance Graph at 12.0 Arm V, 0.5HP Typical performance - Not guaranteed values

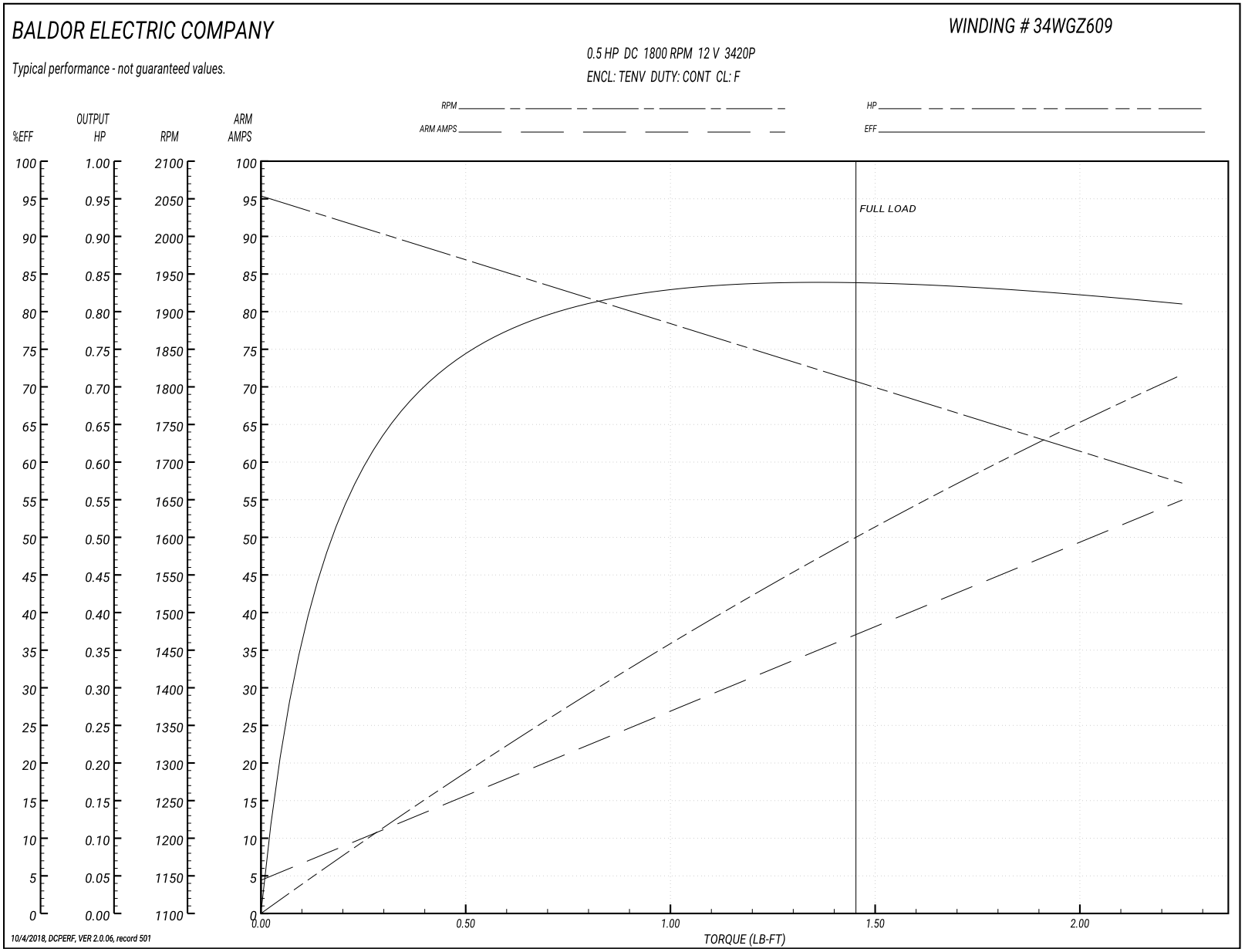

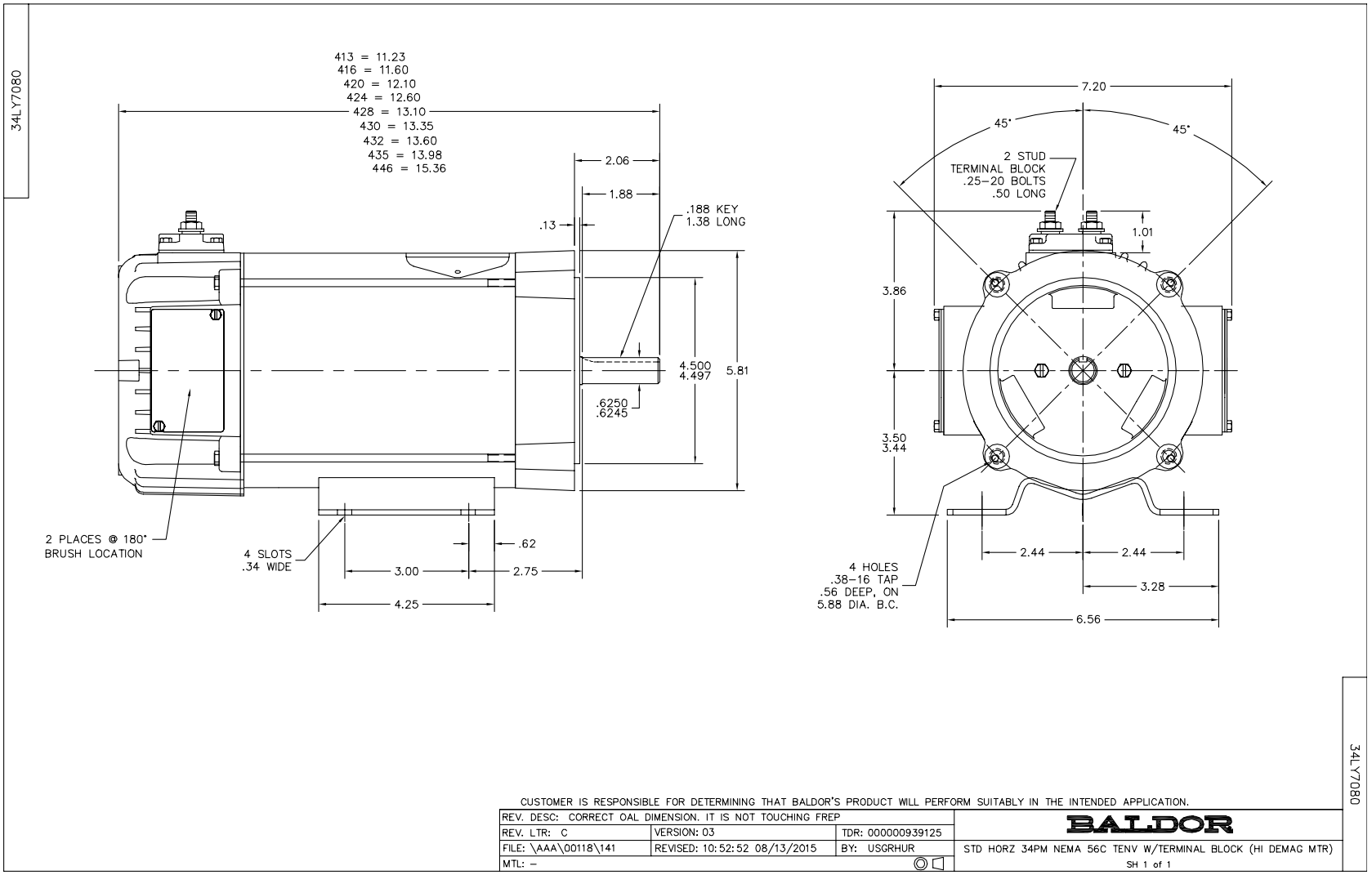
34LY7080
413 = 11.23
416 = 11.60
420 = 12.10
424 = 12.60
428 = 13.10
430 = 13.35
432 = 13.60
435 = 13.98
446 = 15.36
2.06
1.88
.13
.188 KEY
1.38 LONG
4.500
4.497
5.81
.6250
.6245
2 PLACES @ 180°
BRUSH LOCATION
4 SLOTS
.34 WIDE
.62
3.00
2.75
4.25
7.20
45°
45°
2 STUD
TERMINAL BLOCK
.25–20 BOLTS
.50 LONG
1.01
3.86
3.50
3.44
2.44
2.44
3.28
6.56
4 HOLES
.38–16 TAP
.56 DEEP, ON
5.88 DIA. B.C.
34LY7080
CUSTOMER IS RESPONSIBLE FOR DETERMINING THAT BALDOR'S PRODUCT WILL PERFORM SUITABLY IN THE INTENDED APPLICATION.
REV. DESC: CORRECT OAL DIMENSION. IT IS NOT TOUCHING FREP
REV. LTR: C
VERSION: 03
TDR: 000000939125
FILE: \AAA\00118\141
REVISED: 10:52:52 08/13/2015
BY: USGRHUR
MTL: –
BALDOR
STD HORZ 34PM NEMA 56C TENV W/TERMINAL BLOCK (HI DEMAG MTR)
SH 1 of 1

CD0194

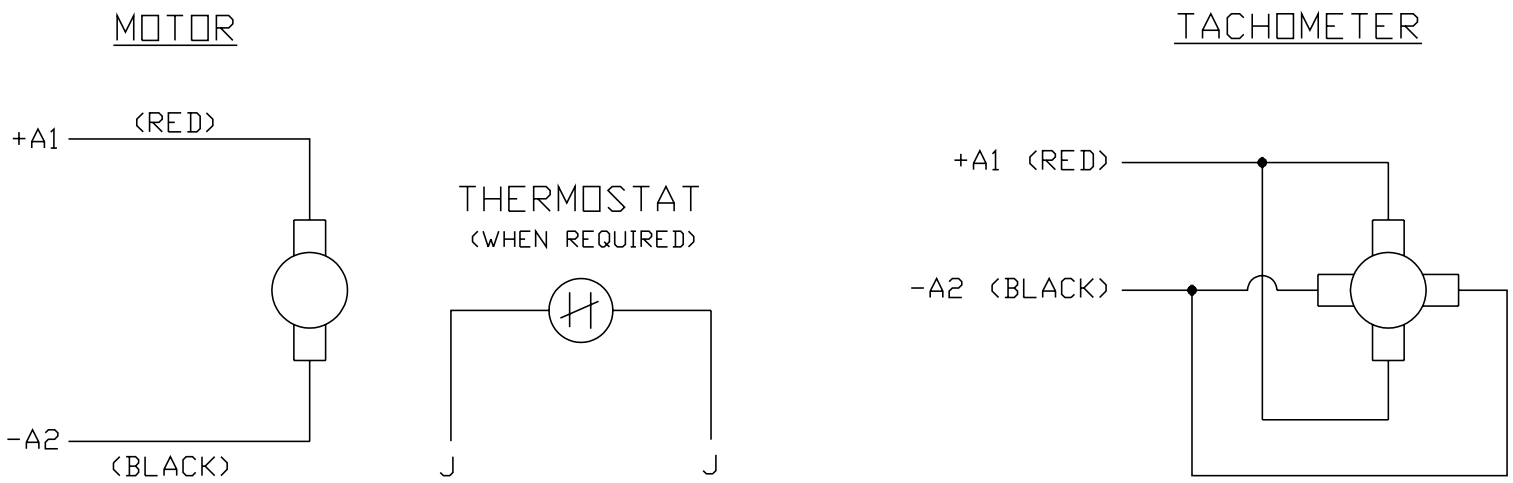

NOTES:

1. CCW ROTATION AS SHOWN FACING COMMUTATOR END. TO REVERSE MOTOR ROTATION OR TACHOMETER OUTPUT POLARITY INTERCHANGE LEADS A1(RED) & A2(BLACK)

2. LEAD COLORS FOR REFERENCE ONLY & NOT SPECIFIED BY THIS DRAWING. LEAD COLORS SPECIFIED BY LAYOUT DRAWING & BILL OF MATERIAL ONLY.

CD0194

MATL: –				BALDOR ELECTRIC Co.
REV: E	ADDED NOTE "LEAD COLORS FOR REFERENCE ONLY &....			
CD0194	SCALE: –	BY: CK	REVISED: 07/28/95	CD TYPE P DC PERMANENT MAGNET MOTORS AND TACHOMETERS
	FILE: AAA00004503		TDR: 0078737	