BALDOR • RELIANCE

Product Information Packet

CDP3440-V24

.75HP,1800RPM,DC,56C,3424P,TEFC,F1

Copyright © All product information within this document is subject to ABB Motors and Mechanical Inc. copyright © protection, unless otherwise noted.

Part Detail

Revision:	H	**Status:**	PRD/A	**Change #:**		**Proprietary:**	No
Type:	DC	**Prod. Type:**	3424P	**Elec. Spec:**	34WGZ611	**CD Diagram:**	CD0194
Enclosure:	TEFC	**Mfg Plant:**		**Mech. Spec:**	34-6893	**Layout:**	34LY6893
Frame:	56C	**Mounting:**	F1	**Poles:**	00	**Created Date:**	
Base:	RG	**Rotation:**	R	**Insulation:**	H	**Eff. Date:**	06-16-2018
Field Type:		**Literature:**		**Elec. Diagram:**		**Replaced By:**	

Specs

Enclosure:	TEFC		
Frame:	56CZ		
Frame Material:	Steel		
XP Class and Group:	None		
Agency Approvals:	CSA		
	UR		
Base Indicator:	Rigid		
Bearing Grease Type:	Polyrex EM (-20F +300F)		
Drip Cover:	No Drip Cover		
Duty Rating:	CONT		
Feedback Device:	NO FEEDBACK		
Heater Indicator:	No Heater		
Insulation Class:	H		
Lifting Lugs:	No Lifting Lugs		
Motor Lead Quantity/Wire Size:	2 @ 12 AWG		
Motor Lead Exit:	Ko Box		

Motor Lead Termination:	Flying Leads		
Mounting Arrangement:	F1		
Product Family:	General Purpose		
Pulley End Bearing Type:	Ball		
Shaft Extension Location:	Pulley End		
Shaft Ground Indicator:	No Shaft Grounding		
Shaft Rotation:	Reversible		
Shaft Slinger Indicator:	No Slinger		
Motor Standards:	NEMA		
XP Division:	Not Applicable		

Nameplate NP0111L

CAT.NO.	CDP3440-V24				
SPEC.	34-6893Z611				
HP	.75	**ENCL**	TEFC		
RPM	1800				
FRAME	56CZ	**TYPE**	3424P		
ARM V	24	**ARM A**	29.4		
FLD V		**FLD A**			
INSUL	H	**AMB.**	40		
DUTY	CONT	**SUPPLY**	A		
BRG/DE	6203	**BRG/ODE**	6203		
BRUSHES	2/BP5104BV01				
		BLANK			
SER.					
BLANK	---				
APRV-CSA		**APRV-UL**			

Parts List

Part Number	Description	Quantity
SA114012	SA 34-6893Z611	1.000 EA
AA010207	AA 34-6893Z611	1.000 EA
BP5104BV01	CARBON BRUSH - 12 DC - MZ65	2.000 EA
BP5100	SPRING PRESSURE BRACKET ASSY	2.000 EA
51XF1032A08	10/32X1/2 HXWSHR HD, SL, TYPE F ,SERATED	4.000 EA
11XW1032G06	10-32 X .38, TAPTITE II, HEX WSHR SLTD U	1.000 EA
HW3001B01	BRASS CUP WASHER, FOR #10 SCREW	1.000 EA
34EP3114A01	FR EP, MACH MODEL 34 TEFC W/EXT T-BOLTS	1.000 EA
HW5100A03	WAVY WASHER (W1543-017)	1.000 EA
34CB4519	BRUSH INSPECTION COVER	2.000 EA
34GS1022	GASKET, BRUSH COVER LID, NEOPRENE NON CO	2.000 EA
51XW0832A07	8-32 X .44, TAPTITE II, HEX WSHR SLTD SE	4.000 EA
34EP3300A66	PU ENDPLATE, MACH W/INTERNAL RABBET	1.000 EA
51XN1032A20	10-32 X 1 1/4 HX WS SL SR	2.000 EA
34FN3002A01SP	EXTERNAL FAN, PLASTIC, .637/.639 HUB W/	1.000 EA
34FH5002A09	FAN COVER ASSY W/SHAFT COVER, ROTATED DI	1.000 EA
51XW1032A06	10-32 X .38, TAPTITE II, HEX WSHR SLTD S	3.000 EA
34CB4518	CONDUIT BOX LID, STAMPED F/34P	1.000 EA
34GS1027	GASKET, 34P KOBX LID, CS-301 LEXIDE	1.000 EA
51XW0832A07	8-32 X .44, TAPTITE II, HEX WSHR SLTD SE	4.000 EA
HW2501D13	KEY, 3/16 SQ X 1.375	1.000 EA
HA7000A04	KEY RETAINER 0.625 DIA SHAFTS	1.000 EA
34RK5006	ROCKERARM ASSEMBLY MODEL 34 PM	1.000 EA
WD4102A65	HEYCO #2827 (B 625-500) SHORTY BUSHING	1.000 EA

Parts List (continued)

Part Number	Description	Quantity
MG1000G27	MED CHARCOAL METALLIC GREY 400-0096	0.014 GA
85XU0407S04	4X1/4 U DRIVE PIN STAINLESS	2.000 EA
WD1000A50	TERM, AMP #4-520447-2	2.000 EA
HA3100A48	THRUBOLT 10-32 X 7.188	4.000 EA
MN416A01	TAG-INSTAL-MAINT no wire (1200/bx) 5/18	1.000 EA
LB1119N	WARNING LABEL	1.000 EA
LC0194	CONNECTION LABEL	1.000 EA
NP0111L	NP STD LASER ENGRAVED DC MOTORS, UL CSA	1.000 EA
27PA1001	PKG GRP, PRINT PK1027A06	1.000 EA

DC Motor Performance Data

Record # 499 - Typical performance - not guaranteed values

Winding: 34WGZ611-R001	**Type:** 3424P	**Enclosure:** TEFC

Nameplate Data			General Characteristics	
Rated Output (HP)	0.75		Armature Resistance @ 25ºC	0.0933 Ω
R.P.M.	1800			
Armature Volts	24		Voltage Constant	12.46 v/krpm
Armature Amps	29.4			
Field Volts			Armature Inductance	0.7493 mH
Field Amps			Armature Inertia	8.2643 LI²
Rating - Duty	40C AMB-CONT			
Power Supply Code	A			
			Temp. Rise @ Rated Load	103°C

Load Characteristics at 24 Armature Volts

Load Point	1	2	3	4	5	6	7
Armature Amps	2.28	8.05	14.05	19.8	25.8	31.68	37
R.P.M.	1900	1843	1772	1709	1635	1574	1493
Torque (LB-FT)	0	0.55	1.1	1.65	2.2	2.75	3.3

Performance Graph at 24.0 Arm V, 0.75HP Typical performance - Not guaranteed values

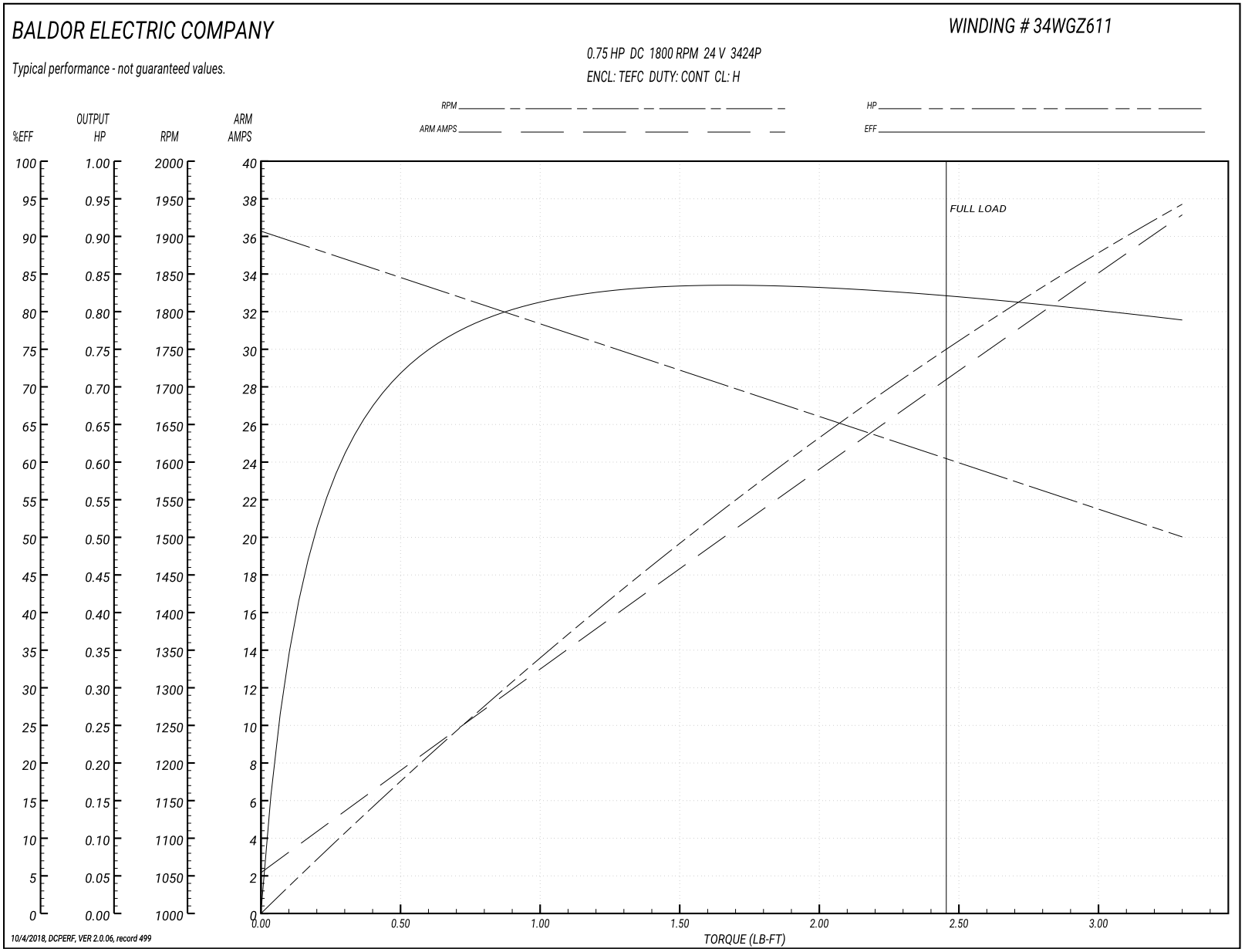

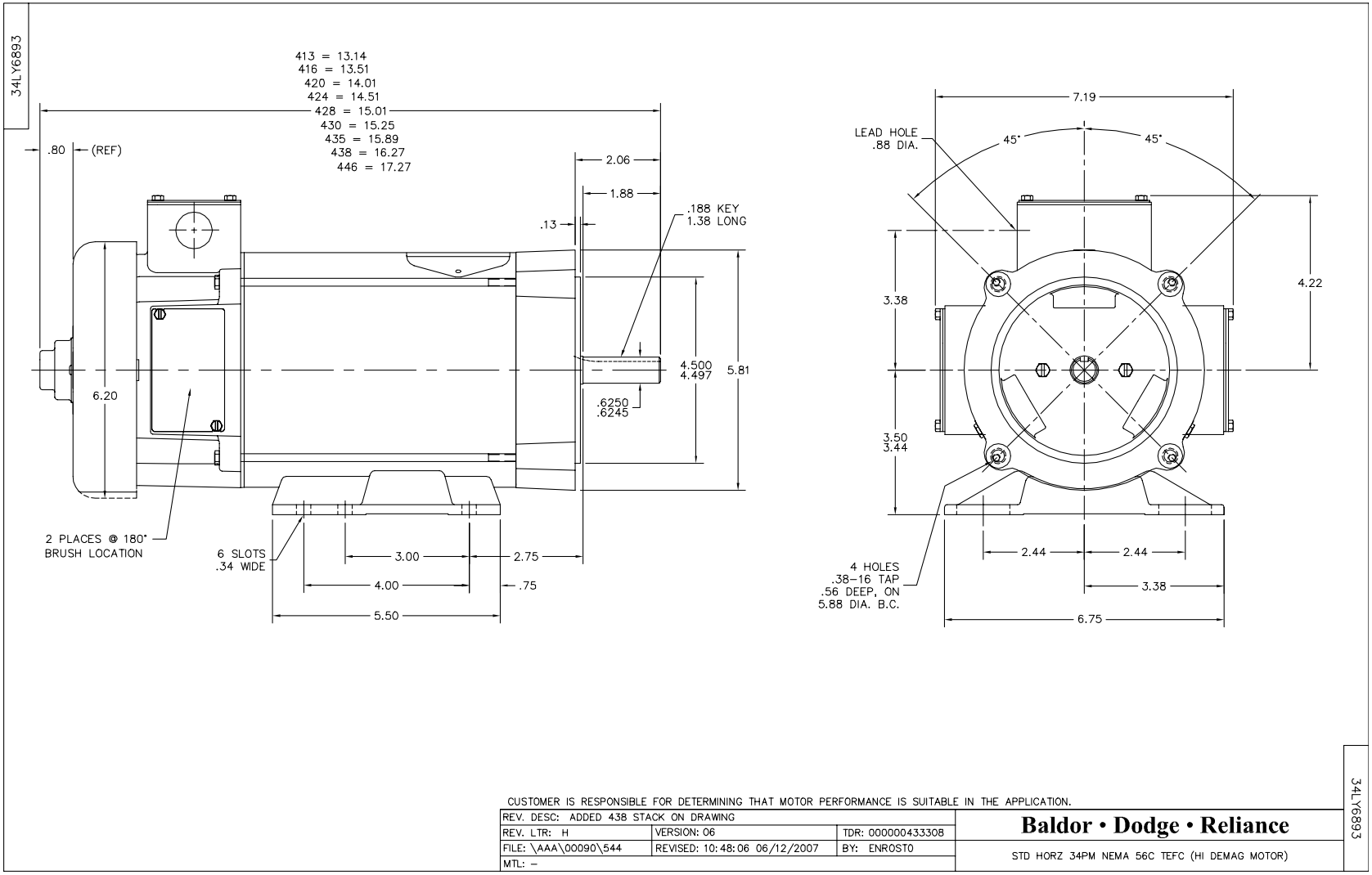

CUSTOMER IS RESPONSIBLE FOR DETERMINING THAT MOTOR PERFORMANCE IS SUITABLE IN THE APPLICATION.

REV. DESC: ADDED 438 STACK ON DRAWING		
REV. LTR: H	VERSION: 06	TDR: 000000433308
FILE: \AAA\00090\544	REVISED: 10:48:06 06/12/2007	BY: ENROST0
MTL: –		

Baldor • Dodge • Reliance

STD HORZ 34PM NEMA 56C TEFC (HI DEMAG MOTOR)

34LY6893

CD0194

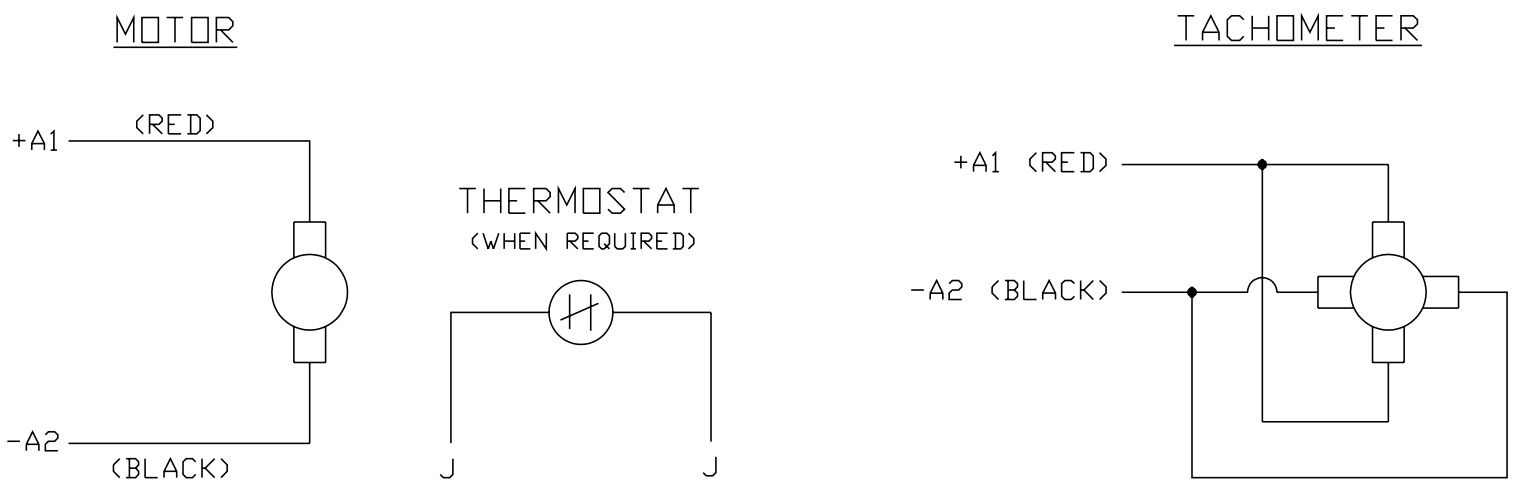

NOTES:

1. CCW ROTATION AS SHOWN FACING COMMUTATOR END. TO REVERSE MOTOR ROTATION OR TACHOMETER OUTPUT POLARITY INTERCHANGE LEADS A1(RED) & A2(BLACK)

2. LEAD COLORS FOR REFERENCE ONLY & NOT SPECIFIED BY THIS DRAWING. LEAD COLORS SPECIFIED BY LAYOUT DRAWING & BILL OF MATERIAL ONLY.

CD0194

MATL: –				BALDOR ELECTRIC Co.
REV: E	ADDED NOTE "LEAD COLORS FOR REFERENCE ONLY &....			
CD0194	SCALE: –	BY: CK	REVISED: 07/28/95	CD TYPE P DC PERMANENT MAGNET MOTORS AND TACHOMETERS
	FILE: AAA00004503		TDR: 0078737	