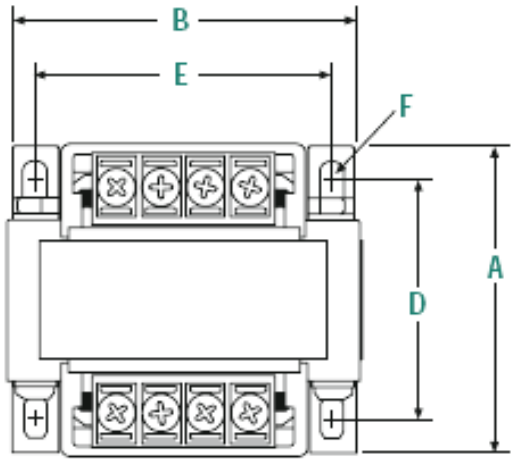

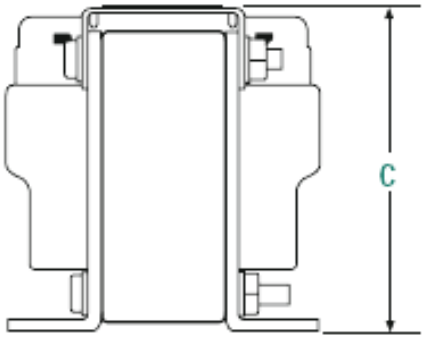

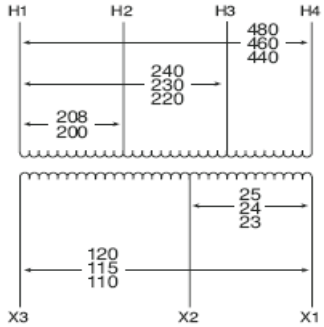

FUSE KITS & ACCESSORIES

CATALOG NUMBER	VA	DESCRIPTION	APPROX. SHIPPING WT. (Lbs./Kg.)
PL-79920	50-750	Fuse Kit: Primary Fuse Block EIC Series (2 Class CC Blocks)	1.0 (0.5)
PL-79921	150-750	Fuse Kit: Primary & Secondary Fuse Block EIC Series (2 Class CC and 1 Midget Blocks)	1.0 (0.5)
PL-79922	50-750	Fuse Kit: Primary Fuse Block EIC Series CE Listed w/ Covers (2 Class CC Blocks)	1.0 (0.5)
PL-79923	150-750	Fuse Kit: Primary & Secondary Fuse Block EIC Series CE Listed w/ Covers (2 Class CC and 1 Midget Blocks)	1.0 (0.5)
PL-79924		Fuse Kit: Secondary Fuse 1/4" x 1-1/4" w/ARM	1.0 (0.5)
PL-79925	50 – 350	Cover: Small Terminal Covers (Qty. 2)	1.0 (0.5)
PL-79926	500 & 750	Cover: Large Terminal Covers (Qty. 2)	1.0 (0.5)
PL-79927		Cover: Fuse Block Covers (Qty. 1)	1.0 (0.5)
PL-79928	50 – 350	Link: Small Jumper Links (Qty. 2)	1.0 (0.5)
PL-79929	500 & 750	Link: Large Jumper Links (Qty. 2)	1.0 (0.5)
PL-79930	50 – 350	Fuse Kit: Secondary Fuse Midget w/ARM	1.0 (0.5)
PL-79931	500 & 750	Fuse Kit: Secondary Fuse Midget w/ARM	1.0 (0.5)

VA	CATALOG NUMBER	VOLTAGE		WIRING DIAGRAM	WEIGHT	PHASE	FREQ.
		HIGH	LOW				
500	**CE02-0500**	208/240/480	115/24		19.6 Lbs	1ϕ	50/60 Hz

TYPICAL PERFORMANCE DATA

Winding Rise:	55°C
Insulation:	105°C
Windings:	CU

Standards:	UL/cUL

Markings:	CE

Typical Efficiency:	
Full Load Losses	
No Load Losses	

Epoxy Encapsulated Control

A	B	C	D	E	F				
7.25	5.25	4.69	6.00	4.38	.31 x .69				

					A	PRINTS TO	CONTROL 7	

Revisions

Acme Electric®

Type No.

Date: August 3, 2010