BALDOR • RELIANCE

Product Information Packet

CEM2547T

60HP,1775RPM,3PH,60HZ,364TC,4278M,OPSB,F

Copyright © All product information within this document is subject to ABB Motors and Mechanical Inc. copyright © protection, unless otherwise noted.

Part Detail

Revision:	S	**Status:**	PRD/A	**Change #:**		**Proprietary:**	No
Type:	AC	**Elec. Spec:**	42WGW587	**CD Diagram:**	CD0180	**Mfg Plant:**	
Mech. Spec:	42F95	**Layout:**	42LYF095	**Poles:**	04	**Created Date:**	07-29-2010
Base:	RG	**Eff. Date:**	08-21-2018	**Leads:**	9#6		

Specs

Catalog Number:	CEM2547T	**Insulation Class:**	F
Enclosure:	OPSB	**Inverter Code:**	Inverter Ready
Frame:	364TC	**KVA Code:**	G
Frame Material:	Steel	**Lifting Lugs:**	Standard Lifting Lugs
Output @ Frequency:	60.000 HP @ 60 HZ	**Locked Bearing Indicator:**	Locked Bearing
Synchronous Speed @ Frequency:	1800 RPM @ 60 HZ	**Motor Lead Quantity/Wire Size:**	9 @ 6 AWG
Voltage @ Frequency:	460.0 V @ 60 HZ	**Motor Lead Exit:**	Ko Box
	230.0 V @ 60 HZ	**Motor Lead Termination:**	Flying Leads
Agency Approvals:	CSA	**Motor Type:**	4278M
	CSA EEV	**Mounting Arrangement:**	F1
	UR	**Power Factor:**	87
Auxillary Box:	No Auxillary Box	**Product Family:**	General Purpose
Auxillary Box Lead Termination:	None	**Pulley End Bearing Type:**	Ball
Base Indicator:	Rigid	**Pulley Face Code:**	C-Face
Bearing Grease Type:	Polyrex EM (-20F +300F)	**Pulley Shaft Indicator:**	Standard
Blower:	None	**Rodent Screen:**	None
Current @ Voltage:	68.000 A @ 460.0 V	**Shaft Extension Location:**	Pulley End
	144.000 A @ 208.0 V	**Shaft Ground Indicator:**	No Shaft Grounding

	136.000 A @ 230.0 V
Design Code:	A
Drip Cover:	No Drip Cover
Duty Rating:	CONT
Electrically Isolated Bearing:	Not Electrically Isolated
Feedback Device:	NO FEEDBACK
Front Face Code:	Standard
Front Shaft Indicator:	None
Heater Indicator:	No Heater

Shaft Rotation:	Reversible
Shaft Slinger Indicator:	No Slinger
Speed Code:	Single Speed
Motor Standards:	NEMA
Starting Method:	Direct on line
Thermal Device - Bearing:	NONE (OLD)
Thermal Device - Winding:	None
Vibration Sensor Indicator:	No Vibration Sensor
Winding Thermal 1:	None
Winding Thermal 2:	None

Nameplate NP2138LUA

CAT.NO.	CEM2547T			**P/N**				**ENCLOSURE**	OPSB
SPEC.	42F095W587G1	**CC**	010A	**FRAME**	364TC			**S/N**	
HP	60			**CLASS**	F	**HZ**	60		
RPM	1775	**PH**	3	**DES**	A				
VOLT	230/460			**KVA-CODE**	G	**ODE BRG**	6311	**DE BRG**	6313
AMP	136/68			**USABLE AT 208V**	144				
RATING	40C AMB-CONT			**GREASE**	POLYREX EM				
NEMA-NOM-EFF	95	**PF**	87	**SER.F.**	1.15				
	50Hz 60Hp 190/380V 162/81A				SF 1.0				
HTR-VOLTS		**HTR-AMPS**							

Parts List

Part Number	Description	Quantity
SA200665	SA 42F095W587G1	1.000 EA
RA187976	RA 42F095W587G1	1.000 EA
HA6360	LIFTING LUG FOR 42 FRAME MOTORS.	2.000 EA
HA6017	CAST ADAPTER, 40,42 KOBX	1.000 EA
19XW3118A12	.31-18 X .75 HEX WASHER HEAD TAPTITE II	2.000 EA
HW1001A31	LOCKWASHER 5/16, ZINC PLT.591 OD, .319 I	2.000 EA
WD1000B25	GND LUG, BURNDY L125HP OR T&B L125HP-BB	1.000 EA
19XW3118G08	.31-18X.50,HEX WSHR HD,TAPTITE 2,GREEN	1.000 EA
10CB3002	CONDUIT BOX CAST W/3.625 LEAD HOLE	1.000 EA
19XW3118A12	.31-18 X .75 HEX WASHER HEAD TAPTITE II	4.000 EA
HW1001A31	LOCKWASHER 5/16, ZINC PLT.591 OD, .319 I	4.000 EA
42EP3200A01	FR ENDPLATE, MACH	1.000 EA
HW5100A13	W4627-047 WVY WSHER	1.000 EA
42EP1400A01	PUEP MACH,	1.000 EA
10XN3816K56	3/8-16 X 3 1/2 HEX HEAD MACHINE SCREW,	4.000 EA
HW1001A38	LOCKWASHER 3/8, ZINC PLT .688 OD, .382 I	4.000 EA
XY5013A12	NUT,1/2-13,HEX,STEEL,ZINCPLATED	8.000 EA
10CB3500SP	CONDUIT BOX LID, CAST	1.000 EA
51XW2520A12	.25-20 X .75, TAPTITE II, HEX WSHR SLTD	4.000 EA
HW2501J36	KEY, 5/8 SQ X 4.250	1.000 EA
LB1115N	LABEL,LIFTING DEVICE (ON ROLLS)	1.000 EA
MN416A01	TAG-INSTAL-MAINT no wire (1200/bx) 5/18	1.000 EA
HW4500A03	GREASE FITTING, .125 NPT 1610(ALEMITE) 8	1.000 EA
HW4500A20	1/8NPT SL PIPE PLUG	1.000 EA

Parts List (continued)

Part Number	Description	Quantity
HA4051A00	PLASTIC CAP FOR GREASE FITTING	1.000 EA
MJ1000A02	GREASE, POLYREX EM EXXON (USe 4824-15A)	0.030 LB
HW4500A03	GREASE FITTING, .125 NPT 1610(ALEMITE) 8	1.000 EA
HW4500A20	1/8NPT SL PIPE PLUG	1.000 EA
HA4051A00	PLASTIC CAP FOR GREASE FITTING	1.000 EA
MG1000Y03	MUNSELL 2.53Y 6.70/ 4.60, GLOSS 20,	0.050 GA
85XU0407S04	4X1/4 U DRIVE PIN STAINLESS	4.000 EA
HA3151A12	THRUBOLT STUD 1/2-13 X 23.00	4.000 EA
42AD2001A01	BAFFLE PLATE 42 OPEN, SLOTTED BAND MTRS	1.000 EA
42AD2001A01	BAFFLE PLATE 42 OPEN, SLOTTED BAND MTRS	1.000 EA
LB1119N	WARNING LABEL	1.000 EA
LC0181	CONNECTION LABEL	1.000 EA
NP2138LUA	ALUM SUPER-E UL CSA-EEV PREM CC (300SER)	1.000 EA
42PA1000	PACKAGING GROUP PRINT PK1024A06	1.000 EA

AC Induction Motor Performance Data

Record # 13772 - Typical performance - not guaranteed values

Winding: 42WGW587-R001	**Type:** 4278M	**Enclosure:** OPSB

Nameplate Data				460 V, 60 Hz: High Voltage Connection	
Rated Output (HP)	60			Full Load Torque	177 LB-FT
Volts	230/460			Start Configuration	direct on line
Full Load Amps	136/68			Breakdown Torque	624 LB-FT
R.P.M.	1775			Pull-up Torque	245 LB-FT
Hz	60	Phase	3	Locked-rotor Torque	314 LB-FT
NEMA Design Code	A	KVA Code	G	Starting Current	470 A
Service Factor (S.F.)	1.15			No-load Current	22.2 A
NEMA Nom. Eff.	95	Power Factor	87	Line-line Res. @ 25ºC	0.0815 Ω
Rating - Duty	40C AMB-CONT			Temp. Rise @ Rated Load	30°C
S.F. Amps				Temp. Rise @ S.F. Load	40°C
				Locked-rotor Power Factor	26.2
				Rotor inertia	10.4 LB-FT2

Load Characteristics 460 V, 60 Hz, 60 HP

% of Rated Load	25	50	75	100	125	150	S.F.
Power Factor	56	77	85	87	89	89	88
Efficiency	92.6	94.9	95.3	95	94.6	93.7	94.8
Speed	1793	1787	1781	1775	1769	1762	1771
Line amperes	27.3	38.7	52.1	67.6	83.6	101.3	77.1

Performance Graph at 460V, 60Hz, 60.0HP Typical performance - Not guaranteed values

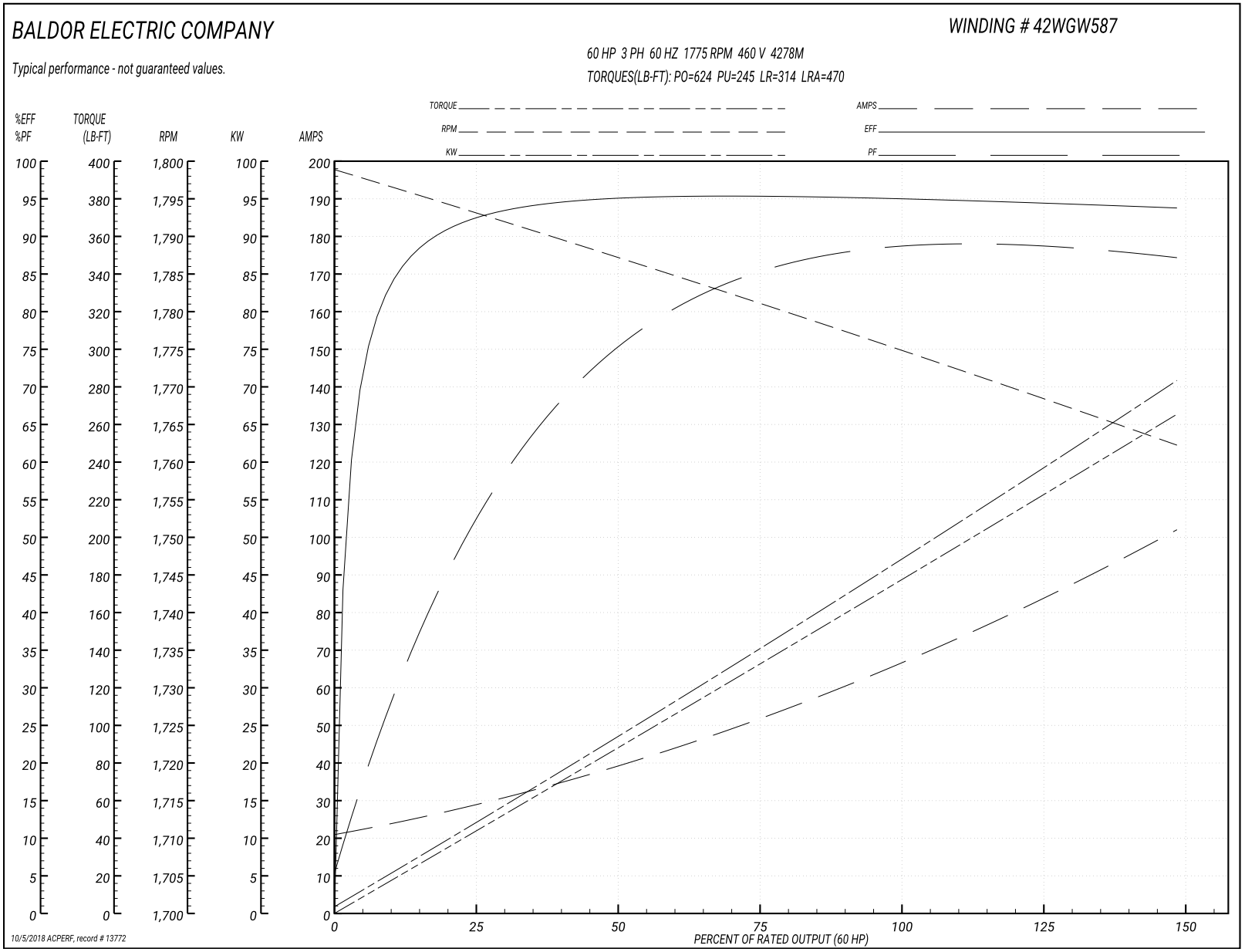

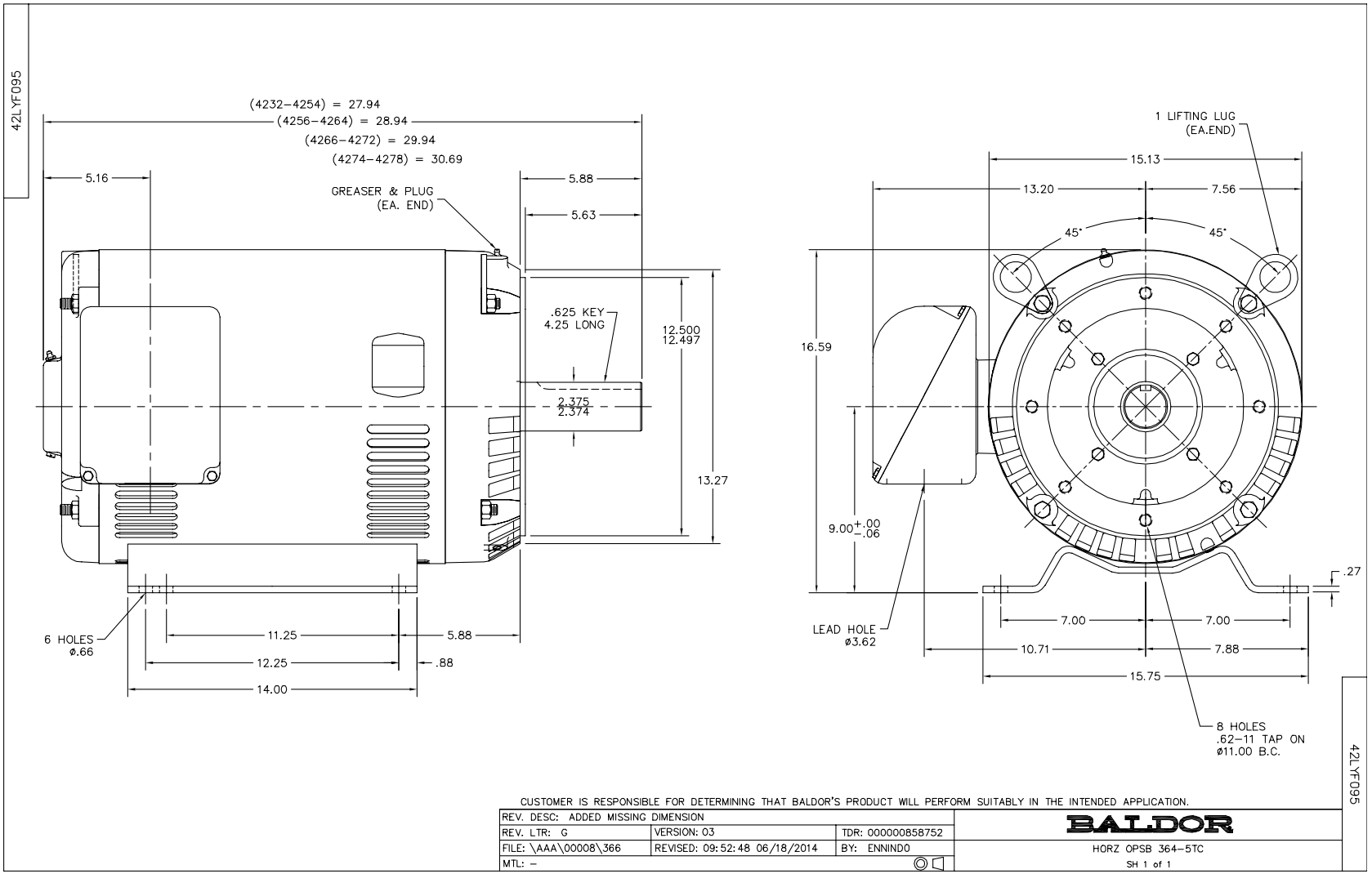
42LYF095
(4232–4254) = 27.94
(4256–4264) = 28.94
(4266–4272) = 29.94
(4274–4278) = 30.69
5.16
GREASER & PLUG
(EA. END)
5.88
5.63
.625 KEY
4.25 LONG
12.500
12.497
2.375
2.374
13.27
6 HOLES
ø.66
11.25
12.25
14.00
5.88
.88
1 LIFTING LUG
(EA.END)
15.13
13.20
7.56
45°
45°
16.59
9.00 +.00 −.06
LEAD HOLE
ø3.62
.27
7.00
7.00
10.71
7.88
15.75
8 HOLES
.62–11 TAP ON
ø11.00 B.C.
42LYF095
CUSTOMER IS RESPONSIBLE FOR DETERMINING THAT BALDOR'S PRODUCT WILL PERFORM SUITABLY IN THE INTENDED APPLICATION.
REV. DESC: ADDED MISSING DIMENSION
REV. LTR: G
VERSION: 03
TDR: 000000858752
FILE: \AAA\00008\366
REVISED: 09:52:48 06/18/2014
BY: ENNIND0
MTL: –
BALDOR
HORZ OPSB 364–5TC
SH 1 of 1

CD0180

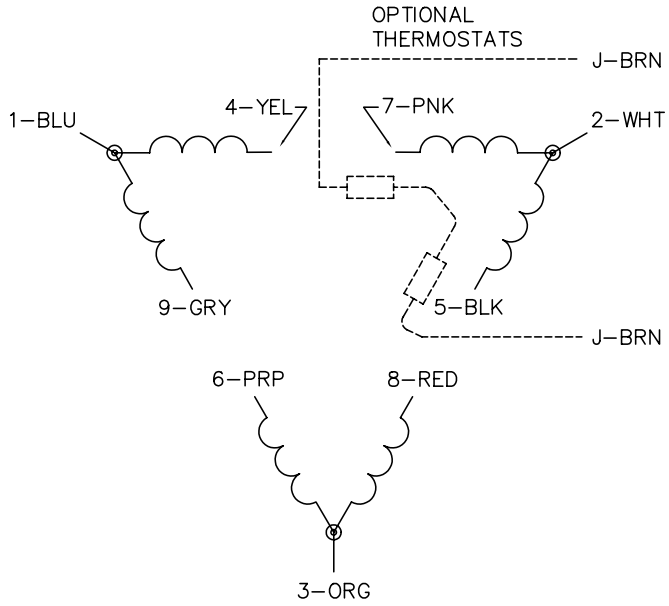

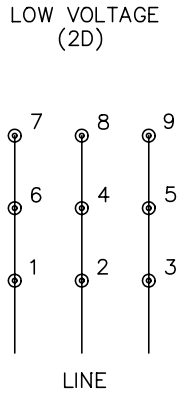

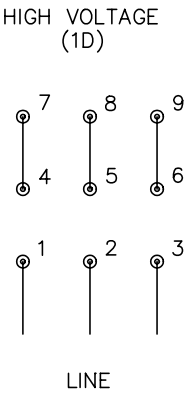

NOTES:

1. INTERCHANGE ANY TWO LINE LEADS TO REVERSE ROTATION.
2. OPTIONAL THERMOSTATS ARE PROVIDED WHEN SPECIFIED.
3. ACTUAL NUMBER OF INTERNAL PARALLEL CIRCUITS MAY BE A MULTIPLE OF THOSE SHOWN ABOVE.
4. LEAD COLORS ARE OPTIONAL. LEADS MUST ALWAYS BE NUMBERED AS SHOWN.

CD0180

REV. DESC: REVISE TO SHOW OPTIONAL COLORS			BALDOR ELECTRIC Co.
REV. LTR: C	BY: JLP	REVISED: 01/21/99 2:28	TDR: 0171435
CD0180		FILE: AAA00005148	MDL: –
		MTL: –	3PH, DV, 9 LEADS, DELTA CONNECTION

Marketing maintained PDF of MN416:

http://www.baldor.com/support/Literature/Load.ashx/MN416?ManNumber=MN416