

TOP VIEW

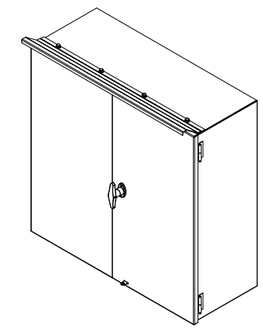

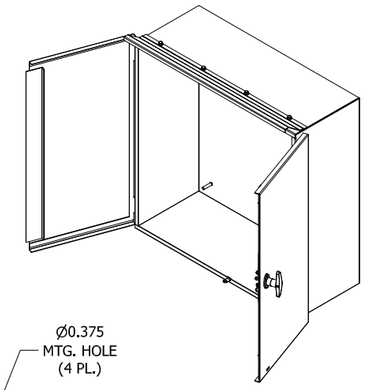

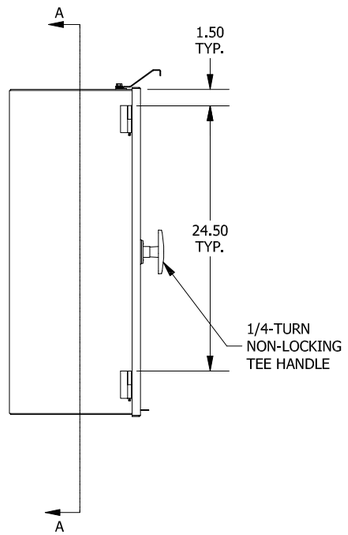

LEFT SIDE VIEW

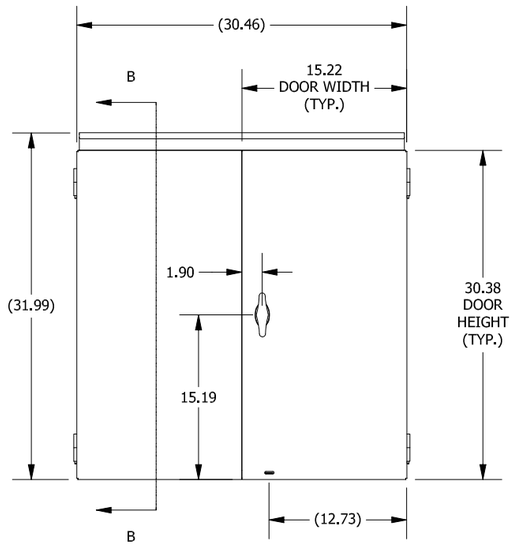

FRONT VIEW

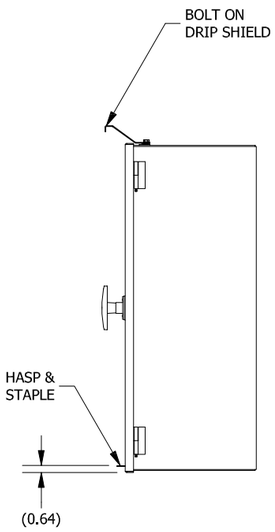

RIGHT SIDE VIEW

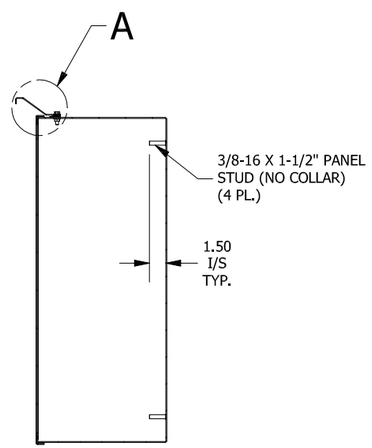

SECTION B-B
(INSIDE LEFT OF ENCL.)

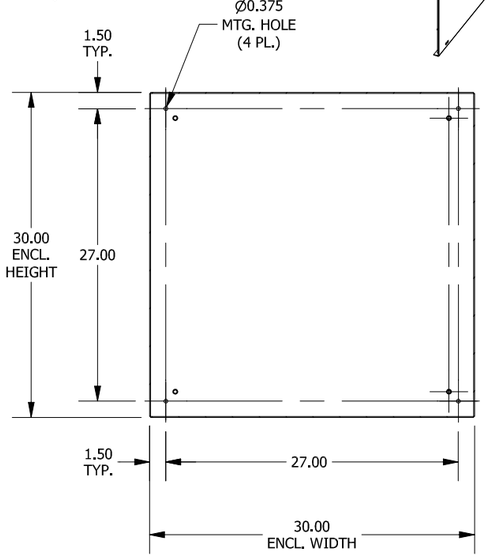

SECTION A-A
(INSIDE BACK OF ENCL.)

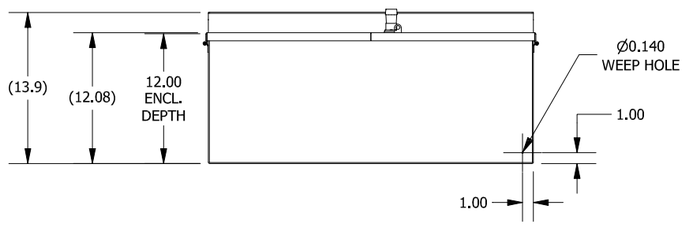

BOTTOM VIEW

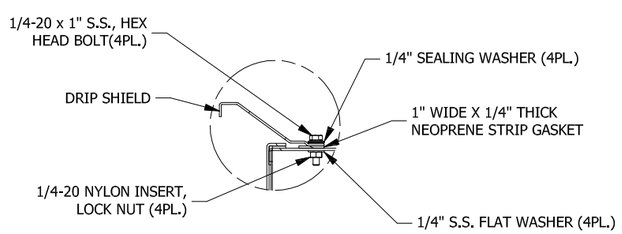

DETAIL A
(DRIP SHIELD INSTALL DETAIL)

PART#: CTDD303012
(DATA SUBJECT TO CHANGE WITHOUT NOTICE)

THIS DRAWING IS PROPERTY OF HUBBELL INC. WIEGMANN
ALL INFORMATION IS PROPRIETARY AND NOT TO BE DUPLICATED