

TOP VIEW

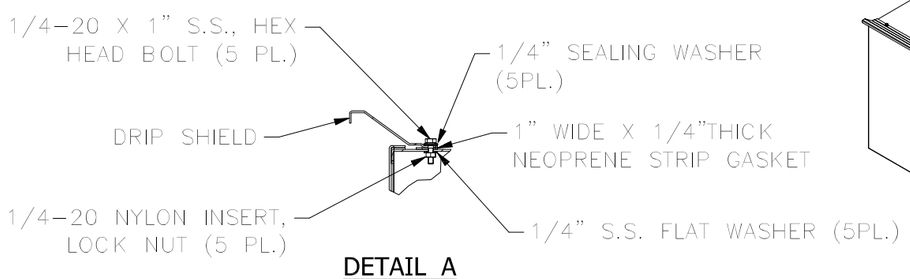

DETAIL A
(DRIP SHIELD INSTALL DETAIL)

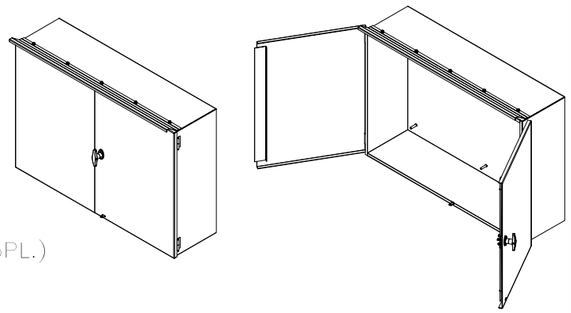

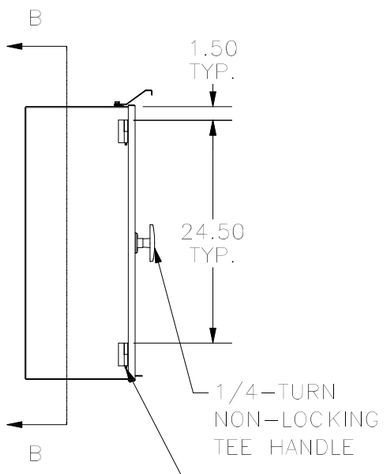

LEFT SIDE VIEW

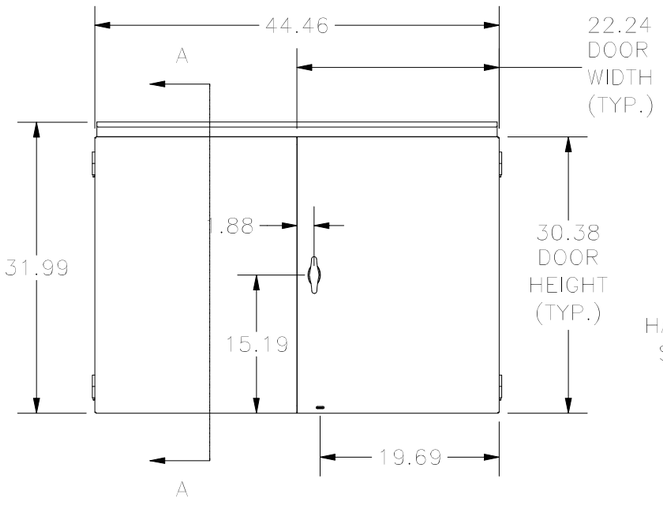

FRONT VIEW

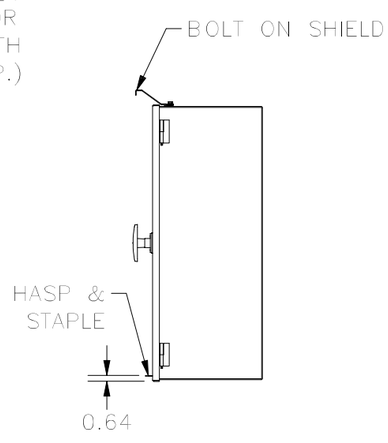

RIGHT SIDE VIEW

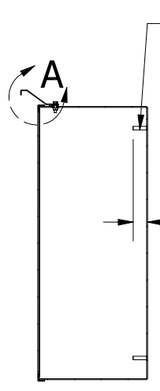

SECTION A-A
(INSIDE LEFT OF ENCL.)

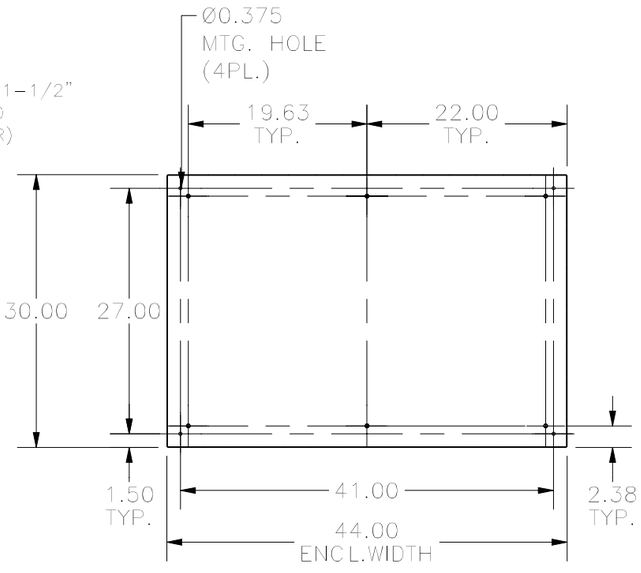

SECTION B-B
(INSIDE BACK OF ENCL.)

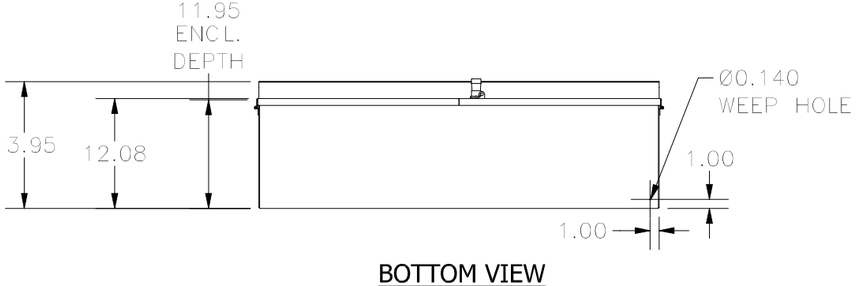

BOTTOM VIEW

PART#: CTDD443012
(DATA SUBJECT TO CHANGE WITHOUT NOTICE)

THIS DRAWING IS PROPERTY OF HUBBELL INC.
WIEGMANN
ALL INFORMATION IS PROPRIETARY AND NOT TO BE DUPLICATED