SEALMASTER® Rod End Bearings



Basic Construction Type: Female 3 pc. General Purpose, Commercial

Outer Member Material: Carbon Steel with Protective Plating for Corrosion Resistance

Race Material: Delrin*

Ball Material: Alloy Steel, Heat Treated, Chrome Plated

Feature: Self-Lubricating

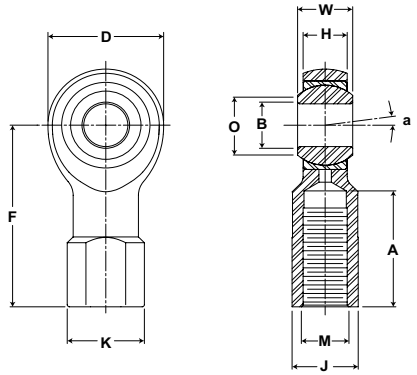

CTFD Series Female Rod Ends

Part No.	Dimensions inch / mm											Max Static Radial Load lb/N	Misalignment Angle a	Unit Wt. lb/kg
	B	W	H	D	F	A	M	K	J	Ball Diam.	O			
	+.0025 -.0005	+.005 -.005	+.010 -.010	+.031 -.031	+.015 -.015	Min.	Class UNF-2B	Ref.	+.010 -.010	Ref.	Ref.		Deg. +/-	
CTFD-3	.1900	.312	.250	.625	1.062	.531	#10-32	.375	.312	.437	.306	800	6 1/2	.030
	4.826	7.92	6.35	15.88	26.97	13.49		9.53	7.92	11.10	7.77	3559		.014
CTFD-4	.2500	.375	.281	.750	1.312	.719	1/4-28	.469	.375	.500	.331	1060	8	.060
	6.350	9.53	7.14	19.05	33.32	18.26		11.91	9.53	12.70	8.41	4715		.027
CTFD-5	.3125	.437	.344	.875	1.375	.719	5/16-24	.531	.437	.625	.447	1570	7	.080
	7.938	11.10	8.74	22.23	34.93	18.26		13.49	11.10	15.88	11.35	6984		.036
CTFD-6	.3750	.500	.406	1.000	1.625	.906	3/8-24	.688	.562	.718	.517	2150	6	.140
	9.525	12.70	10.31	25.40	41.28	23.01		17.48	14.27	18.24	13.13	9564		.064
CTFD-7	.4375	.562	.437	1.125	1.812	1.031	7/16-20	.750	.625	.812	.586	2600	7	.180
	11.113	14.27	11.10	28.58	46.02	26.19		19.05	15.88	20.62	14.88	11565		.082
CTFD-8	.5000	.625	.500	1.312	2.125	1.156	1/2-20	.875	.750	.937	.698	3420	6	.290
	12.700	15.88	12.70	33.32	53.98	29.36		22.23	19.05	23.80	17.73	15213		.132
CTFD-10	.6250	.750	.562	1.500	2.500	1.469	5/8-18	1.000	.875	1.125	.839	4620	8	.430
	15.875	19.05	14.27	38.10	63.50	37.31		25.40	22.23	28.58	21.31	20551		.195
CTFD-12	.7500	.875	.687	1.750	2.875	1.719	3/4-16	1.125	1.000	1.312	.978	6600	7	.640
	19.050	22.23	17.45	44.45	73.03	43.66		28.58	25.40	33.32	24.84	29358		.290

NOTES

1. To order left hand threaded units add letter “L” to part number prefix; Example: CTFDL-8.
2. Add letter “Y” to the part number suffix to indicate stud; Example: CTFD-8Y.
3. For design modifications, see page J-13.
4. Caution: Prolonged exposure to ultraviolet light can cause loss of mechanical properties in DELRIN material. Consult Application Engineering for application assistance.

* The following trade names, trademarks and/or registered trademarks are used in this material by Emerson Power Transmission Corporation are NOT owned or controlled by Emerson Power Transmission Corporation and are believed to be owned by the following parties: Delrin;E.I. du Pont de Nemurs and Company. Emerson Power Transmission Corporation cannot and does not represent or warrant the accuracy of this information.

Metric dimensions for reference only.

Not all parts are available from stock. Please contact customer service for availability (800) 626-2120.

For more information on bearing capabilities outside of our standard offering, please contact Application Engineering (800) 626-2093.