ALTRA INDUSTRIAL MOTION

Worm, Helical and Bevel Gear Drives









Boston® Gear

An Altra Industrial Motion Company

Boston Gear



Boston Gear offers the industry's largest line up of reliable speed reducers, gearing and other quality drivetrain components.

With more than 125 years of frontline experience, Boston Gear is recognized globally as a premier resource for extremely reliable, high-performance power transmission components. Boston Gear offers the industry's most comprehensive product array featuring more than 30,000 standard products combined with the ability to custom engineer unique solutions when required. Product lines include standard enclosed gear drives, custom speed reducers, AC/DC motors, DC drives and Centric brand overload clutches and torque limiters.



VISIT US ON THE WEB AT
BOSTONGEAR.COM

Altra Industrial Motion

Altra is a leading multinational designer, producer and marketer of a wide range of mechanical power transmission products. We sell our products in over 70 countries throughout the world. Our products are frequently used in critical applications, such as fail-safe brakes for elevators, wheelchairs and forklifts, and in high-volume manufacturing processes, where the reliability and accuracy of our products are critical in both avoiding costly down time and enhancing the overall efficiency of manufacturing operations.

Our products are marketed under a variety of well recognized and established manufacturing brand names. These leading brands are Ameridrives, Boston Gear, Warner Electric, Formsprag Clutch, TB Wood's, Industrial Clutch, Kilian, Marland Clutch, Nuttall Gear, Stieber Clutch, Twiflex Ltd, Huco, Bibby Turboflex, Matrix, Inertia Dynamics, Delroyd Worm Gear, Warner Linear, Wichita Clutch, Lamiflex Couplings, Svendborg Brakes, Guardian Couplings and Stromag.

VISIT US ON THE WEB AT
ALTRAMOTION.COM



Table of Contents

Introduction **1-5**

Product Selection Reference Guide **6-9**

A **700 Series SINGLE Reduction Worm Gear** **11-66**

• STAINLESS STEEL Worm Gear 53-63

• STAINLESS STEEL FSP5 Multiplier 64

B **700 Series DOUBLE Reduction Worm Gear** **67-101**

C **700 Series DOUBLE Reduction — Helical Worm** **103-126**

D **700 Series Accessories** **127-132**

• PosiVent® Option 129

E **700 Series Operating Instructions** **133-139**

• Lifetime Warrenty 140

F **113 and 309 Series SUB-FRACTIONAL Horsepower Worm Gear** **141-148**

G **800B Series — In-Line Helical** **149-195**

H **800BR Series — Helical Worm** **197-238**

I **HM Series DOUBLE C-FACED Helical Multiplier** **239-246**

J **200 Series – Helical** **247-269**

K **600B Series – Helical** **271-303**

L **RA-Right 90 – Spiral Bevel** **305-308**

M **R/VR100, 200 – Spiral Bevel** **309-314**

N **R1000 – Bevel** **315-328**

O **FSP5/5A Motor Multiplier** **329-332**

P **MVS Mechanical Adjustable Speed** **333-338**

Q **Motors and Adjustable Speed Drives** **339-350**

R **Engineering Section** **351-362**



700 Series Features

- Precision ground worm threads maximize gearbox efficiency. At low ratio's efficiencies of 90 to 95% are common.
- The 700 Series' large oil reservoir provides efficient heat dissipation and lubrication for longer operating life.
- Its multi-position mounting flexibility allows for installation in virtually any position.
- Housings are straddle-milled, top and bottom, for precise alignment of horizontal and vertical bases.
- Internal baffles assure positive, leak-free venting.
- The 700 Series' rugged housing, fabricated of fine-grained, gear-quality cast iron, provides maximum strength for maximum durability, as well as greater precision during worm and gear alignment.
- Boston Gear's 700 Series high-strength bronze worm gear is straddle mounted between heavy-duty tapered roller bearings to increase thrust and overhung load capacities, sizes 713-760.
- Our 700 Series' high strength steel output shaft assures capacity for high torque and overhung loads.
- Pipe plugs allow easy fill, level, and drain in any mounting position
- The 700 Series' super-finished oil-seal diameters on both input and output shafts extend seal life.
- Both 2D and 3D CAD drawings are available from BostSpec2 at www.bostongear.com
- Their availability via Reducer Express™, Boston Gear's innovative guaranteed delivery program, means never having to wait.

200 Series Optimount™ Features

- Superior machining affords highly accurate alignment for exceptional performance - an especially important consideration when purchasing a speed reducer for use as an integral part in OEM equipment.
- Standard hollow output shafts allow gear drives to be connected directly to the drive train, increasing overall efficiency.
- Optional shaft and base kits allow conversion of the reducer to a stand-alone gear drive for greater flexibility.
- Washdown units are available in white or stainless steel epoxy coatings, both USDA certified and approved.
- Horizontal and vertical base mounted configurations make the Optimount™ series extremely versatile.
- Their availability via Reducer Express™, Boston Gear's innovative guaranteed delivery program, means never having to wait.
- CAD drawings are available from BostSpec2 at www.bostongear.com

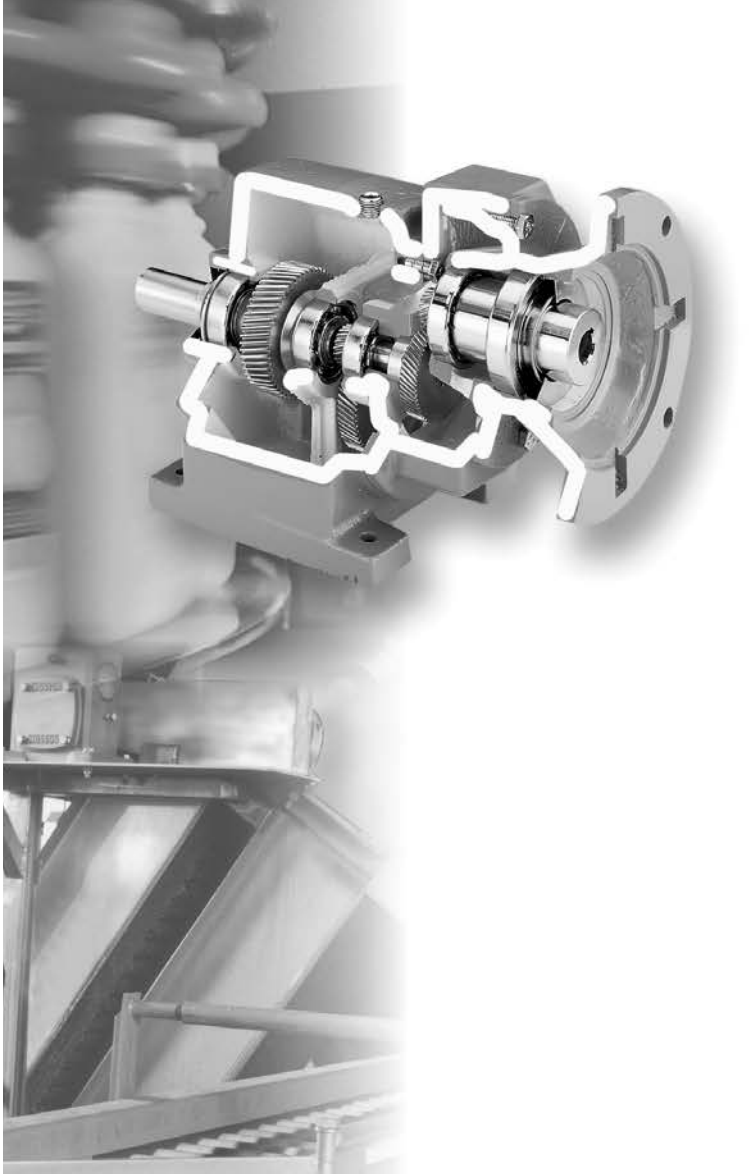

800 Series Features

- Because the 800 Series is dimensionally interchangeable with many U.S. and European in-line helical gear drives, it offers maximum flexibility.
- The standard NEMA C-face design will accept any standard NEMA motor, making it exceptionally versatile.
- Ratios up to 70:1 in just two stages means increased efficiency and reduced case size.
- Accessible oil seals simplify routine product maintenance.
- 800 Series drives come pre-filled with synthetic lubrication for your specific mounting position. Sizes 3 and 4 are lubricated for life which promotes trouble-free operation.
- An original Boston Gear design available from our ISO9002 certified speed reducer facility.
- Washdown duty units in white or stainless steel epoxy coatings make these gear drives ideal for the most severe washdown environments.
- CAD drawings are available from BostSpec2 at www.bostongear.com
- Their availability via Reducer Express™, Boston Gear's innovative guaranteed delivery program, means never having to wait.



600 Series Features

- A selection comprising six common sizes permits use in many different applications.
- All Models are a more compact quill style
- Single, double, and triple reduction models provide a wide array of ratios for increased versatility.
- Base-mount and output-flange-mount models further increases versatility.
- The 600 Series is assembled in Boston Gear's ISO 9002-certified facility to ensure precise quality control.
- Available in White BK and Stainless Steel Bost-Kleen™ options.
- And because the 600 Series is available through Boston Gear's Guaranteed Same Day Shipment, your needs will be met in the timeliest way possible.

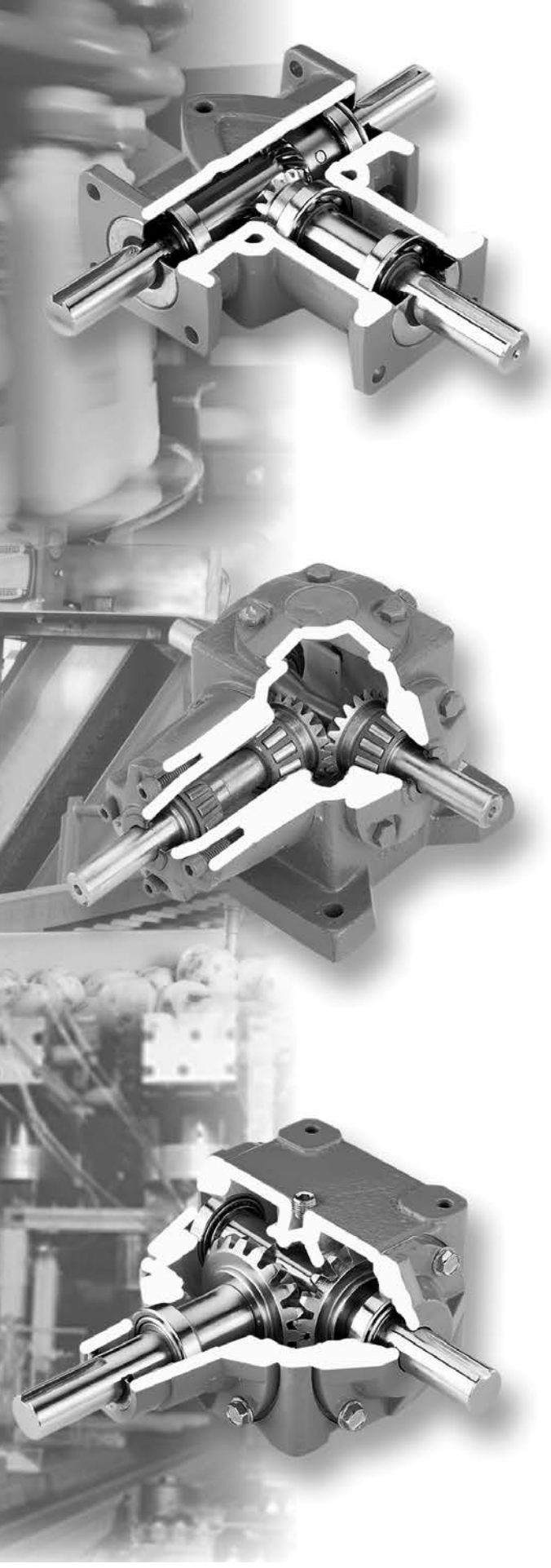

Right 90 Series Features

- Our spiral-bevel gear drives are designed for performance that's reliable, efficient, and as noise-free as possible.
- Input and output shaft flanges simplify mounting and installation.
- These gear drives can be used to either reduce or increase speed.
- Single and double-projecting output shafts for application flexibility.
- Ground alloy steel shafts are mounted on precision ball bearings for smooth operation.
- Pre-lubrication designed to last for the life of the drive improves performance and reduces maintenance.
- Boston Gear's Guaranteed Same Day Shipment Program ensures that you get what you need when you need it.

R100/R200 Series Features

- These spiral-bevel gear drives are designed for operation that's as reliable as it is quiet.
- Their shafts are heat treated and alloy-steel mounted on heavy-duty, tapered roller bearings for smoother operation.
- Their housings are made of precision-machined cast iron to ensure accurate, permanent alignment of the gears for superior performance.
- Double-bearing input support extends horsepower capacity and increases durability.
- Because the R-VR Series is available through Boston Gear's Guaranteed Same Day Shipment Program, it's the one you can count on to be there when you need it.

R1000 Series Features

- Straight-tooth bevel gears have teeth that are made from precision-forged alloy steel for maximum strength, as well a case hardened for increased durability.
- Input and output shafts are constructed from ground and polished heat-treated alloy steel to further enhance the overall toughness of these drives.
- Precision-machined, one-piece, quality cast-iron housings mean less maintenance and greater reliability.
- For greater support and rigidity, all shafts are supported by two tapered-roller bearings, while several models offer a straddle design with the gears supported on both sides.
- Flush-types vented-filler plugs with sintered-bronze breather inserts further reduce contamination.
- Boston Gear's Guaranteed Same Day Shipment Program ensures that you get what you need when you need it.

Our Quality Policy

Driven by the voice of the customer and total associate involvement, Boston Gear will strive, through continuous improvement, to provide products and services that meet or exceed customer expectations.

www.bostongear.com

Boston Gear's new, easy to navigate web site offers a variety of tools designed to simplify the selection and ordering process. Powered by advanced Internet XML technology, www.bostongear.com offers 24 hour access to the industry's premier source for power transmission information:

- **BostSpec2 – Boston Gear's award winning open and enclosed gearing configurator. Based upon your applications requirements, select from over 84,000 parts, view specifications, even download CAD drawings**
- **Products – get the most current product information, features, benefits, or application data**
- **Literature – all of Boston Gear's catalogs, brochures, specification sheets, and installation manuals are available for immediate down loading**
- **Distributor Locator – find your local stocking Boston Gear distributor**

Whether you're looking to design a worm gear speed reducer to fit your application, get information on Boston Gear's newest products, or receive the latest news about the company, www.bostongear.com is your answer.

The Second Century of Service

Started in 1877 as a machine shop making gear cutting machines, Boston Gear has led the growth of the power transmission industry for more than a century. In its early years, Boston Gear introduced the concepts of gear standardization and stock gears – innovations of enormous benefit to power transmission system designers, specifiers and users.

Boston Gear was the early pioneer in enclosed drives, a category it still dominates with dependable, high-performance products like Worm, Helical and Bevel Gear Drives.

Today, Boston Gear provides the widest range of integrated motion control products from one source. The convenience of this single-source capability is yours when you deal with Boston Gear.

Engineering Services

The Boston Gear Engineering Group can satisfy your technical needs through skillful application of standard products or development of custom designs. Creating specials is an important aspect of customer service. It is supported by R & D personnel who use microprocessor-controlled equipment to collect and monitor data on materials and product performance.

Computer-Aided-Design (CAD) systems help Boston Gear engineers create new approaches to broad industrial challenges or specific customer needs. Computer simulation and testing at critical stages ensure that their designs are practical.

Manufacturing Excellence

Boston Gear manufactures more than 50,000 products in-house at our operations in Charlotte, North Carolina. Production is efficiently organized into manufacturing cells under group technology. For example, turning and grinding are combined under the control of a single operator in each cell. This approach encourages a sense of responsibility and pride of workmanship, to gain consistently high-quality output.

Computerized production control provides close supervision over scheduling and resource planning, coupled with the flexibility to fit your requirements smoothly into the master schedule. Other dedicated computer controls within the production department govern the ordering and delivery functions to keep operations lean and efficient.

Product Selection / Reference Guide

700 Series Single Reduction Flanged & Non-Flanged Reducers

Ordering Information – Page 14-15
Lubrication – Pages 15, 20-33
Selection/Rating Information – Page 21
Motor Selection – Pages 340 and 348



F700 BASIC
Page 34



QC700 BASIC
Page 34



F/QC700B
Pages 35



F/QC700BRB
Page 37



F/QC700C/D
Page 38



HF/HQC 700
Page 40



HF700R/L
Page 41



SF700
Page 42



SF700V/W
Page 43



700 BASIC
Page 44



700B
Page 45



700A
Page 46



700C/D
Page 47



H700
Page 49

700 Series Double Reduction Flanged & Non-Flanged Reducers

Ordering Information – Pages 68-69
Lubrication – Pages 71, 76-81
Selection/Rating Information – Page 71
Motor Selection – Pages 340 and 348



H700R/L
Page 50



S700
Page 51



S700V/W
Page 52



SSF/SSHF 700
Page 53



FWA/QCWA700 BASIC
Page 82



HFWA/HQCWA700
Page 83



SFWA 700 BASIC
Page 85



FWC/QCWC700 BASIC
Page 87



WA700 BASIC
Page 92



HWA OR HWC
Page 92 & 98



WC700 BASIC
Page 97



SWC700 BASIC
Page 100

700 Series Accessories And Options Posivent®

Ordering Information – Pages 128-131



309 & TW113A Sub-Fractional HP Reducers

Ordering Information – Pages 142-143
Lubrication – Pages 144-148
Motor Selection – Pages 340 and 348



F309B
Page 143



TW113A
Page 148

Motor Multiplier®



FSP Series
Pages 329-332

HMF Helical Multiplier Series



HMF Series
Selection Pages 239
Dimensions - Page 245

Optimount® F200 Series Hollow Shaft Helical Gear Flanged Input

Selection Pages 250-251



Basic Model
Hollow Output Shaft
Dimensions - Page 259



F200H Series Horizontal
Base Model Flange Input
Dimensions - Page 260



F200V Series Vertical
Base Model Flange Input
Dimensions - Page 260

Optimount® 200 Series Hollow Shaft Helical Gear Non-Flanged Input

Selection Pages 253-258



Basic Model
Hollow Output Shaft
Dimensions - Pages 261



200H Series
Horizontal Base Model
Dimensions - Page 262



200V Series
Vertical Base Model
Dimensions - Page 262

Optimount® 200 Series Accessories and Options



Shaft Kits/Reaction Rods
Dimensions - Page 264



Base Kits
Vertical/Horizontal
Dimensions - Page 265

F800B Series In-Line Helical Gear Flanged Input

Selection Pages 159-175



Double Reduction
Foot Mounted, Flange Input
Dimensions-Page 186



Triple Reduction
Foot Mounted, Flange Input
Dimensions-Page 187



Double Reduction
Output Flange Mount,
Flange Input
Dimensions-Page 188



Triple Reduction
Output Flange Mount,
Flange Input
Dimensions-Page 189

Product Selection / Reference Guide

800B Series In-Line Helical Gear Non-Flanged Input

Selection Pages 176-185



Double Reduction
Foot Mounted
Dimensions-Page 190



Triple Reduction
Foot Mounted
Dimensions-Page 191



Double Reduction
Output Flange Mount
Dimensions-Page 192



Triple Reduction
Output Flange Mount
Dimensions-Page 193

800B Series Helical Worm Gear Reducer

Selection Pages 207-221



Double Reduction Flange
Dimensions-Page 232



Triple Reduction Flange
Dimensions-Page 233



Double Reduction
Non-Flange
Dimensions-Page 234



Triple Reduction
Non-Flange
Dimensions-Page 235

F600B Series Helical Gear Flanged Input

Selection Pages 278-295

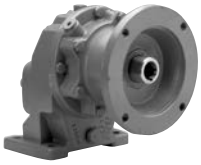

Single Reduction
Foot Mounted, Flange Input
Dimensions - Page 297



Double & Triple Reduction
Foot Mounted, Flange Input
Dimensions - Page 298

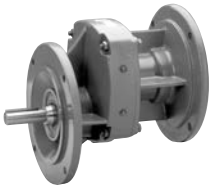

Single Reduction
Output Flange Mounted
Dimensions - Page 299



Double & Triple Reduction
Output Flange Mounted
Dimensions - Page 300

600B Series Helical Gear Non-Flanged Input

Selection Pages 278-295



Single Reduction
Foot Mounted
Dimensions - Page 301



Double & Triple Reduction
Foot Mounted
Dimensions - Page 302

Right-90 Series Spiral Bevel



Right-90 Series
Pages 305-308

R100/R200 VR100/VR200 Series Spiral Bevel



R100/R200 Series
Horizontal Base Model
Dimensions-Page 313



VR100/VR200 Series
Vertical Base Model
Dimensions-Page 313

R1000 Series Straight Bevel



R1000 Series
Pages 316-327

Mechanical Variable Speed



MVS Series
Pages 334-337

Motors and Brakes



NEMA C-Face
AC-Motors
Pages 340-345



NEMA C-Face
DC Motors
Pages 346-347



BostKleen™ / Stainless
Pages 348



Double C-Face AC Brakes
CMBA Series
Pages 349

Notes



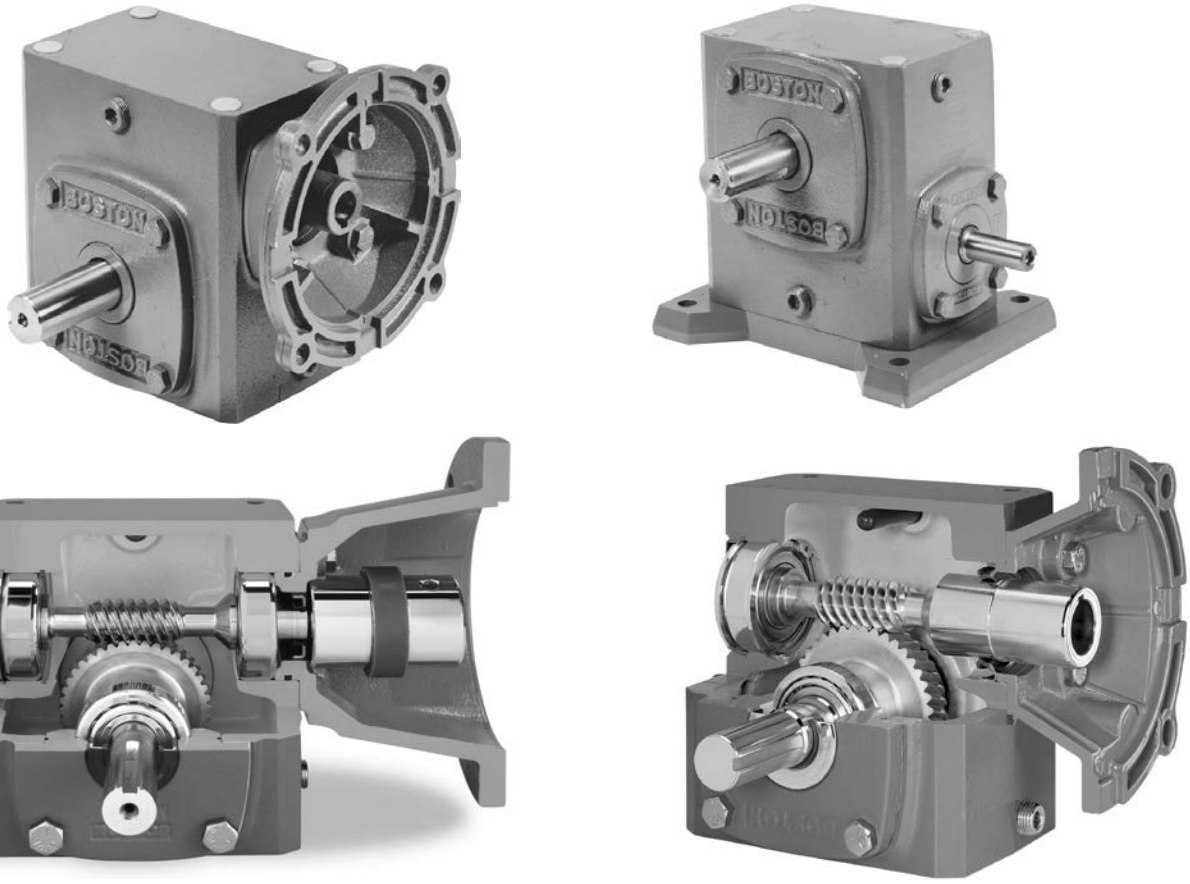

Section Contents

Product Reference Guide 12-13

Numbering System / How To Order . . . . . 14 & 16

Selection Procedure 17

Assemblies and Mounting Positions 18-19

Recommended Lubricants 20

Output RPM Selection Tables 22-29

RATIO & CAPACITY Selection Tables 30-33

REDUCER Dimensions 34-52

STAINLESS Washdown Duty 53-60

Accessories 128-132

A

Single Reduction Flanged Reducers & Non-Flanged Reducers

Ordering Information – **Page 14-15**
Selection/Rating Information–**Pages 17, 22-33**
Lubrication – **Page 20**
Motor Selection – **Pages 339 & 348**

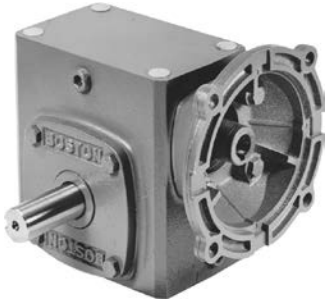

F700 BASIC
Dimensions — Page 34

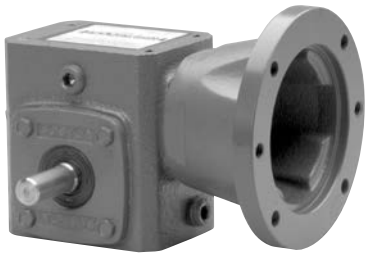

QC700 BASIC
Dimensions — Page 34



F/QC700B
Dimensions — Page 35



F/QC700BRB
Dimensions — Page 37



F/QC700C/D
Dimensions — Page 38



HF/HQC/SF700
Dimensions — Page 35



HF/HQC-R/L + SF700V/W
Dimensions — Page 37



700 BASIC
Dimensions — Page 38



700B
Dimensions — Page 45

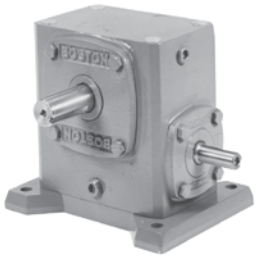

700A
Dimensions — Page 46

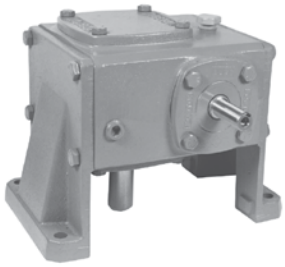

700C/D
Dimensions — Page 47

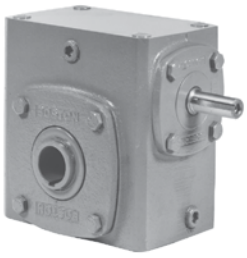

H/S700
Dimensions — Pages 49



H700R/L
Dimensions — Page 50

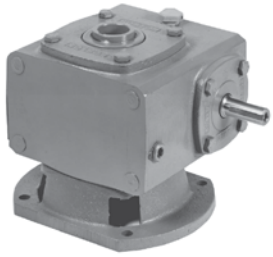

S700V/W
Dimensions — Page 52

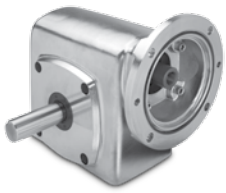

SSF700
Dimensions — Page 59



SSHF700
Dimensions — Page 59



SSHF700V/W
Dimensions — Page 60



SSHF700WB
Dimensions — Page 62



SSHF700WD
Dimensions — Page 63



SSFSP5
Dimensions — Page 66

A

700 Series Right Angle Worm Gearbox - Single Reduction

SBK C H QC 7 38 B – 40 K E Z T – B7 –

Reducer Material/Paint
Blank–Cast Iron, Std. Gray paint
BK – Cast Iron, White *BostKleen* paint
SBK – Cast Iron, Stainless *BostKleen* paint
SS – Stainless Steel material – no paint

Flange/Carrier/Base Material
Blank–Standard material
C – Cast Iron

Output Shaft Style
Blank–Solid Output Shaft
H – *BostMount* Hollow Output (setscrews both sides, bore size selectable)
S – Hollow Output (setscrews one side, bore size fixed)

Input Shaft Style
Blank–Solid Projecting Input Shaft
F- Quill Style Motor Flange
RF – Coupling Style Motor Flange
QC – *Quick Connect* Motor Flange (close coupled)

7 – 700 Series

Center Distance (inches)
10 – 1.00
13 – 1.33
15 – 1.54
18 – 1.75
21 – 2.06
24 – 2.38
26 – 2.62
30 – 3.00
32 – 3.25
38 – 3.75
52 – 5.13
60 – 6.00

Base/Mounting Attachment*
Blank–No Base
A – Horizontal base – Top Mount
B – Horizontal base – Bottom Mount
BRB – Riser Block – Top Mount
C – Vertical High base – Right Mount
D – Vertical Low base – Right Mount
E – Vertical High base – Left Mount
F – Vertical Low base – Left Mount
R – *BostMount* Bracket – Right Mount
L – *BostMount* Bracket – Left Mount
M – Conveyor Flange Adptr – Right Mount
N – Conveyor Flange Adptr – Left Mount
V – Hollow Output Flange – Right Mount
W – Hollow Output Flange – Left Mount
X – Vertical Base – Rear Mount
Y – Vertical Base – Front Mount

*Projection of Base/Flange/Bracket assumes one is always looking into the input shaft in the #1 mounting position

Exact Gear Ratio
Ratio to 1

5	25
7	30
7.5	40
10	50
12	60
15	80
20	100

Or Consult Factory for Availability

Lubrication
Blank–No lubrication
K – Klubersynth UH1 6-460
S – Mobil SHC 634
X – Mobil 600W

Endcap or Fan (732-760 only)
E – Endcap (standard)
F – Fan

Vent
Blank–Standard Vent
P – Pressure Vent (5 psi)
Z – Posivent (sealed)

Oil Seal
Blank– Standard Seal
T – Two Standard Input Seals
C - High Pressure/ wash down seals for stainless gearboxes

NEMA Motor Mounting

BORE CODE	NEMA MOUNTING	INPUT BORE	KEYWAY
B4	42CZ	.500"	1/8 x 1/16
B5	56C	.625	3/16 x 3/32
B7	140TC/180C	.875	3/16 x 3/32
B9	180TC/210C	1.125	1/4 x 1/8
B11	210TC/250UC	1.375	5/16 x 5/32
B13	250TC	1.625	3/8 x 3/16

Blank Solid Input Shaft (No Flange)

A

HS 1 – P24 –

***BostMount* Output Bore Code**

For H Series Only Specified in 1/16" increments.

Example: 1 1/4" = P20

5/8 – **P10**	1-1/2 – **P24**
3/4 – **P12**	1-5/8 – **P26**
7/8 – **P14**	1-11/16 – **P27**
15/16 – **P15**	1-3/4 – **P28**
1 – **P16**	1-7/8 – **P30**
1-1/16 – **P17**	1-15/16 – **P31**
1-1/8 – **P18**	2 – **P32**
1-3/16 – **P19**	2-1/8 – **P34**
1-1/4 – **P20**	2-3/16 – **P35**
1-5/16 – **P21**	2-1/4 – **P36**
1-3/8 – **P22**	2-7/16 – **P39**
1-7/16 – **P23**	3-7/16 – **P55**

See catalog page 128 for availability by center distance.
Consult Factory for Metric Bores

Mounting Positions

Blank -No Lubrication Supplied

For Factory Prelubrication Indicate Mounting Position

1 – Standard Mounting (Worm over)
2-6 – Refer to Mounting Positions in catalog pages 18-19

Output Shaft

(When facing Input and worm on top)

G - Carbon Steel Output Projection – Left
H - Carbon Steel Double Output Projection
J - Carbon Steel Output Projection – Right
GS - Stainless Output Projection – Left
HS - Stainless Double Output Projection
JS - Stainless Output Projection – Right

Clutch/Brake

CMBA140TR-6 –

Common C-Face Brakes Installed

115/230 VAC 60hz	Ft-Lb	Bore Code
CMBA56R-3	3	B5
CMBA56R-6	6	B5
CMBA140TR-6	6	B7

208-230/460 VAC 60hz	Ft-Lb	Bore Code
CMBA56U-3	3	B5
CMBA56U-6	6	B5
CMBA140TU-6	6	B7

Other sizes available. See catalog page 349.

Motor

HUTF-IDB – 3

Motor Conduit box Orientation

(When looking at fan end of motor and gearbox is in mounting position #1)

0 – 12 O'clock
3 – 3 O'clock(standard for G & H shaft assemblies)
6 – 6 O'clock
9 – 9 O'clock (standard for J shaft assemblies)

Common C-Face Motors Installed

AC Voltage	Bore Code	115/208-230-1-60	208-230/460-3-60
1/4 HP	B5	**DRTFB**	**DUTFB**
1/3 HP	B5	**ERTFB**	**EUTFB**
1/2 HP	B5	**FRTFB**	**FUTFB**
	B5		**FUT-SS**
	B5		**FUTF-IDB**
3/4 HP	B5	**GRTFB**	**GUTFB**
	B5		**GUT-SS**
	B5		**GUTF-IDB**
1 HP	B5	**HRTF-5/8B**	**HUTF5/8B**
	B5		**HUT5/8-SS**
	B5		**HUTF5/8-IDB**
	B7		**HUTFB**
	B7		**HUT-SS**
	B7		**HUTF-IDB**
1.5 HP	B7		**JUTFB**
	B7		**JUTF-SS**
	B7		**JUTF-IDB**
2 HP	B5		**KUTF5/8B**
	B7		**KUTFB**
	B7		**KUTF-SS**
	B7		**KUTF-IDB**
3 HP	B9		**LUTFB**
	B9		**LUTF-SS**
	B9		**LUTF-IDB**
5 HP	B9		**MUTFB**

Other motors available, please see catalog pages 339 to 348.

T – Totally enclosed non-ventilated
TF – Totally enclosed fan cooled
SS – Stainless
IDB – Inverter Duty (10:1 turn down constant torque)
B5 – 56C
B7 – 140TC
B9 – 180TC

Single Reduction Numbering System / How to Order

Style	Size	Base	Ratio	Lubrication	Fan	Vent	Oil Seals	NEMA Mounting	Shaft Assembly	Mounting Position	Output Bore Code

A

Style **Designates reducer or flanged reducer, projecting or hollow output shaft.**

- **C** – Designates cast iron flange and base. (Standard on motor flanges 3 HP (180TC) and up and all bases except horizontal (710-726).
- **Blank** – Single reduction reducer with projecting input and output shafts. (No code letter required).
- **H** – Single reduction reducer with projecting input and *BostMount* hollow output shaft. (No flange) (713-738)
- **S** – Single reduction reducer with hollow output shaft. (Sizes 718, 721, 726 and 732).
- **F** – Single reduction flanged reducer (Quill types) with projecting output shaft.
- **HF**– Single reduction flanged reducer (Quill types) with *BostMount* hollow output shaft. (Sizes 713-738)
- **SF**– Single reduction flanged reducer (Quill types) with hollow output shaft. (Sizes 718, 721, 726 and 732)
- **QC** – Single reduction flanged reducer (Coupling types) with projecting output shaft.
- **HQC**– Single reduction flanged reducer (Coupling types) with *BostMount* hollow output shaft. (Sizes 713-738)
- **RF**– Single reduction flanged reducer (Coupling types) with Projecting output shaft. 752 - 760 Size Only
- **BK**– Designates Cast Iron, White *BostKleen* paint
- **SBK**– Designates Cast Iron, Stainless *BostKleen* paint
- **SSF**– Stainless Steel Single reduction flanged reducer (Quill types) with projecting output shaft.
- **SSHF**– Stainless steel single reduction flanged reducer with *BostMount* hollow output shaft.

Size **Center distance, rounded off.**

710 - 1.00	**721** - 2.06	**732** - 3.25
713 - 1.33	**724** - 2.38	**738** - 3,75
715 - 1.54	**726** - 2.62	**752** - 5.16
718 - 1.75	**730** - 3.00	**760** - 6.00

Base **Base positions relative to output shaft. Shipped separately as Base Kits. See Page 129.**

- **Blank**– No base kit supplied
- **A,B** – Horizontal bases
- **C,D,E & F** -Vertical Bases*
- **R/L** – BostMount Output Bracket
- **X** – Input Vertical Up
- **Y** – Input Vertical Down
- **BRB** – Horizontal base with riser block
- **V,W** – Flanged bases, available on "S" hollow shaft models only. Factory assembled.
- **M/N** – Flanged bases, available on "CFA" hollow shaft models only.

*For E, F vertical base arrangements, see Pages 18, 19.

Ratio **See Selection Tables for available ratios**

Lubrication **Optional Prelubrication.***

- **Blank** - No Lubrication supplied.
- **K** – Klubersynth UH1 6-460
- **S** – Mobil SHC634 Synthetic Lubricant
- **X** – Mobil 600W

*When specifying optional prelubrication, include mounting position after shaft assembly.

Fan **Optional fan available on sizes 732-760 single reduction only.** Shipped separately as Fan Kit. See Page 130.

Blank - No Fan Kit. **E** - End Cap (standard) **F** - Fan Kit

Vent **Pressure Relief.**

- **Blank** – Standard Vent
- **P** – 5 PSI Vent
- **Z** – PosiVent® Pressure Compensationg Bladder

Oil Seals

- **Blank** – Standard Seal
- **T** – Double Input Seals. Recommended for mounting positions 2, 3, 4, 6
- **C** - High pressure/wash down configuration for stainless gearboxes. Contains double input seals and axial face seals on the output.

NEMA Mounting Designates flange size and input bore diameter. Flanged reducers only. Leave blank for projecting input reducers.

Bore Code	NEMA Mounting	Input Bore	Keyway
B4	42CZ	.500"	1/8 x 1/16
B5	56C	.625	3/16 x 3/32
B7	140TC/180C	.875	3/16 x 3/32
B9	180TC/210C	1.125	1/4 x 1/8
B11	210TC/250UC	1.375	5/16 x 5/32
B13	250TC	1.625	3/8 x 3/16

See page 98 for Mounting Dimensions.

Shaft Assembly Assembly shaft arrangements. See assemblies, pages 18 and 19.

- **G** – Standard assembly (left)
- **H** – Double output shaft projection
- **J** – Opposite to standard (right)
- **GS** – Stainless standard assembly (left)
- **HS** – Stainless double output shaft projection
- **JS** – Stainless opposite to standard (right)

Mounting Position Designates the position of oil and vent plugs with respect to mounting.

- **Blank**– For units not supplied prelubricated.
- **1-6** – See pages 18 and 19.

Output Bore Code Specified in 1/16" increments. See page 128 for complete offering. Example 1 1/4" = P20 For H Series only.

How to Order

When ordering reducers please include code letters for Style, Size, Base (if required), Ratio, Fan (if required), Lubrication (if required), NEMA Mounting (if flanged reducer), Shaft Assembly and Motor (if required).

EXAMPLE: Required size, 721 Quill types flanged reducer, 30:1 ratio, 5/8" input bore, standard assembly, with horizontal base, no lubrication. Motor to be 3/4 HP, 1750 RPM, 230/460 Volt, 3 Phase, 60 cycle, open dripproof.

F	721	B	–	30	–	B5	–	G	–	GUB3

1. Reducer, Base and Motor Shipped separately:
   ORDER: Reducer - **F721-30-B5-G**
   Base Kit - **56587**
   Motor - **GUB3**
2. Reducer, Base and Motor assembled:
   ORDER: **F721B-30-B5-G-GUB3**

To properly select a speed reducer, the following application information must be known:

Input RPM (Ratio)
Output Torque
Input Horsepower
Service Factor

Non-Motorized Speed Reducer

1. Determine service factor from table below.
2. Determine design horsepower.
   Design Horsepower =
   Application Load x Service Factor
3. Select a speed reducer size that satisfies output RPM, service class and/or output torque requirements.
4. Check overhung load capacity.

Motorized Speed Reducer

1. Determine service class from table below.
2. Select a reducer size that satisfies output RPM, service class and/or output torque requirements.
3. Check overhung load capacity.

Service Factor Table

AGMA Class of Service	Service Factor	Operating Conditions
I	1.00	Moderate Shock-not more than 15 minutes in 2 hours.
		Uniform Load-not more than 10 hours per day.
II	1.25	Moderate Shock-not more than 10 hours per day.
		Uniform Load-more than 10 hours per day.
	1.50	Heavy Shock-not more than 15 minutes in 2 hours.
		Moderate Shock-more than 10 hours per day.
III	1.75	Heavy Shock-not more than 10 hours per day.
	2.00	Heavy Shock-more than 10 hours per day.

For complete AGMA Service Factors and Load Classifications, see Engineering Section, Pages 352 and 355.

Single Reduction Selection Tables

Capacity Selection Tables on pages 22-29 list catalog numbers and ratios of both reducers and gearmotors. Output RPM, output torque and horsepower are all based on 1750 RPM input. Output torque and horsepower capacities at other input RPM's are listed on pages 30-33. For motorized reducer selection, select the desired output RPM and refer to the gearmotor ratings column. For non-motorized reducers, refer to the reducer gear capacity columns. For the desired HP, torque and service factor that satisfies your requirements, a 700 Series basic reducer number will be indicated. For complete catalog numbering system, descriptions and options, refer to Pages 14-15.

Overhung Load

If the output shaft of a speed reducer is connected to the driven machine by other than a flexible coupling, an overhung load is imposed on the shaft. This load may be calculated as follows:

$$OHL = \frac{2TK}{D}$$

OHL = Overhung Load (LB.)
T = Shaft Torque (LB.IN.)
D = PD of Sprocket, Pinion or Pulley (IN.)
K = Load Connection Factor

Load Connection Factor

Sprocket or Timing Belt 1.00
Pinion and Gear Drive 1.25
Pulley and V-Belt Drive. 1.50
Pulley and Flat Belt Drive 2.50

An overhung load greater than permissible load value may be reduced to an acceptable value by the use of a sprocket, pinion or pulley of a larger PD. Relocation of the load closer to the center of reducer will also increase OHL capacity.

Permissible Overhung Loads and Output Shaft Thrust Loads are listed for each reducer in the Tables on pages 30-33.

Maximum Input Speeds

710, 713	4500 RPM
715 through 732	3600 RPM
738, 752	2500 RPM
760	1750 RPM

NOTE: Horsepower ratings for 1750 RPM should not be exceeded when operating at higher input speeds.

Ratings shown reflect maximum gear capacity with Klubersynth UH1 6-460 lubricant. The use of other lubricants may reduce ratings by up to 15%.

Ratings are mechanical not thermal.

Flanged Reducer Assemblies and Mounting Positions

A

Assemblies - F/QC/RF 700 Series

Standard assemblies define output shaft (slow speed) projection with respect to input shaft (high speed) and mounting surface.

Types “A” and “B” are horizontal bases.

Types “C” and “E” are vertical high bases and Types “D” and “F” are vertical low bases. Types “X” is input vertical up.

Basic models and separate base kits are supplied unless otherwise specified. Assembly “H” is available at a slight additional charge.

See Pages 14-15 for complete ordering instructions.

Input may rotate clockwise or counter clockwise.

FOR OTHER CONFIGURATIONS NOT SHOWN, CONTACT FACTORY.

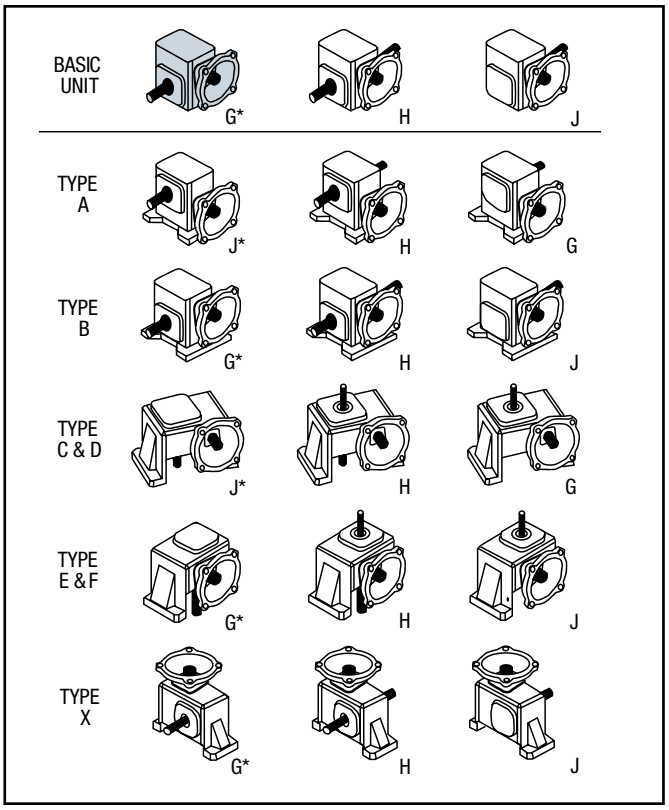

* Standard assemblies

Mounting Positions - F/QC/RF - SF - HF/HQC 700 Series

Standard assemblies are for Position 1. The design permits any types of assembly to be mounted in any position shown by the proper location of the vented oil filler, level and drain plugs, at the time of installation.

For other than Position 1, order standard and relocate vented oil filler, level and drain plugs.

For production orders Boston Gear will assemble units for the specified mounting position desired at no additional charge.

CAUTION
When ordering speed reducers pre-lubricated, the Mounting Position must be indicated to ensure proper oil level and seal configuration.

MOTOR HORIZONTAL

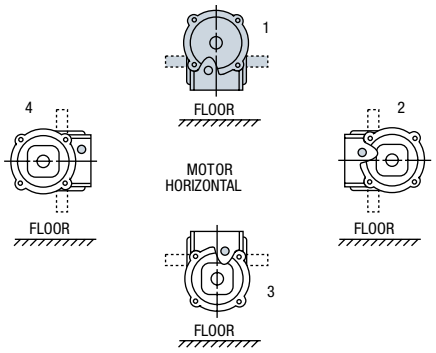

MOTOR VERTICAL

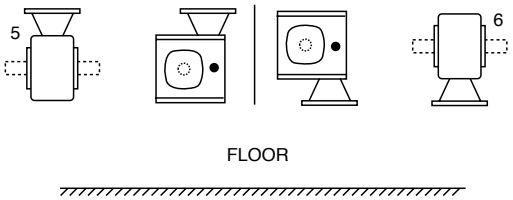

- Indicates proper oil level.
- When mounting gearboxes in positions 2, 3, 4, 6 Double Input Seals are required.

Non-Flanged Reducer Assemblies and Mounting Positions

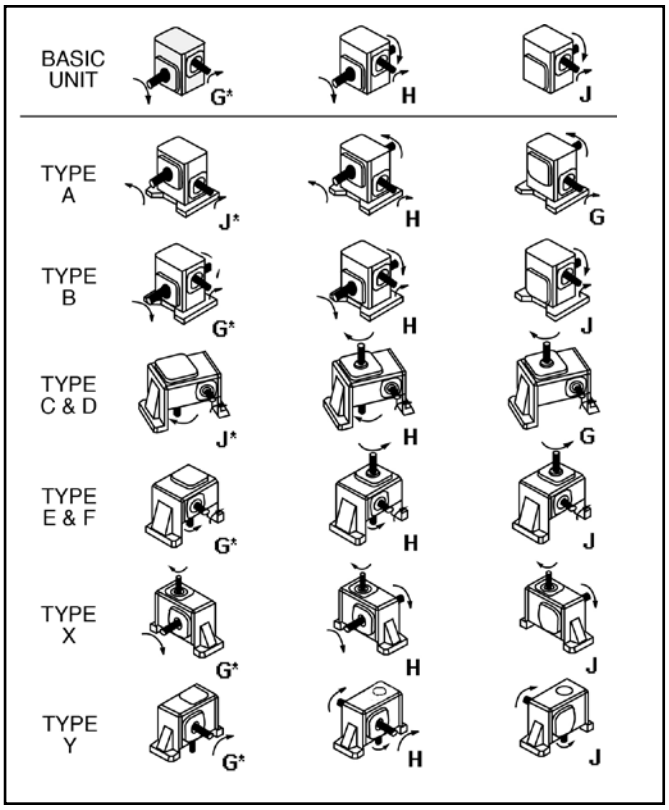

* Standard assemblies

Assemblies - 700 Series

Standard assemblies define output shaft (slow speed) projection with respect to input shaft (high speed) projection and mounting surface.

Types “A” and “B” are horizontal bases.

Types “C” and “E” are vertical high bases and Types “D” and “F” are vertical low bases. Type “X” is input vertical up. Type “Y” is input vertical down.

Basic models and separate base kits are supplied unless otherwise specified. Assembly “H” is available at a slight additional charge.

See Pages 14-15 for complete ordering instructions.

Input may rotate clockwise or counter clockwise. Arrows indicate relative rotation.

FOR OTHER CONFIGURATIONS NOT SHOWN, CONTACT FACTORY.

TYPICAL MOUNTING POSITIONS
(Examples shown for single-reduction models only)

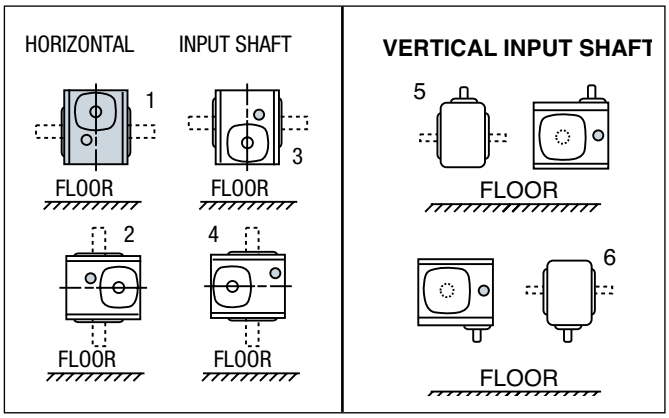

- Indicates proper oil level.
- When mounting gearboxes in positions 2, 3, 4, 6 Double Input Seals are required.

Example: F715-15**T**-B5-G6

Mounting Positions - 700 - S700 - H700 Series

Standard assemblies are for Position 1. The design permits any types of assembly to be mounted in any position shown by the proper location of the vented oil filler, level and drain plugs, at the time of installation.

For other than Position 1, order standard and relocate vented oil filler, level and drain plugs.

For production orders Boston Gear will assemble units for the specified mounting position desired at no additional charge.

CAUTION
When ordering speed reducers pre-lubricated, the Mounting Position must be indicated to ensure proper oil level and seal configuration.

Recommended Lubricants & Capacities

A

The following table indicates the types and viscosity of lubricants suitable for reducers operating at various temperatures.

Lubrication and maintenance instructions are provided with each speed reducer. These instructions should be followed for best results. It is important that the correct types of oil be used since many oils are not suitable for the lubrication of gears. Various types of gearing require different types of lubricants.

The lubricant must remain free from oxidation and contamination by water or debris, since only a very thin film of oil stands between efficient operation and failure. To assure long service life, the reducer should be periodically drained (preferably while warm) and refilled to the proper level with a recommended gear oil.

Under normal environmental conditions oil changes are suggested after the initial 250 hours of operation and thereafter at regular intervals of 2500 hours or every 6 months.

Synthetic lubricants will allow extended lubrication intervals due to its increased resistance to thermal and oxidation degradation. It is suggested that the initial oil change be made at 1500 hours and, thereafter, at 5000 hour intervals.

During the initial period of operation, higher than normal operating temperatures may be seen. This is due to the initial break-in of the gear set. The temperature of Single Reduction Worm Gear Reducers may reach approximately 225°F.

Enclosed Worm Gear Reducers

Ambient (Room) Temperature	Recommended Oil (or equivalent)	Viscosity Range SUS @ 100°F	Oil Type	ISO Viscosity Grade No.+
–20° to 225°F** (–29° to 107°C)	Klubersynth* UH1 6-460 Synthetic	1950/2500	PAG	460
–30° to 225°F (–34° to 107°C)	Mobil SHC634 Synthetic	1950/2500	PAO	320/460

Worm Gear Lubricant Available From Boston Gear

Type	Klubersynth UH1 6-460	Mobil SHC634
Size	Qt.	Qt.
Item Code	65159	51493

Available in quarts only

CAUTION: Relubricate more frequently if drive is operated in high ambient temperatures or unusually contaminated atmosphere. High loads and operating temperatures will also require the use of frequent lubrication.

* Synthetic recommendation is Klubersynth UH1 6-460, other lubrications may reduce efficiency and torque capacity.

\+ Other lubricants corresponding to AGMA/ISO numbers are available from all major oil companies. See Page 134 for lubricant interchange.

** The Klubersynth UH1 6-460 lubricant will perform at temperatures considerably higher than 225°F. However, the factory should always be consulted prior to operating at higher temperatures, as damage may occur to oil seals and other components.

WARNING: Different oil types should not be mixed. For example Klubersynth UH1 6-460 is not compatible with Mobil SHC634.

FOR SINGLE REDUCTION ONLY: REFER TO LUBRICATION AND INSTALLATION INSTRUCTIONS.

Oil Levels for Typical Mounting Positions (Examples shown for single-reduction models only)

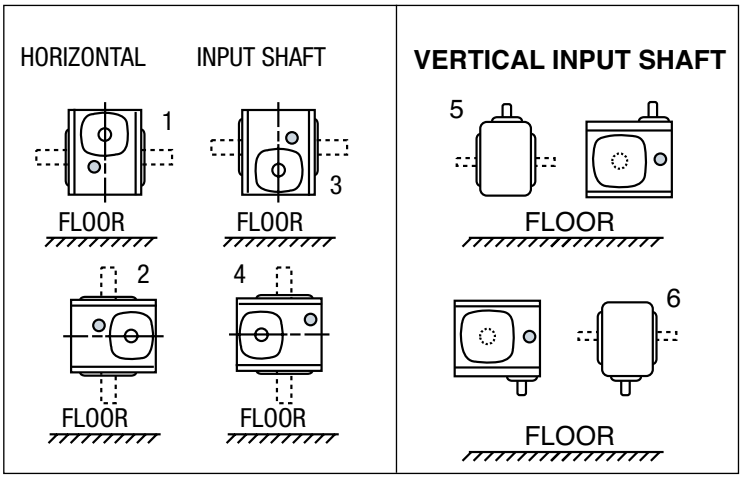

- Indicates proper oil level.
- When mounting gearboxes in positions 2, 3, 4, 6 Double Input Seals are required.

Oil capacity in fluid ounces for cast iron units*

Unit Size	Positions				
	1	2	3	4	5 & 6
710	2.2	3.3	3.3	3.3	3.3
713	5.5	7.0	7.0	7.0	7.0
715	10.0	15.0	15.0	13.5	13.5
718	12.0	16.0	18.5	16.0	16.0
721	15.0	20.5	20.5	19.0	19.0
724	18.0	24.5	28.5	24.5	24.5
726	28.0	36.0	43.0	36.0	36.0
730	43.0	60.0	66.0	58.0	58.0
732	58.0	84.0	90.0	80.0	80.0
738	85.0	120.0	130.0	120.0	107.0
752	204.0	240.0	245.0	240.0	215.0
760	330.0	400.0	415.0	400.0	370.0

*See page 56 for stainless steel units.

Quick Reference Model Selection Chart

Class I Service

Single Reduction (1.0 Service Factor)

Reducer Ratio	Output RPM	Input Horsepower @ 1750 rpm													
		1/6	1/4	1/3	1/2	3/4	1	1-1/2	2	3	5	7-1/2	10	15	20
5	350	710	710	710	710	713	715	715	718	724	726	—	—	—	—
10	175	710	710	710	713	713	715	718	721	724	730	738	738F	752	752F
15	117	710	710	710	713	715	718	721	724	726	732F	738F	752	752F	760F
20	88	710	710	713	713	715	718	724	726	730	738	752	752	760F	—
25	70	713	713	713	715	718	721	724	726	732	—	—	—	—	—
30	58	710	713	713	715	721	721	726	730	732F	752	752F	760F	—	—
40	44	710	713	715	718	721	724	730	732	738F	752	760	—	—	—
50	35	710	713	713	721	724	726	730	732F	752	752F	760F	—	—	—
60	29	710	715	718	721	724	730	732	738F	752	752F	—	—	—	—

NOTE: This chart is meant only as a guide. For actual ratings, see Pages 20-33.

Class II Service

Single Reduction (1.25 Service Factor)

Reducer Ratio	Output RPM	Input Horsepower @ 1750 rpm													
		1/6	1/4	1/3	1/2	3/4	1	1-1/2	2	3	5	7-1/2	10	15	20
5	350	710	710	710	710	713	715	718	718	724	730	—	—	—	—
10	175	710	710	710	713	715	718	721	724	726	732	738F	752	752F	760F
15	117	710	710	713	713	718	721	724	726	730	738	752	752	760	—
20	88	710	713	713	715	718	721	726	730	732	752	752F	760	—	—
25	70	713	713	713	718	721	724	726	730	732F	—	—	—	—	—
30	58	713	713	715	718	721	724	730	732	738F	752	760	—	—	—
40	44	713	713	715	721	724	726	732	732F	752	752F	760F	—	—	—
50	35	713	715	718	721	726	730	732F	738F	752	760F	—	—	—	—
60	29	713	718	721	724	730	732	738	752	752F	—	—	—	—	—

NOTE: This chart is meant only as a guide. For actual ratings, see Pages 20-33.

Class III Service

Single Reduction (1.75 Service Factor)

Reducer Ratio	Output RPM	Input Horsepower @ 1750 rpm													
		1/6	1/4	1/3	1/2	3/4	1	1-1/2	2	3	5	7-1/2	10	15	20
5	350	710	710	710	713	715	718	721	721	726	—	—	—	—	—
10	175	710	710	713	715	718	721	724	726	730	738F	752	752F	—	—
15	117	710	713	713	718	721	724	726	730	732F	752	752F	760	—	—
20	88	713	713	715	718	721	724	730	732	738F	752	760	760F	—	—
25	70	713	715	718	721	724	726	730	732F	—	—	—	—	—	—
30	58	713	715	718	721	724	730	732	738	752	752F	—	—	—	—
40	44	713	718	721	724	726	732	732F	752	752F	760F	—	—	—	—
50	35	715	718	721	726	730	732F	738F	752	760	—	—	—	—	—
60	29	718	721	724	726	732	732F	752	752	—	—	—	—	—	—

NOTE: This chart is meant only as a guide. For actual ratings, see Pages 20-33.

700 Series Single Reduction Output RPM & Capacity Selection Tables

@ 1750 RPM Input

For Ratings at Other Speeds, See Tables on Pages 30-33

A

Output RPM	Ratio	Non-Flanged Reducers					Flanged Reducers (Gearmotor)										Bore Code	Motors* 230/460 VAC 3 Phase 60 Hz
		Gear Capacity			Efficiency	Size	Ratings			Available Styles†								
		Output Torque (lb.in.)	HP				Motor HP	Output Torque (lb.in.)	Service Class	F	QC	FAN	HF	SF	HQC	RF	SS	
			Input	Output														
350	5	113	0.69	0.63	0.91	**710-5**	**0.50** **0.33** **0.33** **0.25** **0.25** **0.17** **0.17**	82 55 55 41 41 27 27	II III III III III III III									B5 B4 B5 B4 B5 B4 B5	FUTF AEUTF EUTF ADUTF DUTF ACUT CUTF
		235	1.39	1.31	0.94	**713-5**	**1** **0.75** **0.50**	169 127 85	II III III									B5 B5 B5	HUTF-5/8 GUTF FUTF
		291	1.72	1.62	0.94	**715-5**	**1.5** **1** **0.75**	254 169 127	I II III									B7 B5 B5	JUTF HUTF-5/8 GUTF
		432	2.55	2.40	0.94	**718-5**	**2** **1.5** **1**	338 254 169	II II III									B7 B7 B5	KUTF JUTF HUTF-5/8
		620	3.66	3.44	0.94	**721-5**	**2** **1.5**	338 254	II III									B7 B7	KUTF JUTF
		838	4.95	4.65	0.94	**724-5**	**5** **3**	838 508	I II									B9 B9	MUTF LUTF
		1034	6.11	5.74	0.94	**726-5**	**5** **3**	846 508	I III									B9 B9	MUTF LUTF
		1408	8.32	7.82	0.94	**730-5**	**5** **3**	846 508	II III									B9 B9	MUTF LUTF
250	7	644	2.80	2.56	0.91	**721-7**	**2** **1.5**	460 345	II III									B7 B7	KUTF JUTF
175	10	138	0.44	0.38	0.87	**710-10**	**0.33** **0.33** **0.25** **0.25**	104 104 78 78	II II III III									B4 B5 B4 B5	AEUTF EUTF ADUTF DUTF
		281	0.86	0.78	0.91	**713-10**	**0.75** **0.50** **0.33**	245 163 109	I II III									B5 B5 B5	GUTF FUTF EUTF
		397	1.20	1.10	0.92	**715-10**	**1** **0.75** **0.50**	330 248 165	I II III									B5 B5 B5	HUTF-5/8 GUTF FUTF
		536	1.61	1.49	0.92	**718-10**	**1.5** **1** **0.75**	499 333 249	I II III									B7 B5 B5	JUTF HUTF-5/8 GUTF
		789	2.34	2.19	0.94	**721-10**	**2** **1.5** **1**	674 505 337	I II III									B7 B7 B5	KUTF JUTF HUTF-5/8
		1069	3.18	2.97	0.93	**724-10**	**3** **2** **1.5**	1008 672 504	I II III									B9 B7 B7	LUT KUTF JUTF
		1345	3.94	3.74	0.95	**726-10**	**3** **2** **1.5**	1024 683 512	II III III									B9 B7 B7	LUTF KUTF JUTF

* Totally Enclosed, Fan Cooled. For complete motor Catalog Numbers and additional motors, see Pages 343 and 348.
† Shaded areas denote which styles are available for a given center distance and ratio. See Pages 14-15 for style descriptions.
752 & 760 SIZES AVAILABLE ONLY IN RF-FLANGED COUPLING TYPES.
RATINGS SHOWN REFLECT THE USE OF KLUBERSYNTH UH1 6-460.

700 Series Single Reduction Output RPM & Capacity Selection Tables

@ 1750 RPM Input

For Ratings at Other Speeds, See Tables on Pages 30-33

Output RPM	Ratio	Non-Flanged Reducers					Flanged Reducers (Gearmotor)											Bore Code	Motors* 230/460 VAC 3 Phase 60 Hz
		Gear Capacity			Efficiency	Size	Ratings			Available Styles†									
		Output Torque (lb.in.)	HP				Motor HP	Output Torque (lb.in.)	Service Class	F	QC	FAN	HF	SF	HQC	RF	SS		
			Input	Output															
175	10	1787	5.28	4.96	0.94	**730-10**	**5** **3** **2**	1692 1015 677	I III III									B9 B9 B7	MUTF LUTF KUTF
		2106	6.22	5.85	0.94	**732-10**	**5** **3**	1692 1015	II III									B9 B9	MUTF LUTF
		2532	7.75	7.03	0.91	**732-10F**	**5** **3**	1633 980	II III									B9 B9	MUTF LUTF
		2834	8.37	7.87	0.94	**738-10**	**7.5** **5** **3**	2538 1692 1015	I II III									B11 B9 B9	NUTF MUTF LUTF
		3221	9.96	8.94	0.90	**738-10F**	**10** **7.5** **5**	3221 2425 1616	I II III									B11 B11 B9	PUTF NUTF LUTF
		5860	17.31	16.27	0.94	**752-10**	**15** **10** **7.5**	5076 3384 2538	I II III									B13 B11 B11	RUTF PUTF SUTF
		7182	21.63	19.94	0.92	**752-10F**	**20** **15** **10**	6640 4979 3319	I II III									B13 B13 B11	SUTF RUTF PUTF
		8067	23.83	22.4	0.94	**760-10**	**20** **15** **10**	6768 5076 3384	I II III									B13 B13 B11	SUTF RUTF PUTF
		8658	26.13	24.04	0.92	**760-10F**	**20** **15**	6624 4968	II III									B13 B13	SUTF RUTF
145.8	12	693	1.76	1.60	0.91	**721-12**	**1.5** **1**	590 394	I III									B7 B7	JUTF HUTF
		984	2.50	2.28	0.91	**724-12**	**2** **1.5** **1**	787 590 394	II II III									B7 B7 B5	KUTF JUTF HUTF-5/8
116.7	15	146	0.33	0.27	0.82	**710-15**	**0.33** **0.33** **0.25** **0.25** **0.17** **0.17**	146 146 111 111 74 74	I I II II III III									B4 B5 B4 B5 B4 B5	AEUTF EUTF ADUTF DUTF ACUT CUTF
		305	0.66	0.56	0.86	**713-15**	**0.50** **0.33**	231 154	II III									B5 B5	FUTF EUTF
		429	0.91	0.79	0.87	**715-15**	**0.75** **0.50** **0.33**	353 235 157	I II III									B5 B5 B5	GUTF FUTF EUTF
		552	1.13	1.02	0.90	**718-15**	**1** **0.75** **0.50**	489 367 244	I II III									B5 B5 B5	HUTF-5/8 GUTF FUTF
		841	1.72	1.56	0.90	**721-15**	**1.5** **1** **0.75**	733 489 367	I II III									B7 B7 B5	JUTF HUTF GUTF

* Totally Enclosed, Fan Cooled. For complete motor Catalog Numbers and additional motors, see Pages 343 and 348.
† Shaded areas denote which styles are available for a given center distance and ratio. See Pages 14-15 for style descriptions.
752 & 760 SIZES AVAILABLE ONLY IN RF-FLANGED COUPLING TYPES.
RATINGS SHOWN REFLECT THE USE OF KLUBERSYNTH UH1 6-460.

700 Series Single Reduction Output RPM & Capacity Selection Tables

@ 1750 RPM Input

For Ratings at Other Speeds, See Tables on Pages 30-33

Output RPM	Ratio	Non-Flanged Reducers					Flanged Reducers (Gearmotor)										Bore Code	Motors* 230/460 VAC 3 Phase 60 Hz
		Gear Capacity			Efficiency	Size	Ratings			Available Styles†								
		Output Torque (lb.in.)	HP				Motor HP	Output Torque (lb.in.)	Service Class	F	QC	FAN	HF	SF	HQC	RF	SS	
			Input	Output														
116.7	15	1159	2.34	2.15	0.92	**724-15**	**2** **1.5** **1**	990 743 495	I II III									B7 B7 B7	KUTF JUTF HUTF
		1466	2.95	2.71	0.92	**726-15**	**3** **2** **1.5**	1466 994 745	I II III									B9 B7 B7	LUTF KUTF JUTF
		1969	3.97	3.64	0.92	**730-15**	**3** **2**	1487 991	II III									B9 B7	LUTF KUTF
		2344	4.65	4.34	0.93	**732-15**	**3** **2**	1511 1008	II III									B9 B7	LUTF KUTF
		2782	5.80	5.15	0.89	**732-15F**	**5** **3**	2519 1511	I III									B9 B9	MUTF LUTF
		3155	6.28	5.84	0.93	**738-15**	**5** **3**	2511 1507	II III									B9 B9	MUTF LUTF
		3543	7.47	6.56	0.88	**738-15F**	**7.5** **5** **3**	3556 2371 1422	I II III									B11 B9 B9	NUTF MUTF LUTF
		6618	13.06	12.25	0.94	**752-15**	**10** **7.5** **5**	5065 3799 2533	II II III									B11 B11 B9	PUTF NUTF MUTF
		7829	16.32	14.49	0.89	**752-15F**	**15** **10** **7.5**	7193 4795 3596	I II III									B13 B11 B11	RUTF PUTF NUTF
		9055	17.87	16.76	0.94	**760-15**	**15** **10**	7598 5065	I III									B13 B11	RUTF PUTF
		10712	22.33	19.83	0.89	**760-15F**	**20** **15** **10**	9590 7193 4795	I II III									B13 B13 B11	SUTF RUTF PUTF
87.5	20	149	0.27	0.21	0.77	**710-20**	**0.25** **0.25** **0.17** **0.17**	138 138 92 92	I I II II									B4 B5 B4 B5	ADUTF DUTF ACUT CUTF
		308	0.52	0.43	0.82	**713-20**	**0.50** **0.33** **0.25**	296 197 148	I II III									B5 B5 B5	FUTF EUTF DUTF
		435	0.72	0.60	0.84	**715-20**	**0.75** **0.50** **0.33**	435 302 201	I II III									B5 B5 B5	GUTF FUTF EUTF
		590	0.97	0.82	0.84	**718-20**	**1** **0.75** **0.50**	590 456 304	I II III									B5 B5 B5	HUTF-5/8 GUTF FUTF
		892	1.40	1.24	0.88	**721-20**	**1** **0.75**	637 478	II III									B5 B5	HUTF-5/8 GUTF
		1233	1.95	1.71	0.88	**724-20**	**2** **1.5** **1**	1233 948 632	I II III									B7 B7 B5	KUTF JUTF HUTF-5/8

* Totally Enclosed, Fan Cooled. For complete motor Catalog Numbers and additional motors, see Pages 343 and 348.

† Shaded areas denote which styles are available for a given center distance and ratio. See Pages 14-15 for style descriptions.

752 & 760 SIZES AVAILABLE ONLY IN RF-FLANGED COUPLING TYPES.

RATINGS SHOWN REFLECT THE USE OF KLUBERSYNTH UH1 6-460.

700 Series Single Reduction Output RPM & Capacity Selection Tables

@ 1750 RPM Input

For Ratings at Other Speeds, See Tables on Pages 30-33

A

Output RPM	Ratio	Non-Flanged Reducers					Flanged Reducers (Gearmotor)											Bore Code	Motors* 230/460 VAC 3 Phase 60 Hz
		Gear Capacity			Efficiency	Size	Ratings			Available Styles†									
		Output Torque (lb.in.)	HP				Motor HP	Output Torque (lb.in.)	Service Class	F	QC	FAN	HF	SF	HQC	RF	SS		
			Input	Output															
87.5	20	1483	2.34	2.06	0.88	**726-20**	**2** **1.5** **1**	1267 950 634	I II III									B7 B7 B5	KUTF JUTF HUTF-5/8
		2024	3.14	2.81	0.89	**730-20**	**3** **2** **1.5**	1933 1289 967	I II III									B9 B7 B7	LUTF KUTF JUTF
		2413	3.71	3.35	0.90	**732-20**	**3** **2**	1950 1300	II III									B9 B7	LUTF KUTF
		2858	4.63	3.97	0.86	**732-20F**	**3** **2**	1851 1234	II III									B9 B7	LUTF KUTF
		3285	5.00	4.56	0.91	**738-20**	**5** **3** **2**	3283 1970 1313	I II III									B9 B9 B7	MUTF LUTF KUTF
		3707	5.95	5.15	0.86	**738-20F**	**5** **3**	3114 1868	I III									B9 B9	MUTF LUTF
		6833	10.19	9.49	0.93	**752-20**	**10** **7.5** **5**	6703 5027 3352	I II III									B11 B11 B9	PUTF NUTF MUTF
		8075	12.74	11.21	0.88	**752-20F**	**10** **7.5** **5**	6336 4752 3168	II II III									B11 B11 B9	PUTF NUTF MUTF
		9412	14.02	13.07	0.93	**760-20**	**10** **7.5**	6710 5033	II III									B11 B11	PUTF NUTF
		11080	17.52	15.38	0.88	**760-20F**	**15** **10**	9482 6322	I III									B13 B11	RUTF PUTF
70	25	307	0.43	0.34	0.79	**713-25**	**0.33** **0.25** **0.17**	238 178 119	II II III									B5 B5 B5	EUTF DUTF CUTF
		437	0.60	0.49	0.81	**715-25**	**0.50** **0.33** **0.25**	364 243 182	I II III									B5 B5 B5	FUTF EUTF DUTF
		574	0.76	0.64	0.84	**718-25**	**0.75** **0.50** **0.33**	566 378 252	I II III									B5 B5 B5	GUTF FUTF EUTF
		875	1.16	0.97	0.84	**721-25**	**1** **0.75** **0.50**	754 566 377	I II III									B5 B5 B5	HUTF-5/8 GUTF FUTF
		1199	1.55	1.33	0.86	**724-25**	**1.5** **1** **0.75**	1160 773 580	I II III									B7 B5 B5	JUTF HUTF-5/8 GUTF
		1514	1.94	1.68	0.87	**726-25**	**2** **1.5** **1**	1514 1170 780	I II III									B7 B7 B7	KUTF JUTF HUTF-5/8
		2051	2.61	2.28	0.87	**730-25**	**2** **1.5**	1571 1179	II III									B7 B7	KUTF JUTF

* Totally Enclosed, Fan Cooled. For complete motor Catalog Numbers and additional motors, see Pages 343 and 348.
† Shaded areas denote which styles are available for a given center distance and ratio. See Pages 14-15 for style descriptions.
752 & 760 SIZES AVAILABLE ONLY IN RF-FLANGED COUPLING TYPES.
RATINGS SHOWN REFLECT THE USE OF KLUBERSYNTH UH1 6-460.

700 Series Single Reduction Output RPM & Capacity Selection Tables

@ 1750 RPM Input

For Ratings at Other Speeds, See Tables on Pages 30-33

A

Output RPM	Ratio	Non-Flanged Reducers					Flanged Reducers (Gearmotor)										Bore Code	Motors* 230/460 VAC 3 Phase 60 Hz
		Gear Capacity			Efficiency	Size	Ratings			Available Styles†								
		Output Torque (lb.in.)	HP Input	HP Output			Motor HP	Output Torque (lb.in.)	Service Class	F	QC	FAN	HF	SF	HQC	RF	SS	
70	25	2443	3.08	2.71	0.88	**732-25**	**3** **2** **1.5**	2379 1586 1189	I II III									B9 B7 B7	LUTF KUTF JUTF
		2891	3.85	3.21	0.84	**732-25F**	**3** **2**	2252 1501	II III									B9 B7	LUTF KUTF
58.3	30	150	0.20	0.14	0.69	**710-30**	**0.17** **0.17**	125 125	I I									B4 B5	ACUT CUTF
		311	0.39	0.29	0.74	**713-30**	**0.33** **0.25** **0.17**	265 199 133	I II III									B5 B5 B5	EUTF DUTF CUTF
		445	0.54	0.41	0.76	**715-30**	**0.50** **0.33** **0.25**	411 274 206	I II III									B5 B5 B5	FUTF EUTF DUTF
		573	0.65	0.53	0.82	**718-30**	**0.50** **0.33** **0.25**	441 294 220	II III III									B5 B5 B5	FUTF EUTF DUTF
		871	0.99	0.81	0.81	**721-30**	**1** **0.75** **0.50**	871 659 440	I II III									B5 B5 B5	HUTF-5/8 GUTF FUTF
		1200	1.33	1.11	0.83	**724-30**	**1** **0.75**	902 676	II III									B5 B5	HUTF-5/8 GUTF
		1521	1.68	1.41	0.84	**726-30**	**1.5** **1** **0.75**	1358 905 679	I II III									B7 B5 B5	JUTF HUTF-5/8 GUTF
		2045	2.27	1.89	0.83	**730-30**	**2** **1.5** **1**	1801 1351 901	I II III									B7 B7 B5	KUTF JUTF HUTF-5/8
		2456	2.64	2.27	0.86	**732-30**	**2** **1.5**	1860 1395	II III									B7 B7	KUTF JUTF
		2902	3.30	2.69	0.81	**732-30F**	**3** **2** **1.5**	2637 1758 1319	I II III									B9 B7 B7	LUTF KUTF JUTF
		3354	3.56	3.10	0.87	**738-30**	**3** **2**	2825 1884	I III									B9 B7	LUTF KUTF
		3757	4.23	3.48	0.82	**738-30F**	**3** **2**	2663 1776	II III									B9 B7	LUTF KUTF
		6964	7.30	6.45	0.88	**752-30**	**5** **3**	4768 2861	II III									B9 B9	PUTF NUTF
		8336	9.12	7.72	0.85	**752-30F**	**7.5** **5**	6853 4568	I III									B11 B9	NUTF MUTF
		9603	9.81	8.89	0.91	**760-30**	**7.5** **5**	7339 4892	II III									B11 B9	NUTF MUTF
		11219	12.26	10.38	0.85	**760-30F**	**10** **7.5** **5**	9148 6861 4574	I II III									B11 B11 B9	PUTF NUTF MUTF
43.8	40	151	0.17	0.10	0.62	**710-40**	**0.17** **0.17**	148 148	I I									B4 B5	ACUT CUTF

* Totally Enclosed, Fan Cooled. For complete motor Catalog Numbers and additional motors, see Pages 343 and 348.
† Shaded areas denote which styles are available for a given center distance and ratio. See Pages 14-15 for style descriptions.
752 & 760 SIZES AVAILABLE ONLY IN RF-FLANGED COUPLING TYPES.
RATINGS SHOWN REFLECT THE USE OF KLUBERSYNTH UH1 6-460.

700 Series Single Reduction Output RPM & Capacity Selection Tables

@ 1750 RPM Input

For Ratings at Other Speeds, See Tables on Pages 30-33

Output RPM	Ratio	Non-Flanged Reducers					Flanged Reducers (Gearmotor)										Bore Code	Motors* 230/460 VAC 3 Phase 60 Hz
		Gear Capacity			Efficiency	Size	Ratings			Available Styles†								
		Output Torque (lb.in.)	HP				Motor HP	Output Torque (lb.in.)	Service Class	F	QC	FAN	HF	SF	HQC	RF	SS	
			Input	Output														
43.8	40	307	0.31	0.21	0.69	**713-40**	**0.25** **0.17**	248 165	II III									B5 B5	DUTF CUTF
		442	0.43	0.31	0.71	**715-40**	**0.33** **0.25** **0.17**	342 257 171	II II III									B5 B5 B5	EUTF DUTF CUTF
		609	0.57	0.42	0.74	**718-40**	**0.50** **0.33** **0.25**	534 356 267	I II III									B5 B5 B5	FUTF EUTF DUTF
		876	0.81	0.61	0.75	**721-40**	**0.75** **0.50** **0.33**	811 541 360	I II III									B5 B5 B5	GUTF FUTF EUTF
		1206	1.08	0.84	0.77	**724-40**	**1** **0.75** **0.50**	1116 837 558	I II III									B5 B5 B5	HUTF-5/8 GUTF FUTF
		1512	1.33	1.05	0.79	**726-40**	**1** **0.75**	1136 852	II III									B5 B5	HUTF-5/8 GUTF
		2041	1.78	1.42	0.80	**730-40**	**1.5** **1** **0.75**	1719 1146 860	I II III									B7 B5 B5	JUTF HUTF-5/8 GUTF
		2444	2.10	1.70	0.81	**732-40**	**2** **1.5** **1**	2327 1745 1164	I II III									B7 B7 B5	KUTF JUTF HUTF-5/8
		2944	2.62	2.04	0.78	**732-40F**	**2** **1.5**	2246 1685	II III									B7 B7	KUTF JUTF
		3320	2.80	2.30	0.82	**738-40**	**2** **1.5**	2370 1778	II III									B7 B7	KUTF JUTF
		3747	3.33	2.60	0.78	**738-40F**	**3** **2**	3374 2249	I II									B9 B7	LUTF KUTF
		6889	5.60	4.78	0.85	**752-40**	**5** **3**	6149 3689	I III									B9 B9	MUTF LUTF
		8178	7.00	5.68	0.81	**752-40F**	**5** **3**	5839 3504	II III									B9 B9	MUTF LUTF
		9566	7.65	6.64	0.87	**760-40**	**7.5** **5**	9374 6250	I II									B11 B9	NUTF MUTF
		11197	9.56	7.77	0.81	**760-40F**	**7.5** **5**	8780 5854	II III									B11 B9	NUTF MUTF
35	50	153	0.15	0.09	0.57	**710-50**	**0.17** **0.17**	153 153	I I									B4 B5	ACUT CUTF
		297	0.25	0.17	0.66	**713-50**	**0.25** **0.17**	297 198	I II									B5 B5	DUTF CUTF
		429	0.35	0.24	0.68	**715-50**	**0.33** **0.25** **0.17**	409 306 204	I II III									B5 B5 B5	EUTF DUTF CUTF
		573	0.44	0.32	0.72	**718-50**	**0.33** **0.25**	434 325	II III									B5 B5	EUTF DUTF
		857	0.66	0.48	0.72	**721-50**	**0.50** **0.33**	649 433	II III									B5 B5	FUTF EUTF

* Totally Enclosed, Fan Cooled. For complete motor Catalog Numbers and additional motors, see Pages 343 and 348.
† Shaded areas denote which styles are available for a given center distance and ratio. See Pages 14-15 for style descriptions.
752 & 760 SIZES AVAILABLE ONLY IN RF-FLANGED COUPLING TYPES.
RATINGS SHOWN REFLECT THE USE OF KLUBERSYNTH UH1 6-460.

700 Series Single Reduction Output RPM & Capacity Selection Tables

@ 1750 RPM Input

For Ratings at Other Speeds, See Tables on Pages 30-33

A

Output RPM	Ratio	Non-Flanged Reducers					Flanged Reducers (Gearmotor)										Bore Code	Motors* 230/460 VAC 3 Phase 60 Hz
		Gear Capacity			Efficiency	Size	Ratings			Available Styles†								
		Output Torque (lb.in.)	HP Input	HP Output			Motor HP	Output Torque (lb.in.)	Service Class	F	QC	FAN	HF	SF	HQC	RF	SS	
35	50	1177	0.87	0.65	0.75	**724-50**	**0.75** **0.50** **0.33**	1014 676 451	I II III									B5 B5 B5	GUTF FUTF EUTF
		1484	1.08	0.82	0.76	**726-50**	**1** **0.75** **0.50**	1373 1030 687	I II III									B5 B5 B5	HUTF-5/8 GUTF FUTF
		2016	1.45	1.12	0.77	**730-50**	**1.5** **1** **0.75**	2016 1390 1042	I II III									B7 B5 B5	JUTF HUTF-5/8 GUTF
		2403	1.70	1.33	0.78	**732-50**	**1.5** **1** **0.75**	2120 1413 1060	I II III									B7 B5 B5	JUTF HUTF-5/8 GUTF
		2791	2.12	1.55	0.73	**732-50F**	**2** **1.5** **1**	2632 1974 1316	I II III									B7 B7 B7	KUTF JUTF HUTF
		3280	2.28	1.82	0.80	**738-50**	**2** **1.5** **1**	2876 2157 1438	I II III									B7 B7 B7	KUTF JUTF HUTF
		3626	2.71	2.01	0.74	**738-50F**	**2** **1.5**	2675 2006	II III									B9 B7	KUTF JUTF
		6751	4.49	3.75	0.83	**752-50**	**3**	4509	II									B9	LUTF
		7678	5.61	4.26	0.76	**752-50F**	**5** **3**	6840 4104	I III									B9 B9	MUTF LUTF
		9378	6.12	5.21	0.85	**760-50**	**5** **3**	7659 4595	I III									B9 B9	MUTF LUTF
		9836	7.65	5.46	0.71	**760-50F**	**7.5** **5** **3**	9639 6426 3856	I II III									B11 B9 B9	NUTF MUTF LUTF
29.2	60	144	0.12	0.07	0.55	**710-60**	**0.17** **0.17**	144 144	I I									B4 B5	ACUT CUTF
		271	0.22	0.13	0.57	**713-60**	**0.17**	201	II									B5	CUTF
		399	0.28	0.18	0.66	**715-60**	**0.25** **0.17**	356 238	I II									B5 B5	DUTF EUTF
		527	0.35	0.24	0.70	**718-60**	**0.33** **0.25** **0.17**	502 376 251	I II III									B5 B5 B5	EUTF DUTF CUTF
		826	0.55	0.38	0.69	**721-60**	**0.50** **0.33** **0.25**	751 500 375	I II III									B5 B5 B5	FUTF EUTF DUTF
		1128	0.73	0.52	0.71	**724-60**	**0.75** **0.50** **0.33**	1128 772 515	I II III									B5 B5 B5	GUTF FUTF EUTF
		1385	0.89	0.64	0.72	**726-60**	**0.75** **0.50**	1166 778	I III									B5 B5	GUTF FUTF

* Totally Enclosed, Fan Cooled. For complete motor Catalog Numbers and additional motors, see Pages 343 and 348.
† Shaded areas denote which styles are available for a given center distance and ratio. See Pages 14-15 for style descriptions.
752 & 760 SIZES AVAILABLE ONLY IN RF-FLANGED COUPLING TYPES.
RATINGS SHOWN REFLECT THE USE OF KLUBERSYNTH UH1 6-460.

700 Series Single Reduction Output RPM & Capacity Selection Tables

@ 1750 RPM Input

For Ratings at Other Speeds, See Tables on Pages 30-33

Output RPM	Ratio	Non-Flanged Reducers					Flanged Reducers (Gearmotor)											Bore Code	Motors* 230/460 VAC 3 Phase 60 Hz
		Gear Capacity			Efficiency	Size	Ratings			Available Styles†									
		Output Torque (lb.in.)	HP Input	HP Output			Motor HP	Output Torque (lb.in.)	Service Class	F	QC	FAN	HF	SF	HQC	RF	SS		
29.2	60	1921	1.20	0.89	0.74	**730-60**	**1** **0.75** **0.50**	1601 1200 800	I II III	■	■		■		■	■		B5 B5 B5	HUTF-5/8 GUTF FUTF
		2281	1.40	1.06	0.75	**732-60**	**1.5** **1** **0.75**	2281 1629 1221	I II III	■	■		■	■	■	■	■	B7 B7 B5	JUTF HUTF GUTF
		2549	1.75	1.18	0.67	**732-60F**	**1.5** **1**	2184 1446	I III	■	■	■	■	■	■	■		B7 B7	JUTF HUTF
		3128	1.88	1.45	0.77	**738-60**	**1.5** **1**	2495 1633	II III	■	■		■		■	■		B7 B7	JUTF HUTF
		3277	2.24	1.52	0.68	**738-60F**	**2** **1.5**	2925 2193	I II	■	■	■	■		■	■		B7 B7	KUTF JUTF
		6416	3.67	2.97	0.81	**752-60**	**3**	5242	I				■			■		B9	LUTF
		6953	4.59	3.22	0.70	**752-60F**	**5** **3**	6953 4542	I II			■	■			■		B9 B9	MUTF LUTF
		8934	5.03	4.13	0.82	**760-60**	**5** **3**	8878 5327	I II							■		B9 B9	MUTF LUTF
		9528	6.29	4.41	0.70	**760-60F**	**5**	7571	II			■				■		B9	MUTF
21.9	80	222	0.15	0.08	0.53	**713-80**	**0.17**	222	I	■	■		■		■	■	■	B5	CUTF
		318	0.21	0.11	0.53	**715-80**	**0.17**	259	II	■	■		■		■	■	■	B5	CUTF
		387	0.22	0.13	0.61	**718-80**	**0.25** **0.17**	387 298	I II	■	■		■	■	■	■	■	B5 B5	DUFT CUTF
		634	0.38	0.22	0.58	**721-80**	**0.33** **0.25**	551 418	I II	■	■		■	■	■	■	■	B5 B5	EUTF DUTF
		1069	0.57	0.37	0.65	**726-80**	**0.5** **0.33**	936 623	I III	■	■		■	■	■	■	■	B5 B5	FUTF EUTF
		1795	0.95	0.62	0.65	**732-80**	**1** **0.75** **0.5**	1795 1404 936	I II III	■	■	■	■	■	■	■	■	B5 B5 B5	HUTF-5/8 GUTF FUTF
17.5	100	138	0.08	0.04	0.47	**713-100**	**0.17**	138	I	■	■		■		■	■	■	B5	CUTF
		251	0.15	0.07	0.47	**715-100**	**0.17**	251	I	■	■		■		■	■	■	B5	CUTF
		323	0.17	0.09	0.53	**718-100**	**0.17**	323	I	■	■		■	■	■	■	■	B5	CUTF
		503	0.27	0.14	0.52	**721-100**	**0.25** **0.17**	468 318	I II	■	■		■	■	■	■	■	B5 B5	DUTF CUTF
		757	0.39	0.21	0.54	**726-100**	**0.33** **0.25** **0.17**	642 486 330	I II III	■	■		■	■	■	■	■	B5 B5 B5	EUTF DUTF CUTF
		1414	0.65	0.39	0.6	**732-100**	**0.5** **0.33**	1080 713	II III	■	■	■	■	■	■	■	■	B5 B5	FUTF EUTF

* Totally Enclosed, Fan Cooled. For complete motor Catalog Numbers and additional motors, see Pages 343 and 348.
† Shaded areas denote which styles are available for a given center distance and ratio. See Pages 14-15 for style descriptions.
752 & 760 SIZES AVAILABLE ONLY IN RF-FLANGED COUPLING TYPES.
RATINGS SHOWN REFLECT THE USE OF KLUBERSYNTH UH1 6-460.

700 Series Single Reduction Ratio & Capacity Selection Tables

Horsepower and Torque Capacities at Listed RPM Inputs (Service Factor 1.0)

A

Series Size			710			713			715			718		
				Output			Output			Output			Output	
Ratio	Input RPM	Output RPM	Input HP	HP	Torque (lb-in)	Input HP	HP	Torque (lb-in)	Input HP	HP	Torque (lb-in)	Input HP	HP	Torque (lb-in)
5	**1750**	350	0.69	0.63	113	1.39	1.31	235	1.72	1.62	291	2.55	2.40	432
	1150	230	0.40	0.36	98	0.84	0.73	200	1.15	1.04	285	1.42	1.28	350
	690	138	0.26	0.23	105	0.50	0.45	205	0.80	0.72	330	0.97	0.87	400
	100	20	0.044	0.036	115	0.091	0.076	240	0.14	0.12	370	0.17	0.14	460
10	**1750**	175	0.44	0.38	138	0.86	0.78	281	1.20	1.10	397	1.61	1.49	536
	1150	115	0.23	0.21	118	0.51	0.44	243	0.73	0.64	350	0.98	0.87	480
	690	69	0.16	0.14	128	0.33	0.29	266	0.47	0.42	384	0.66	0.58	534
	100	10	0.03	0.022	140	0.06	0.047	296	0.086	0.068	432	0.12	0.097	610
15	**1750**	116.7	0.33	0.27	146	0.66	0.58	305	0.91	0.79	428	1.13	1.02	552
	1150	77.7	0.17	0.15	125	0.37	0.32	262	0.53	0.46	376	0.67	0.57	472
	690	46	0.12	0.10	134	0.26	0.21	288	0.36	0.30	415	0.46	0.39	534
	100	6.7	0.023	0.016	147	0.049	0.034	322	0.07	0.05	468	0.086	0.063	597
20	**1750**	87.5	0.27	0.21	149	0.52	0.43	308	0.72	0.60	435	0.97	0.82	590
	1150	57.5	0.14	0.12	129	0.29	0.24	265	0.43	0.35	380	0.58	0.48	525
	690	34.5	0.091	0.074	136	0.19	0.16	286	0.28	0.23	420	0.38	0.32	580
	100	5.0	0.017	0.012	150	0.04	0.026	330	0.056	0.038	485	0.08	0.055	690
25	**1750**	70	—	—	—	0.43	0.34	307	0.60	0.49	437	0.76	0.64	574
	1150	46	—	—	—	0.24	0.19	260	0.35	0.27	375	0.48	0.36	500
	690	27.6	—	—	—	0.15	0.12	280	0.22	0.18	410	0.30	0.24	540
	100	4.0	—	—	—	0.031	0.02	310	0.043	0.028	451	0.063	0.042	660
30	**1750**	58.3	0.20	0.14	150	0.39	0.29	311	0.54	0.41	446	0.65	0.53	573
	1150	38.3	0.10	0.081	133	0.21	0.16	270	0.31	0.23	388	0.40	0.32	530
	690	23	0.068	0.051	140	0.14	0.11	300	0.20	0.17	460	0.29	0.22	600
	100	3.3	0.013	0.008	155	0.029	0.018	340	0.04	0.026	496	0.057	0.037	710
40	**1750**	43.8	0.17	0.10	151	0.31	0.21	307	0.43	0.31	441	0.57	0.42	609
	1150	28.8	0.081	0.059	129	0.18	0.12	265	0.24	0.17	380	0.33	0.24	525
	690	17.3	0.051	0.037	130	0.10	0.078	286	0.15	0.11	420	0.22	0.16	580
	100	2.5	0.011	0.006	150	0.025	0.013	330	0.036	0.019	485	0.052	0.027	690
50	**1750**	35	0.15	0.09	153	0.25	0.17	297	0.35	0.24	429	0.44	0.32	573
	1150	23	0.06	0.042	114	0.12	0.09	248	0.18	0.13	360	0.24	0.17	470
	690	13.8	0.041	0.029	130	0.083	0.058	265	0.12	0.085	390	0.17	0.12	520
	100	2.0	0.008	0.004	140	0.018	0.009	300	0.027	0.014	440	0.038	0.019	590
60	**1750**	29.2	0.12	0.07	144	0.22	0.13	271	0.28	0.18	399	0.35	0.24	527
	1150	19.2	0.065	0.032	105	0.171	0.093	201	0.164	0.095	312	0.21	0.13	440
	690	11.5	0.044	0.02	112	0.101	0.046	253	0.114	0.061	338	0.14	0.084	480
	100	1.7	0.008	0.003	121	0.021	0.007	285	0.022	0.009	371	0.03	0.014	530
80	**1750**	21.9	—	—	—	0.15	0.08	222	0.21	0.11	318	0.23	0.13	375
	1150	14.4	—	—	—	0.12	0.06	246	0.17	0.018	358	0.16	0.089	390
	690	8.6	—	—	—	0.09	0.04	266	0.12	0.15	392	0.10	0.048	350
	100	1.3	—	—	—	0.02	0.01	293	0.03	0.01	440	0.02	0.009	470
100	**1750**	17.5	—	—	—	0.08	0.04	138	0.15	0.07	251	0.17	0.09	323
	1150	11.5	—	—	—	0.07	0.028	152	0.12	0.05	283	0.14	0.07	360
	690	6.9	—	—	—	0.05	0.018	164	0.09	0.03	309	0.10	0.04	391
	100	1.0	—	—	—	0.01	0.003	180	0.02	0.01	347	0.020	0.01	435
Overhung Load*			**150 LBS.**			**200 LBS.**			**300 LBS.**			**500 LBS.**		
Output Shaft Thrust Load			**200 LBS.**			**300 LBS.**			**400 LBS.**			**500 LBS.**		

RATINGS SHOWN REFLECT MAXIMUM GEAR CAPACITY WITH KLUBERSYNTH UH1 6-460.

*Overhung Load is at centerline of output shaft projection and with NO THRUST Load.

Note: For input speeds above 1750 RPM. Do NOT exceed 1750 RPM input horsepower (See page 353).

700 Series Single Reduction Ratio & Capacity Selection Tables

Horsepower and Torque Capacities at Listed RPM Inputs (Service Factor 1.0)

Series Size			721			724			726			730		
				Output			Output			Output			Output	
Ratio	Input RPM	Output RPM	Input HP	HP	Torque (lb-in)	Input HP	HP	Torque (lb-in)	Input HP	HP	Torque (lb-in)	Input HP	HP	Torque (lb-in)
5	1750	350	3.66	3.44	620	4.94	4.65	838	6.11	5.74	1034	8.32	7.82	1408
	1150	230	2.33	2.10	575	3.05	2.74	750	4.05	3.64	1000	5.85	5.47	1500
	690	138	1.64	1.47	670	2.25	2.01	920	3.04	2.74	1250	5.25	4.83	2206
	100	20	0.30	0.26	820	0.43	0.38	1200	0.58	0.51	1600	1.06	0.91	2873
10	1750	175	2.34	2.19	789	3.18	2.97	1069	3.94	3.74	1345	5.28	4.96	1787
	1150	115	1.49	1.32	725	2.09	1.87	1025	2.82	2.54	1390	4.25	3.84	2107
	690	69	1.00	0.89	814	1.46	1.31	1200	1.97	1.75	1600	3.15	2.79	2548
	100	10	0.19	0.15	968	0.27	0.23	1430	0.37	0.31	1960	0.63	0.51	3234
15	1750	116.7	1.72	1.56	840	2.34	2.15	1159	2.95	2.71	1465	3.97	3.64	1969
	1150	77.7	1.06	0.91	752	1.51	1.29	1060	2.01	1.73	1425	3.41	2.95	2425
	690	46.0	0.72	0.61	832	1.05	0.90	1239	1.41	1.22	1675	2.55	2.14	2928
	100	6.7	0.13	0.10	968	0.19	0.15	1463	0.28	0.22	2057	0.51	0.38	3610
20	1750	87.5	1.40	1.24	892	1.95	1.71	1233	2.34	2.06	1483	3.14	2.81	2024
	1150	57.5	0.86	0.72	782	1.27	1.06	1160	1.63	1.36	1500	2.68	2.23	2470
	690	35.0	0.57	0.48	875	0.83	0.70	1280	1.11	0.94	1725	1.67	1.52	2739
	100	5.0	0.11	0.08	1018	0.17	0.12	1550	0.20	0.16	2050	0.41	0.38	3584
25	1750	70	1.16	0.97	875	1.55	1.33	1199	1.94	1.68	1514	2.61	2.28	2051
	1150	46	0.72	0.58	790	1.03	0.84	1150	1.31	1.11	1525	2.30	1.86	2560
	690	27.6	0.47	0.38	875	0.69	0.56	1280	0.93	0.77	1750	1.50	1.26	2830
	100	4.0	0.094	0.062	975	0.14	0.095	1500	0.18	0.13	2075	0.30	0.21	3400
30	1750	58.3	0.99	0.81	871	1.33	1.11	1200	1.68	1.41	1521	2.27	1.89	2045
	1150	38.3	0.62	0.48	795	0.89	0.70	1170	1.20	0.96	1575	1.99	1.53	2510
	690	23	0.41	0.32	880	0.60	0.47	1300	0.81	0.65	1790	1.51	1.09	3000
	100	3.3	0.086	0.055	1050	0.12	0.078	1500	0.16	0.11	2100	0.32	0.20	3702
40	1750	43.8	0.81	0.61	876	1.08	0.84	1206	1.33	1.05	1512	1.78	1.43	2041
	1150	28.8	0.49	0.36	785	0.70	0.53	1160	0.89	0.68	1500	1.46	1.14	2470
	690	17.3	0.33	0.24	875	0.46	0.35	1280	0.61	0.47	1725	0.99	0.78	2900
	100	2.5	0.074	0.04	1018	0.11	0.061	1550	0.14	0.081	2050	0.23	0.14	3600
50	1750	35	0.66	0.48	857	0.87	0.65	1177	1.08	0.82	1484	1.45	1.12	2016
	1150	23	0.38	0.27	750	0.56	0.40	1100	0.75	0.54	1482	1.20	0.87	2400
	690	13.8	0.26	0.18	840	0.37	0.26	1225	0.51	0.37	1675	0.87	0.61	2750
	100	2.0	0.057	0.031	970	0.084	0.045	1425	0.11	0.063	1975	0.19	0.10	3200
60	1750	29.2	0.55	0.38	826	0.73	0.52	1128	0.89	0.64	1385	1.20	0.89	1921
	1150	19.2	0.34	0.22	730	0.49	0.32	1040	0.64	0.42	1390	1.01	0.68	2285
	690	11.5	0.23	0.15	805	0.33	0.21	1154	0.44	0.29	1570	0.27	0.45	2580
	100	1.7	0.055	0.025	930	0.073	0.036	1330	0.10	0.05	1840	0.13	0.08	3080
80	1750	21.9	0.38	0.22	634	—	—	—	0.76	0.38	1100	—	—	—
	1150	14.4	0.31	0.17	734	—	—	—	0.47	0.29	1252	—	—	—
	690	8.6	0.23	0.11	819	—	—	—	0.35	0.18	1340	—	—	—
	100	1.3	0.05	0.02	942	—	—	—	0.07	0.03	1600	—	—	—
100	1750	17.5	0.27	0.14	503	—	—	—	0.39	0.21	757	—	—	—
	1150	11.5	0.22	0.11	580	—	—	—	0.34	0.17	913	—	—	—
	690	6.9	0.16	0.07	646	—	—	—	0.26	0.12	1054	—	—	—
	100	1.0	0.04	0.01	744	—	—	—	0.06	0.02	1267	—	—	—
Overhung Load*			700 LBS.			900 LBS.			1000 LBS.			1250 LBS.		
Output Shaft Thrust Load			700 LBS.			800 LBS.			900 LBS.			1000 LBS.		

RATINGS SHOWN REFLECT MAXIMUM GEAR CAPACITY WITH KLUBERSYNTH UH1 6-460.

*Overhung Load is at centerline of output shaft projection and with NO THRUST Load.

Note: For input speeds above 1750 RPM. Do NOT exceed 1750 RPM input horsepower (See page 353).

700 Series Single Reduction Ratio & Capacity Selection Tables

Horsepower and Torque Capacities at Listed RPM Inputs (Service Factor 1.0)

A

Series Size			732			732F			738			738F		
				Output			Output			Output			Output	
Ratio	Input RPM	Output RPM	Input HP	HP	Torque (lb-in)	Input HP	HP	Torque (lb-in)	Input HP	HP	Torque (lb-in)	Input HP	HP	Torque (lb-in)
5	1750	350	10.05	9.54	1716	—	—	—	—	—	—	—	—	—
	1150	230	8.43	7.91	2165	—	—	—	—	—	—	—	—	—
	690	138	6.53	6.02	2749	—	—	—	—	—	—	—	—	—
	100	20	1.38	1.19	3735	—	—	—	—	—	—	—	—	—
10	1750	175	6.22	5.85	2106	7.75	7.03	2532	8.37	7.87	2834	9.96	8.94	3221
	1150	115	4.41	3.92	2150	5.03	4.47	2450	6.19	5.56	3050	6.90	6.20	3400
	690	69	3.17	2.85	2600	3.40	3.06	2800	4.54	4.05	3700	4.79	4.27	3900
	100	10	0.62	0.52	3300	0.62	0.52	3300	0.87	0.47	4700	0.87	0.47	4700
15	1750	116.7	4.65	4.34	2344	5.80	5.15	2782	6.28	5.84	3154	7.47	6.56	3543
	1150	77.7	3.15	2.74	2250	3.63	3.16	2600	4.30	3.77	3100	4.99	4.38	3600
	690	46	2.35	2.04	2800	2.52	2.19	3000	3.25	2.85	3900	3.50	3.06	4200
	100	6.7	0.48	0.39	3700	0.48	0.39	3700	0.68	0.55	5200	0.68	0.55	5200
20	1750	87.5	3.71	3.35	2413	4.63	3.97	2858	5.00	4.56	3285	5.95	5.15	3707
	1150	57.5	2.77	2.37	2600	3.20	2.74	3000	4.10	3.56	3900	4.55	3.94	4325
	690	34.5	1.99	1.70	3100	2.15	1.83	3850	2.91	2.52	4600	3.10	2.68	4900
	100	5.0	0.41	0.30	3846	0.41	0.30	3846	0.61	0.46	5800	0.61	0.46	5800
25	1750	70	3.08	2.71	2443	3.85	3.21	2891	—	—	—	—	—	—
	1150	46	2.29	1.90	2600	2.65	2.19	3000	—	—	—	—	—	—
	690	27.6	1.51	1.27	2900	1.67	1.40	3200	—	—	—	—	—	—
	100	4.0	0.31	0.22	3500	0.31	0.22	3500	—	—	—	—	—	—
30	1750	58.3	2.64	2.27	2456	3.30	2.69	2902	3.56	3.10	3354	4.23	3.48	3757
	1150	38.3	2.8	2.23	2675	2.36	1.88	3100	2.87	2.37	3900	3.38	2.67	4400
	690	23	1.41	1.16	3200	1.55	1.28	3500	2.08	1.68	4600	2.22	1.79	4900
	100	3.3	0.30	0.21	4000	0.3	0.21	4000	0.42	0.29	5600	0.42	0.29	5600
40	1750	43.8	2.10	1.70	2444	2.62	2.04	2944	2.80	2.30	3320	3.33	2.60	3747
	1150	28.8	1.52	1.19	2600	1.75	1.37	3000	2.25	1.78	3900	2.49	1.98	4325
	690	17.3	1.08	0.85	3100	1.17	0.91	3350	1.58	1.25	4600	1.68	1.33	4900
	100	2.5	0.25	0.15	3846	0.25	0.15	3846	0.37	0.23	5800	0.37	0.23	5800
50	1750	35	1.70	1.33	2403	2.12	1.55	2791	2.28	1.82	3280	2.71	2.01	3626
	1150	23	1.21	0.89	2450	1.41	1.04	2850	1.67	1.24	3400	1.96	1.46	4000
	690	13.8	0.87	0.61	2800	0.95	0.67	3050	1.19	0.85	3900	1.28	0.92	4200
	100	2.0	0.19	0.10	3325	0.19	0.10	3325	0.25	0.14	4500	0.25	0.14	4500
60	1750	29.2	1.40	1.06	2281	1.75	1.18	2549	1.88	1.45	3128	2.24	1.52	3496
	1150	19.2	1.05	0.70	2300	1.23	0.82	2700	1.50	1.02	3350	1.72	1.17	3850
	690	11.5	0.71	0.48	2650	0.78	0.53	2900	1.02	0.69	3800	1.10	0.75	4100
	100	1.7	0.16	0.083	3100	0.16	0.083	3100	0.22	0.12	4400	0.22	0.12	4400
80	1750	21.9	0.95	0.62	1795	—	—	—	—	—	—	—	—	—
	1150	14.4	0.81	0.50	2171	—	—	—	—	—	—	—	—	—
	690	8.6	0.61	0.34	2512	—	—	—	—	—	—	—	—	—
	100	1.3	0.14	0.06	3030	—	—	—	—	—	—	—	—	—
100	1750	17.5	0.65	0.39	1414	—	—	—	—	—	—	—	—	—
	1150	11.5	0.56	0.31	1711	—	—	—	—	—	—	—	—	—
	690	6.9	0.43	0.22	1980	—	—	—	—	—	—	—	—	—
	100	1	0.10	0.04	2387	—	—	—	—	—	—	—	—	—
Overhung Load*			1300 LBS.			1300 LBS			2000 LBS.			2000 LBS.		
Output Shaft Thrust Load			1100 LBS.			1100 LBS.			1300 LBS.			1300 LBS.		

RATINGS SHOWN REFLECT MAXIMUM GEAR CAPACITY WITH KLUBERSYNTH UH1 6-460.

*Overhung Load is at centerline of output shaft projection and with NO THRUST Load.

Note: For input speeds above 1750 RPM. Do NOT exceed 1750 RPM input horsepower (See page 353).

700 Series Single Reduction Ratio & Capacity Selection Tables

Horsepower and Torque Capacities at Listed RPM Inputs (Service Factor 1.0)

Series Size			752			752F			760			760F		
				Output			Output			Output			Output	
Ratio	Input RPM	Output RPM	Input HP	HP	Torque (lb-in)	Input HP	HP	Torque (lb-in)	Input HP	HP	Torque (lb-in)	Input HP	HP	Torque (lb-in)
10	**1750**	175	17.31	16.27	5860	21.63	19.94	7182	23.83	22.40	8067	26.13	24.04	8658
	1150	115	12.27	11.31	6200	14.25	13.14	7200	18.60	17.15	9400	20.78	19.16	10500
	690	69	9.58	8.54	7800	10.55	9.41	8600	14.87	13.41	12250	16.09	14.51	13250
	100	10	1.93	1.67	10500	1.93	1.67	10500	3.19	2.79	17600	3.19	2.79	17600
15	**1750**	116.7	13.06	12.25	6618	16.32	14.49	7829	17.87	16.76	9055	22.33	19.83	10712
	1150	77.7	9.14	8.15	6700	10.50	9.37	7700	12.56	11.20	9200	14.73	13.14	10800
	690	46	7.19	6.42	8800	7.74	6.92	9475	9.20	8.21	11250	10.76	9.61	13184
	100	6.7	1.56	1.26	11900	1.56	1.26	11900	2.18	1.81	17000	2.18	1.81	17000
20	**1750**	87.5	10.19	9.49	6830	12.74	11.21	8075	14.02	13.07	9412	17.52	15.38	11080
	1150	57.5	7.57	6.66	7300	8.70	7.66	8400	10.63	9.35	10250	11.93	10.49	11500
	690	34.5	5.59	4.93	9000	5.97	5.25	9600	7.83	6.89	12600	8.54	7.53	13750
	100	5.0	1.18	0.92	11585	1.18	0.92	11585	1.63	1.34	17000	1.63	1.34	17000
30	**1750**	58.3	7.30	6.45	6964	9.12	7.72	8336	9.81	8.89	9603	12.26	10.38	11219
	1150	38.3	5.50	4.68	7700	6.29	5.34	8800	7.50	6.38	10500	8.39	7.14	11750
	690	23	4.03	3.43	9400	4.38	3.72	10200	5.48	4.67	12800	5.91	5.04	13800
	100	3.3	0.93	0.64	12250	0.93	0.64	12250	1.24	0.92	17500	1.24	0.92	17500
40	**1750**	43.8	5.60	4.78	6889	7.00	5.68	8178	7.65	6.64	9566	9.56	7.77	11197
	1150	28.8	4.06	3.33	7300	4.68	3.84	8400	5.74	4.68	10250	6.44	5.25	11500
	690	17.3	3.01	2.46	9000	3.21	2.62	9600	4.21	3.44	12600	4.60	3.75	13750
	100	2.5	0.71	0.46	11585	0.71	0.46	11585	1.00	0.67	17000	1.00	0.67	17000
50	**1750**	35	4.49	3.75	6751	5.61	4.26	7678	6.12	5.21	9378	7.65	5.46	9836
	1150	23	3.34	2.48	6800	3.93	2.92	8000	4.68	3.58	9800	5.25	4.01	11000
	690	13.8	2.32	1.77	8100	2.52	1.93	8800	3.52	2.68	12250	3.80	2.90	13250
	100	2.0	0.46	0.28	9000	0.46	0.28	9000	0.80	0.51	16000	0.80	0.51	16000
60	**1750**	29.2	3.67	2.97	6416	4.59	3.22	6953	5.03	4.13	8934	6.29	4.41	9528
	1150	19.2	2.89	2.04	6700	3.33	2.34	7700	4.31	2.98	9800	4.84	3.35	11000
	690	11.5	2.07	1.46	8000	2.25	1.59	8700	3.22	2.23	12200	3.48	2.41	13200
	100	1.7	0.43	0.24	9000	0.43	0.24	9000	0.74	0.43	16000	0.74	0.43	16000
Overhung Load*			**2200 LBS.**			**2200 LBS**			**2400 LBS.**			**2400 LBS.**		
Output Shaft Thrust Load			**1900 LBS.**			**1900 LBS.**			**2100 LBS.**			**2100 LBS.**		

RATINGS SHOWN REFLECT MAXIMUM GEAR CAPACITY WITH KLUBERSYNTH UH1 6-460.

*Overhung Load is at centerline of output shaft projection and with NO THRUST Load.

Note: For input speeds above 1750 RPM. Do NOT exceed 1750 RPM input horsepower (See page 353).

700 Series Single Reduction Flanged Reducer Dimensions

F700/QC700 Series Flanged Quill/Flanged Coupling Types

Basic Models (No Base)

FOR ORDERING INFORMATION, see Page 16

FOR RATING INFORMATION, See Pages 17, 22-33

ASSEMBLY TYPES*

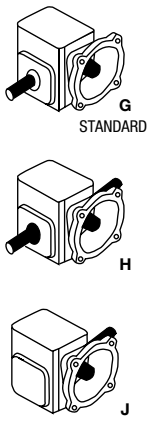

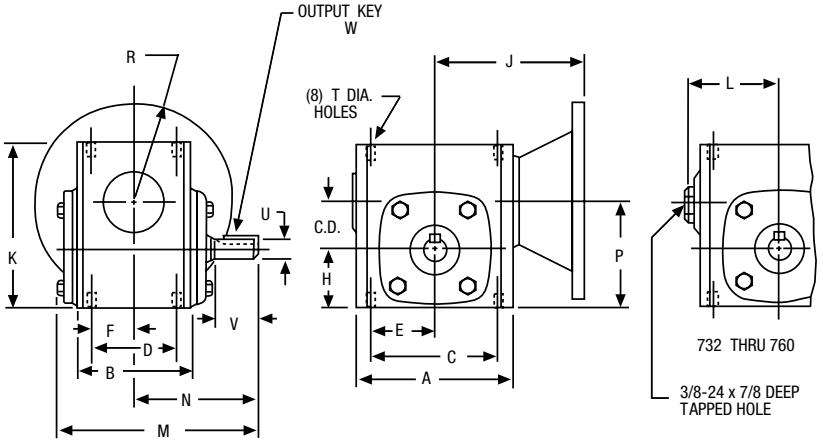

ALL DIMENSIONS IN INCHES

Size	C.D.	A	B	C	D	E	F	H	J-NEMA Mounting †† F700 56C 140TC	J-NEMA Mounting †† F700 180TC 210C	J-NEMA Mounting †† QC700 56C 140TC	J-NEMA Mounting †† QC700 180TC 210TC 250TC	J-NEMA Mounting †† RF700 56C	J-NEMA Mounting †† RF700 180TC 210TC 250TC	K	L	M
710	1.00	3.25	2.50	2.63	1.69	1.31	0.84	1.31	3.97	—	5.01	—	5.72	—	3.63	—	4.53
713	1.33	4.25	2.88	3.25	2.00	1.63	1.00	1.72	3.94	—	5.46	—	6.59	—	4.64	—	6.03
715	1.54	5.13	3.69	4.19	2.75	2.09	1.38	1.91	4.50	—	6.11	—	7.34	—	5.38	—	6.84
718	1.75	5.50	3.69	4.19	2.75	2.09	1.38	2.06	4.69	—	6.29	—	7.53	—	5.75	—	6.81
721	2.06	6.00	3.81	5.00	2.88	2.50	1.44	2.28	5.06	—	6.76	—	8.31	—	6.38	—	7.28
724	2.38	6.38	4.06	5.00	2.88	2.50	1.44	2.50	5.25	5.69	6.95	7.81	8.50	9.94	6.94	—	7.81
726	2.62	7.38	4.44	6.38	3.38	3.19	1.69	2.94	5.75	6.19	7.39	8.31	9.47	10.44	8.00	—	8.53
730	3.00	8.12	5.25	7.00	4.00	3.50	2.00	3.25	6.20	6.64	7.84	8.77	9.92	10.88	8.88	—	10.02
732	3.25	9.00	5.88	7.50	4.00	3.75	2.00	3.50	6.56	7.00	8.20	9.13	10.28	11.25	9.38	4.94	10.81
738	3.75	10.00	6.38	8.50	4.75	4.25	2.38	3.88	7.06	7.50	8.70	10.28	11.81	12.88	10.44	5.50	11.88
752	5.16	13.13	7.38	11.00	5.81	5.50	2.91	5.31	—	—	—	—	—	16.00	13.75	7.19	13.81
760	6.00	14.50	8.13	12.75	6.38	6.38	3.19	6.50	—	—	—	—	—	16.69	16.50	7.94	15.31

Size	N	P	R-NEMA Mounting 42CZ	R-NEMA Mounting 56C 140TC	R-NEMA Mounting 180TC 210TC 250TC	T TAP Size	T Depth	Low Speed Shaft U +.000 -.001	Low Speed Shaft V	Low Speed Shaft W-Key Sq.	Low Speed Shaft W-Key Lenght	Aprox. Weight (LBS.) F700	Aprox. Weight (LBS.) QC700	Fan Kit No.**
710	2.88	2.31	2.16	3.31	—	1/4-20	.44	.500	1.19	1/8	5/8	6	8	—
713	4.00	3.06	—	3.31	—	5/16-18	.50	.625	2.00	3/16	1	12	15	—
715	4.31	3.44	—	3.31	—	5/16-18	.50	.750	1.78	3/16	1	18	24	—
718	4.31	3.81	—	3.31	—	5/16-18	.50	.875	1.78	3/16	1	20	27	—
721	4.69	4.34	—	3.31	—	3/8-16	.56	1.000	2.09	1/4	1-1/4	25	30	—
724	5.09	4.88	—	3.31	4.63	3/8-16	.56	1.125	2.38	1/4	1-1/4	31	36	—
726	5.63	5.56	—	3.31	4.63	3/8-16	.56	1.125	2.63	1/4	1-15/16	46	47	—
730	6.75	6.25	—	3.31	4.63	7/16-14	.88	1.250	3.25	1/4	2-1/4	66	72	—
732	7.06	6.75	—	3.31	4.63	7/16-14	.66	1.375	3.25	5/16	2-7/16	84	84	51450
738	7.75	7.63	—	3.31	4.63	1/2-13	.81	1.625	3.50	3/8	2-1/4	117	119	51451
752	9.06	10.50	—	—	4.63	5/8-11	1.00	2.000	4.16	1/2	2-15/16	—	221	51452
760	10.00	12.50	—	—	4.63	5/8-11	1.00	2.250	4.56	1/2	3-3/8	—	270	51453

*See Assemblies and Mounting Positions, Page 18.
**For Fan Kits, see Page 130.
For Base Kits, see Page 129.
†† 42CZ Flange Dimensions: F700 J = 3.16 : QC700 J = 4.15 : RF700 J = 4.76

F700/QC700 Series Flanged Quill/Flanged Coupling Types

B Position Horizontal Base

FOR ORDERING INFORMATION, see Page 16

FOR RATING INFORMATION, See Pages 17, 22-33

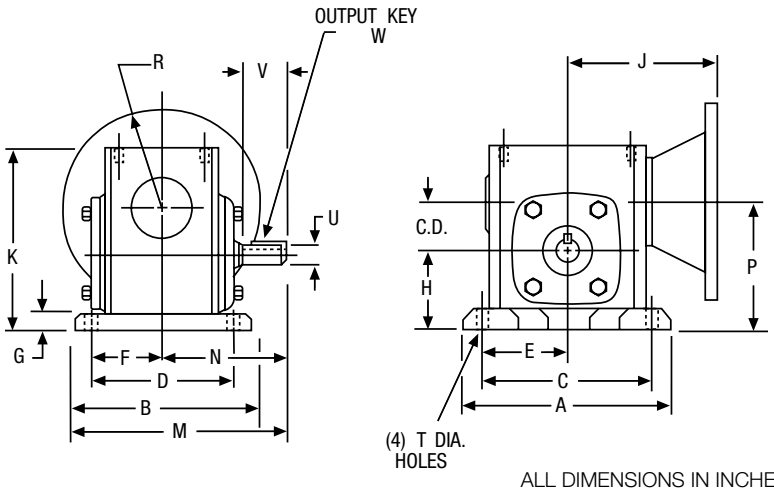

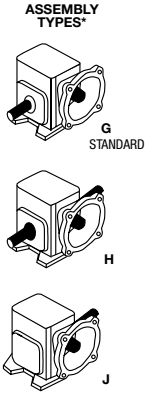

ALL DIMENSIONS IN INCHES

Size	C.D.	A	B	C	D	E	F	G	H	J-NEMA Mounting †† F700 56C 140TC	F700 180TC 210C	QC700 56C 140TC	QC700 180TC 210TC 250TC	RF700 56C	RF700 180TC 210TC 250TC	K	M
710	1.00	4.63	3.69	3.75	2.88	1.88	1.44	0.44	1.75	3.97	—	5.01	—	5.72	—	4.06	4.72
713	1.33	5.38	4.19	4.38	3.31	2.19	1.66	0.53	2.25	3.94	—	5.46	—	6.59	—	5.19	6.09
715	1.54	6.44	5.44	5.25	4.31	2.63	2.16	0.59	2.50	4.50	—	6.11	—	7.34	—	5.97	7.03
718	1.75	7.00	5.69	5.75	4.50	2.88	2.25	0.69	2.75	4.69	—	6.29	—	7.53	—	6.44	7.16
721	2.06	7.75	5.94	6.38	4.69	3.19	2.34	0.72	3.00	5.06	—	6.76	—	8.31	—	7.09	7.66
724	2.38	8.50	6.19	7.06	4.88	3.53	2.44	0.75	3.25	5.25	5.69	6.95	7.81	8.50	9.94	7.69	8.19
726	2.62	9.63	6.66	8.00	5.25	4.00	2.63	0.75	3.69	5.75	6.19	7.39	8.31	9.47	10.44	8.75	8.97
730	3.00	10.00	7.50	8.44	5.88	4.22	2.94	0.75	4.00	6.20	6.64	7.84	8.77	9.92	10.88	9.63	10.50
732	3.25	11.19	7.66	9.50	6.13	4.75	3.06	0.88	4.38	6.56	7.00	8.20	9.13	10.28	11.25	10.25	10.94
738	3.75	12.13	8.66	10.38	7.00	5.19	3.50	0.94	4.81	7.06	7.50	8.70	10.28	11.81	12.88	11.38	12.09
752	5.16	16.38	10.63	14.13	8.38	7.06	4.19	1.13	6.44	—	—	—	—	—	16.00	14.88	14.38
760	6.00	19.00	12.00	16.50	9.50	8.25	4.75	1.25	7.75	—	—	—	—	—	16.69	17.75	16.00

Size	N	P	R-NEMA Mounting 42CZ	R-NEMA Mounting 56C 140TC	R-NEMA Mounting 180TC 210TC 250TC	T	Low Speed Shaft U +.000 -.001	Low Speed Shaft V	Low Speed Shaft W-Key Sq.	Low Speed Shaft W-Key Length	Aprox. Weight (LBS.) F700	Aprox. Weight (LBS.) QC700	Base Kit No.†	Fan Kit No.**
710	2.88	2.75	2.16	3.31	—	11/32	.500	1.19	1/8	5/8	7	8	56575	—
713	4.00	3.59	—	3.31	—	11/32	.625	2.00	3/16	1	13	16	56577	—
715	4.31	4.06	—	3.31	—	13/32	.750	1.78	3/16	1	19	25	56438	—
718	4.31	4.50	—	3.31	—	13/32	.875	1.78	3/16	1	21	28	56585	—
721	4.69	5.06	—	3.31	—	15/32	1.000	2.09	1/4	1-1/4	26	31	56440	—
724	5.09	5.63	—	3.31	4.63	15/32	1.125	2.38	1/4	1-1/4	32	37	56591	—
726	5.63	6.31	—	3.31	4.63	17/32	1.125	2.63	1/4	1-15/16	49	49	56595	—
730	6.75	7.00	—	3.31	4.63	17/32	1.250	3.25	1/4	2-1/4	71	72	65544	—
732	7.06	7.63	—	3.31	4.63	17/32	1.375	3.25	5/16	2-7/16	93	94	56599	51450
738	7.75	8.56	—	3.31	4.63	19/32	1.625	3.50	3/8	2-1/4	131	140	56603	51451
752	9.06	11.63	—	—	4.63	25/32	2.000	4.16	1/2	2-15/16	—	242	56607	51452
760	10.00	13.75	—	—	4.63	29/32	2.250	4.56	1/2	3-3/8	—	300	56610	51453

*See Assemblies and Mounting Positions, Page 18.
**For Fan Kits, see Page 130.
For Base Kits, see Page 129.
†† 42CZ Flange Dimensions: F700 J = 3.16 : QC700 J = 4.15 : RF700 J = 4.76

700 Series Single Reduction Flanged Reducer Dimensions

F700/QC700 Series Flanged Quill/Flanged Coupling Types

A Position Horizontal Base

FOR ORDERING INFORMATION, see Page 16

FOR RATING INFORMATION, See Pages 17, 22-33

ASSEMBLY TYPES*

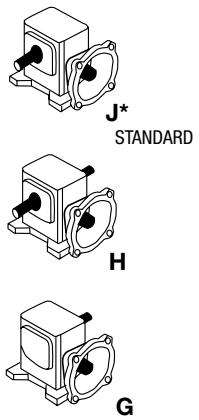

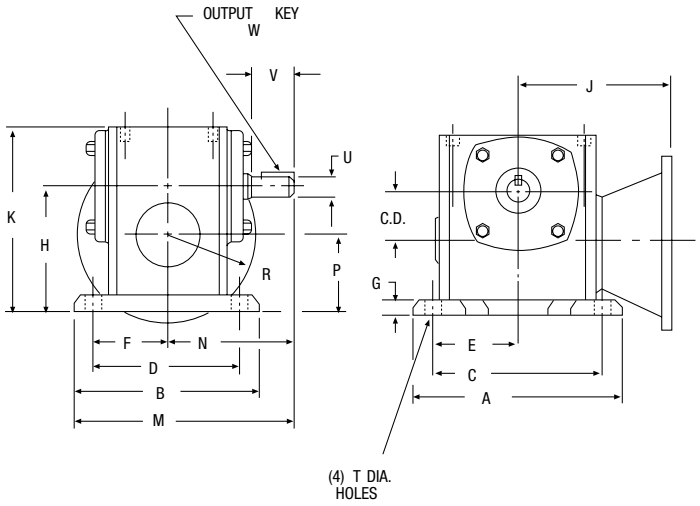

All DIMENSIONS IN INCHES

NEMA Mounting	Input	
	Bore +.0015 -.0000	Keyway
42CZ	0.5	1/8 x 1/16
56C	0.625	3/16 x 3/32
140TC	0.875	3/16 x 3/32
180TC	1.125	1/4 x 1/8
210TC	1.375	5/16 x 5/32

All DIMENSIONS IN INCHES

Size	C.D.	A	B	C	D	E	F	G	H	J-NEMA Mounting ††						K	M
										F700		QC700		RF700			
										56C 140TC	180TC 210C	56C 140TC	180TC 210TC 250TC	56C	180TC 210TC 250TC		
710	1.00	4.62	3.69	3.75	2.88	1.88	1.44	0.44	2.75	3.97	—	5.01	—	5.72	—	4.06	4.72
713	1.33	5.38	4.19	4.38	3.31	2.19	1.66	0.53	3.47	3.94	—	5.46	—	6.59	—	5.19	6.09
715	1.54	6.44	5.44	5.25	4.31	2.63	2.16	0.59	4.06	4.50	—	6.11	—	7.34	—	5.97	7.03
718	1.75	7.00	5.69	5.75	4.50	2.88	2.25	0.69	4.38	4.69	—	6.29	—	7.53	—	6.44	7.16
721	2.06	7.75	5.94	6.37	4.69	3.19	2.34	0.72	4.81	5.06	—	6.76	—	8.31	—	7.09	7.66
724	2.37	8.50	6.19	7.06	4.88	3.53	2.44	0.75	5.19	5.25	5.69	6.95	7.81	8.50	9.94	7.69	8.19
726	2.62	9.63	6.66	8.00	5.25	4.00	2.62	0.75	5.81	5.75	6.19	7.39	8.31	9.47	10.44	8.75	8.97
730	3.00	10.00	7.50	8.44	5.88	4.22	2.94	0.75	6.38	6.20	6.64	7.84	8.77	9.92	10.88	9.63	10.50
732	3.25	11.19	7.66	9.50	6.12	4.75	3.06	0.88	6.75	6.56	7.00	8.20	9.13	10.28	11.25	10.25	10.89
738	3.75	12.13	8.66	10.37	7.00	5.19	3.50	0.94	7.50	7.06	7.50	8.70	10.28	11.81	12.88	11.38	12.09

Size	N	P	R NEMA Mounting					T Holes	Low Speed Shaft				Aprox. Wieght (LBS.)		Base Kit No.†	Fan Kit No.**
			42CZ	56C	140TC	180TC	210TC		U +.000/-.001	V	W-Key Sq.	W-Key Length	F700	QC700		
710	2.88	1.75	2.16	3.31	—	—	—	11/32	.500	1.19	1/8	5/8	7	8	56575	—
713	4.00	2.13	—	3.31	—	—	—	11/32	.625	2.00	3/16	1	13	16	56577	—
715	4.31	2.50	—	3.31	3.31	—	—	13/32	.750	1.78	3/16	1	19	25	56438	—
718	4.31	2.63	—	3.31	3.31	—	—	13/32	.875	1.78	3/16	1	21	28	56585	—
721	4.69	2.75	—	3.31	3.31	—	—	15/32	1.000	2.09	1/4	1-1/4	26	31	56440	—
724	5.09	2.81	—	3.31	3.31	4.63	—	15/32	1.125	2.37	1/4	1-1/4	32	37	56591	—
726	5.62	3.19	—	3.31	3.31	4.63	—	17/32	1.125	2.62	1/4	1-15/16	49	49	56595	—
730	6.75	3.38	—	3.31	3.31	4.63	—	17/32	1.250	3.25	1/4	2-1/4	71	72	65544	—
732	7.06	3.50	—	3.31	3.31	4.63	—	17/32	1.375	3.25	5/16	2-7/16	93	94	56599	51450
738	7.75	3.75	—	—	3.31	4.63	4.63	19/32	1.625	3.50	3/8	2-1/4	131	140	56603	51451

* See Assemblies and Mounting Positions, Page 18.
** For Fan Kits, see Page 130.
For Base Kits, see Page 129.
†† 42CZ Flange Dimensions: F700 J = 3.16 : QC700 J = 4.15 : RF700 J = 4.76

F700/QC700 Series Flanged Quill/Flanged Coupling Types

BRB Position Horizontal Base with Riser Block

FOR ORDERING INFORMATION, see Page 16

FOR RATING INFORMATION, See Pages 17, 22-33

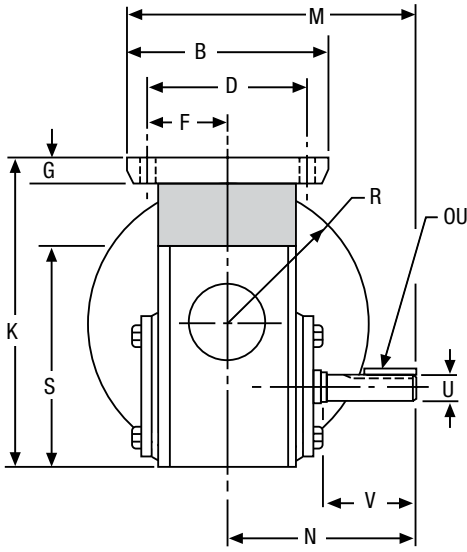

ASSEMBLY TYPES*

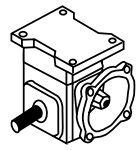

G STANDARD

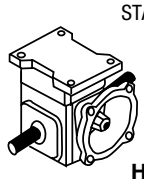

H

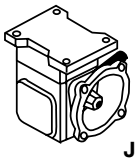

J

Size	C.D.	A	B	C	D	E	F	G	H NEMA Mounting 42CZ	H NEMA Mounting 56C 140TC	H NEMA Mounting 180TC 210C	J-NEMA Mounting †† F700 56C 140TC	F700 180TC 210C	QC700 56C 140TC	QC700 180TC 210C	RF700 56C	RF700 180TC 210TC 250TC	K 42CZ	K 56C 140TC	K 180TC 210C
710	1.00	4.63	3.69	3.75	2.88	1.88	1.44	.44	3.94	5.13	—	3.97	—	5.01	—	5.72	—	5.25	6.44	—
713	1.33	5.38	4.19	4.38	3.31	2.19	1.66	.53	—	5.47	—	3.94	—	5.46	—	6.59	—	—	7.19	—
715	1.54	6.44	5.44	5.25	4.31	2.63	2.16	.59	—	5.66	—	4.50	—	6.11	—	7.34	—	—	7.57	—
718	1.75	7.00	5.69	5.75	4.50	2.88	2.25	.69	—	6.06	—	4.69	—	6.29	—	7.53	—	—	8.13	—
721	2.06	7.75	5.94	6.38	4.69	3.19	2.34	.72	—	6.34	—	5.06	—	6.76	—	8.31	—	—	8.63	—
724	2.38	8.50	6.19	7.06	4.88	3.53	2.44	.75	—	6.69	8.19	5.25	5.69	6.95	7.81	8.50	9.94	—	9.19	10.69
726	2.62	9.63	6.66	8.00	5.25	4.00	2.63	.75	—	7.06	8.33	5.75	6.19	7.39	8.31	9.47	10.44	—	10.00	11.27
730	3.00	10.00	7.5	8.44	5.88	4.22	2.94	.75	—	7.44	8.51	6.20	6.64	7.84	8.77	9.92	10.88	—	10.69	11.76
732	3.25	11.19	7.66	9.5	6.13	4.75	3.06	.88	—	7.94	9.13	6.56	7.00	8.20	9.13	10.28	11.25	—	11.44	12.63

Size	M	N	P NEMA Mounting 42CZ	P NEMA Mounting 56C 140TC	P NEMA Mounting 180TC 210C	R NEMA Mounting 42CZ	R NEMA Mounting 56C 140TC	R NEMA Mounting 180TC 210C	S	T	Low Speed Shaft U +.000 -.001	V	W-Key Sq.	W-Key Length	Aprox. Weight (LBS.) F	Aprox. Weight (LBS.) QC	Base Kit No.†	Fan Kit No.**
710	4.72	2.88	2.94	4.13	—	1.69	3.31	—	3.62	11/32	.500	1.19	1/8	5/8	7	8	56575	—
713	6.09	4.00	—	4.13	—	—	3.31	—	4.66	11/32	.625	2.00	3/16	1	13	16	56577	—
715	7.03	4.31	—	4.10	—	—	3.31	—	5.38	13/32	.750	1.78	3/16	1	19	24	56438	—
718	7.16	4.31	—	4.32	—	—	3.31	—	5.75	13/32	.875	1.78	3/16	1	21	27	56585	—
721	7.66	4.69	—	4.29	—	—	3.31	—	6.38	15/32	1.000	2.09	1/4	1 1/4	26	31	56440	—
724	8.19	5.09	—	4.31	5.81	—	3.31	4.63	6.94	15/32	1.125	2.38	1/4	1 1/4	32	37	56591	—
726	8.97	5.63	—	4.45	5.71	—	3.31	4.63	8.00	17/32	1.125	2.63	1/4	1 15/16	49	49	56595	—
730	10.50	6.75	—	4.44	5.51	—	3.31	4.63	8.88	17/32	1.250	3.25	1/4	2-1/4	71	72	65544	—
732	10.94	7.06	—	4.69	5.88	—	3.31	4.63	9.38	17/32	1.375	3.25	5/16	2 7/16	93	94	56599	51450

* See Assemblies and Mounting Positions, Page 18.
** For Fan Kits, see Page 130.
For Base Kits, see Page 129.
†† 42CZ Flange Dimensions: F700 J = 3.16 : QC700 J = 4.15 : RF700 J = 4.76

700 Series Single Reduction Flanged Reducer Dimensions

F700/QC700 Series Flanged Quill/Flanged Coupling Types

C/D Position Vertical Base; C/E High Base; D/F Low Base

FOR ORDERING INFORMATION, see Page 16

FOR RATING INFORMATION, See Pages 17, 22-33

ASSEMBLY TYPES*

C/D BASES **E/F BASES**

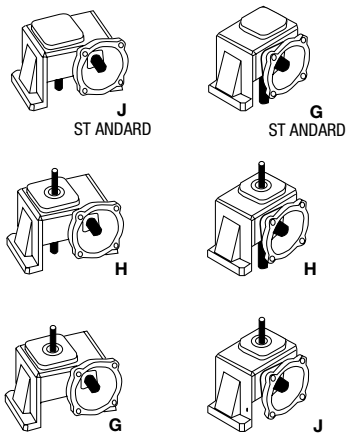

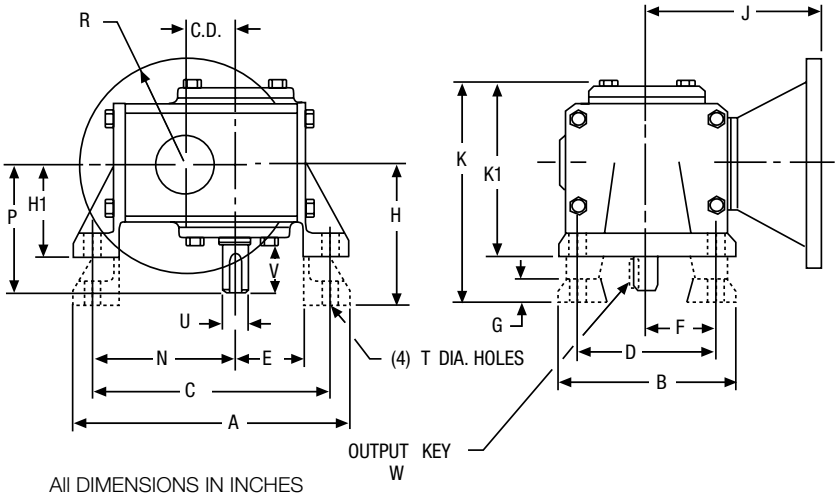

All DIMENSIONS IN INCHES

Size	C.D.	A	B	C	D	E	F	G	H	H1	J-NEMA Mounting ††						K	K1
											F700		QC700		RF700			
											56C 140TC	180TC 210C	56C 140TC	180TC 210TC 250TC	56C	180TC 210TC 250TC		
710	1.00	6.06	3.22	5.13	2.31	1.38	1.16	0.44	2.94	—	3.97	—	5.01	—	5.72	—	4.59	—
713	1.33	7.09	4.13	6.16	3.25	1.78	1.63	0.53	3.56	2.31	3.94	—	5.46	—	6.59	—	5.59	4.34
715	1.54	8.03	5.16	6.97	4.00	1.97	2.00	0.69	4.38	3.00	4.50	—	6.11	—	7.34	—	6.91	5.53
718	1.75	8.44	5.16	7.38	4.00	2.13	2.00	0.69	4.38	3.00	4.69	—	6.29	—	7.53	—	6.88	5.50
721	2.06	9.50	6.03	8.38	4.88	2.34	2.44	0.72	4.88	3.13	5.06	—	6.76	—	8.31	—	7.50	5.75
724	2.38	10.06	6.31	8.94	4.88	2.56	2.44	0.75	5.25	3.38	5.25	5.69	6.95	7.81	8.50	9.94	7.97	6.09
726	2.62	11.69	7.38	10.13	5.75	3.00	2.88	0.88	5.59	3.63	5.75	6.19	7.39	8.31	9.47	10.44	8.50	6.53
730	3.00	12.50	8.00	11.13	6.00	3.34	3.00	0.94	5.88	3.94	6.20	6.64	7.84	8.77	9.92	10.88	9.13	7.20
732	3.25	13.38	9.00	11.88	6.13	3.56	3.06	0.88	6.25	4.69	6.56	7.00	8.20	9.13	10.28	11.25	10.00	8.56
738	3.75	15.69	10.00	13.94	8.00	4.00	4.00	0.94	7.00	5.25	7.06	7.50	8.70	10.28	11.81	12.88	11.12	9.38
752	5.16	20.50	13.13	18.00	10.00	5.44	5.00	1.13	8.63	6.38	—	—	—	—	—	16.00	13.38	11.13
760	6.00	23.25	14.75	20.88	11.75	6.63	5.88	1.13	9.63	7.31	—	—	—	—	—	16.69	14.94	12.63

Size	N	P	R NEMA Mounting			T Holes	Low Speed Shaft				High Base			Low Base			Fan Kit No.**
			42CZ	180TC 56C 140TC	210TC 250TC		U +.000 -.001	V	W-KEY Sq.	W-KEY Length	Approx. Weight (LBS.) F	Approx. Weight (LBS.) QC	Base Kit No. †	Approx. Weight (LBS.) F	Approx. Weight (LBS.) QC	Base Kit No. †	
710	3.06	2.88	2.16	3.31	—	11/32	.500	1.19	1/8	5/8	7	10	56576	—	—	—	—
713	3.69	4.00	—	3.31	—	11/32	.625	2.00	3/16	1	13	19	56578	12	16	56579	—
715	4.25	4.31	—	3.31	—	13/32	.750	1.78	3/16	1	22	27	56582	21	26	56583	—
718	4.50	4.31	—	3.31	—	13/32	.875	1.78	3/16	1	24	30	56582	23	29	56583	—
721	5.09	4.69	—	3.31	—	15/32	1.000	2.09	1/4	1-1/4	29	35	56588	28	32	56589	—
724	5.44	5.09	—	3.31	4.63	15/32	1.125	2.38	1/4	1-1/4	39	44	56592	38	40	56593	—
726	6.13	5.63	—	3.31	4.63	17/32	1.125	2.63	1/4	1-15/16	59	57	56596	51	53	56597	—
730	6.75	6.75	—	3.31	4.63	17/32	1.250	3.25	1/4	2-1/4	77	79	65545	73	76	65546	—
732	7.13	7.06	—	3.31	4.63	17/32	1.375	3.25	5/16	2-7/16	95	98	56600	90	93	56601	51450
738	8.31	7.75	—	3.31	4.63	19/32	1.625	3.50	3/8	2-1/4	153	147	56604	143	136	56605	51451
752	10.56	9.06	—	—	4.63	29/32	2.000	4.16	1/2	2-15/16	—	267††	56608	—	255	56609	51452
760	12.19	10.00	—	—	4.63	29/32	2.250	4.56	1/2	3-3/8	—	345††	56611	—	325	56612	51453

* See Assemblies and Mounting Positions, Page 18. ** For Fan Kits, see Page 130.
† For Base Kits, see Page 129.
†† 42CZ Flange Dimensions: F700 J = 3.16 : QC700 J = 4.15 : RF700 J = 4.76

700 Series Single Reduction Flanged Reducer Dimensions

F700/QC700 Series Flanged Quill/Flanged Coupling Types

X Position Vertical Base; X = Input Vertical Up

FOR ORDERING INFORMATION, see Page 16

FOR RATING INFORMATION, See Pages 17, 22-33

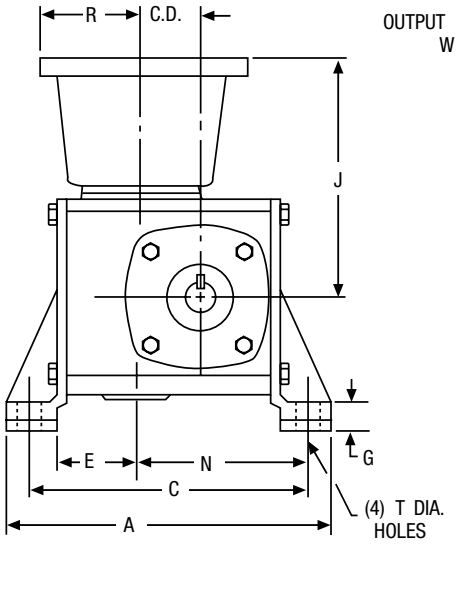

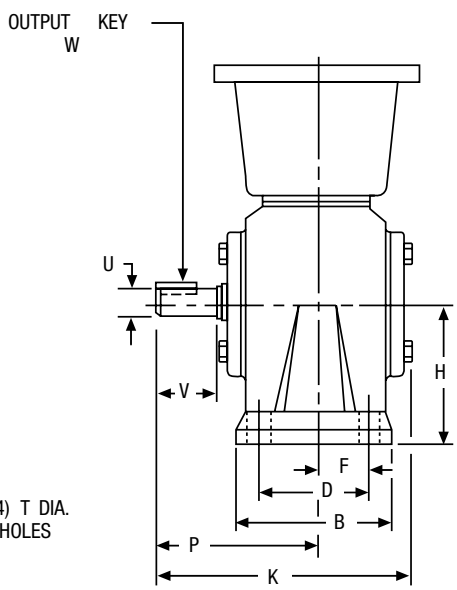

ASSEMBLY TYPES*

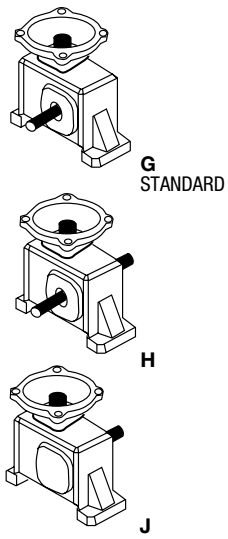

All DIMENSIONS IN INCHES

Size	C.D.	A	B	C	D	E	F	G	H	J-NEMA Mounting ††						K	N
										F700		QC700		RF700			
										56C 140TC	180TC 210C	56C 140TC	180TC 210TC	56C	180TC 210TC 250TC		
713	1.33	7.28	2.91	6.41	2.00	1.70	1.00	0.53	2.94	3.94	—	5.46	—	6.59	—	6.03	3.92
715	1.54	8.25	3.72	7.25	2.50	2.00	1.25	0.69	3.50	4.50	—	6.11	—	7.34	—	6.84	4.37
718	1.75	8.62	3.72	7.63	2.50	2.00	1.25	0.69	3.50	4.69	—	6.29	—	7.53	—	6.81	4.75
721	2.06	9.75	3.84	8.63	2.63	2.09	1.31	0.72	3.94	5.06	—	6.76	—	8.31	—	7.28	5.47
724	2.37	10.31	4.13	9.19	2.88	2.13	1.44	0.75	4.06	5.25	5.69	6.95	7.81	8.50	9.94	7.81	6.00
726	2.62	11.88	4.53	10.38	3.13	2.50	1.56	0.88	4.75	5.75	6.19	7.39	8.31	9.47	10.44	8.53	6.75

Size	P	R-NEMA Mounting		T Holes	Low Speed Shaft				Aproximate Weight (LBS.)		Base Kit No.†
		56C 140TC	180TC		U +.000 -.001	V	W-Key Sq.	W-Key Length	F	QC	
713	4.00	3.31	—	11/32	.625	2.00	3/16	1	13	13	55196
715	4.31	3.31	—	13/32	.750	1.78	3/16	1	21	24	55349
718	4.30	3.31	—	13/32	.875	1.78	3/16	1	22	27	55349
721	4.69	3.31	—	15/32	1.000	2.09	1/4	1-1/4	28	30	55644
724	5.09	3.31	4.63	15/32	1.125	2.38	1/4	1-1/4	37	37	55678
726	5.63	3.31	4.63	17/32	1.125	2.63	1/4	1-1/4	54	55	55769

* Assemblies define output (slow speed) shaft projection with respect to input (high speed) shaft and mounted surfaces. Input may be rotated clockwise or counterclockwise. See Assemblies and Mounting Positions, Page 18.

† For Base Kits, see Page 129.

†† 42CZ Flange Dimensions: F700 J = 3.16 : QC700 J = 4.15 : RF700 J = 4.76

700 Series Single Reduction Flanged Reducer Dimensions

HF700/HQC700 Series Flanged Quill/Flanged Coupling Types

Basic Models (No Base); Bored to Size, Hollow Output Shaft

A

FOR ORDERING INFORMATION, see Page 16

FOR RATING INFORMATION, See Pages 17, 22-33

ASSEMBLY TYPES*

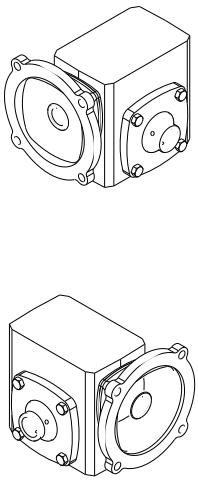

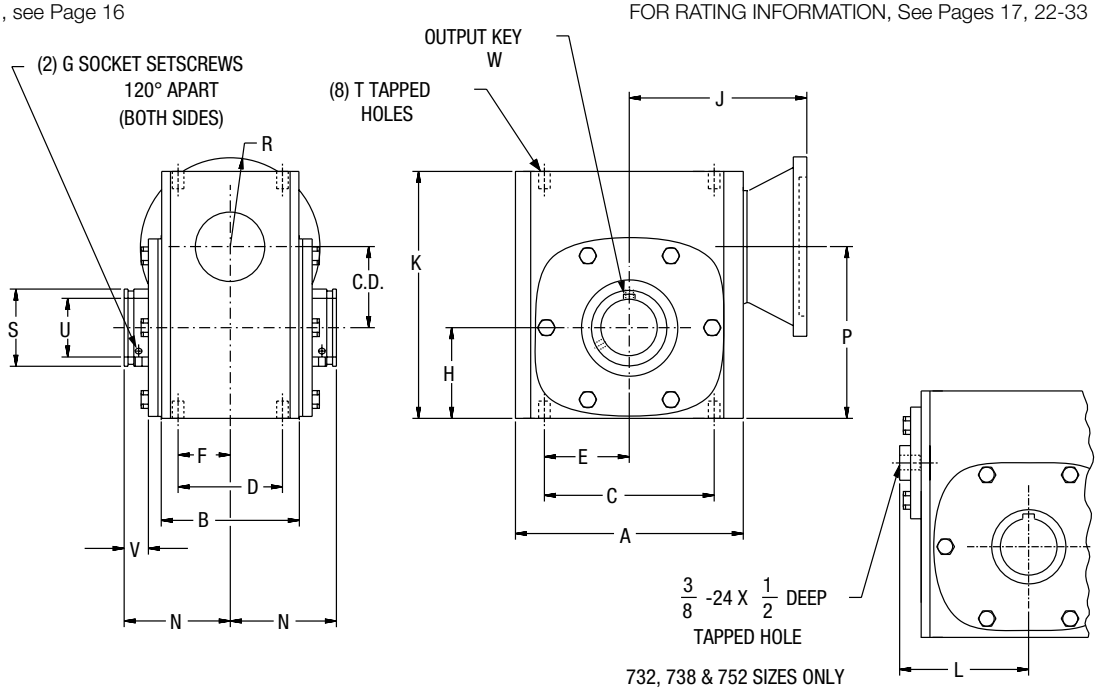

ALL DIMENSIONS IN INCHES

Size	C.D.	A	B	C	D	E	F	G	H	J-NEMA Mounting ††						K	L	N
										F700		QC700		RF700				
										56C 140TC	180TC 210C	56C 140TC	180TC 210TC 250TC	56C	180TC 210TC 250TC			
713	1.33	4.25	2.88	3.25	2.00	1.63	1.00	#10-32	1.72	3.97	—	5.46	—	6.59	—	4.66	—	2.50
715	1.54	5.13	3.69	4.19	2.75	2.09	1.38	#10-32	1.91	4.50	—	6.11	—	7.34	—	5.38	—	3.03
718	1.75	5.50	3.69	4.19	2.75	2.09	1.38	#10-32	2.06	4.69	—	6.29	—	7.53	—	5.75	—	3.03
721	2.06	6.00	3.81	5.00	2.88	2.50	1.44	1/4-28	2.28	5.06	—	6.76	—	8.31	—	6.38	—	3.22
724	2.38	6.38	4.06	5.00	2.88	2.50	1.44	1/4-28	2.50	5.25	5.69	6.95	7.81	8.50	9.94	6.94	—	3.22
726	2.62	7.38	4.44	6.38	3.38	3.19	1.69	5/16-24	2.94	5.75	6.19	7.39	8.31	9.47	10.44	8.00	—	3.44
730	3.00	8.12	5.25	7.00	4.00	3.50	2.00	5/16-24	3.25	6.20	6.64	7.84	8.77	9.92	10.88	8.88	—	4.19
732	3.25	9.00	5.88	7.50	4.00	3.75	2.00	5/16-24	3.50	6.56	7.00	8.20	9.13	10.28	11.25	9.38	4.94	4.31
738	3.75	10.00	6.38	8.50	4.75	4.25	2.38	3/8-24	3.88	7.06	7.50	8.70	10.28	11.81	12.88	10.44	5.50	4.81
752	5.16	13.13	7.38	11.0	5.81	5.50	2.91	3/8-24	5.31	—	—	—	—	—	16.00	13.75	7.19	6.12

Size	P	R-NEMA Mounting		S	T		Low Speed Shaft				Approx. Weight(LBS.)		Fan Kit No.**
		56C 140TC	180TC 210C		Tap Size	Depth	Max U +.0015/-.0000	V	W-Key		HF	HQC	
									Size	Length			
713	3.06	3.31	—	.88	5/16-18	.50	.625	.68			7	9	—
715	3.44	3.31	—	1.38	5/16-18	.50	1.000	.84			21	21	—
718	3.81	3.31	—	1.38	5/16-18	.50	1.000	.74			23	24	—
721	4.34	3.31	—	2.00	3/8-16	.56	1.4375	.87	See Page		27	27	—
724	4.88	3.31	4.63	2.00	3/8-16	.56	1.4375	.75	128 For		36	40	—
726	5.56	3.31	4.63	2.50	3/8-16	.56	1.9375	.78	Key Information		49	49	—
730	6.25	3.31	4.63	2.88	7/16-14	.88	2.1875	1.10			70	74	—
732	6.75	3.31	4.63	2.88	7/16-14	.66	2.1875	.93			90	102	51450
738	7.63	3.31	4.63	3.25	1/2-13	.75	2.4375	1.11			130	141	51451
752	10.50	—	4.63	4.25	5/8-11	1.00	3.4375	1.37			—	242	51457

* See Assemblies and Mounting Positions, Page 18. ** For Fan Kits, see Page 130 . See Page 128 for available bore sizes.
Input may be rotated clockwise or counterclockwise. The "SF" style is recommended for direct replacement only.
†† 42CZ Flange Dimensions: F700 J = 3.16 : QC700 J = 4.15 : RF700 J = 4.76

HF700/HQC700 Series Flanged Quill/Flanged Coupling Types

R/L Position Mounting Bracket; Bored to Size, Hollow Output Shaft

FOR ORDERING INFORMATION, see Page 16

FOR RATING INFORMATION, See Pages 17, 22-33

R Position

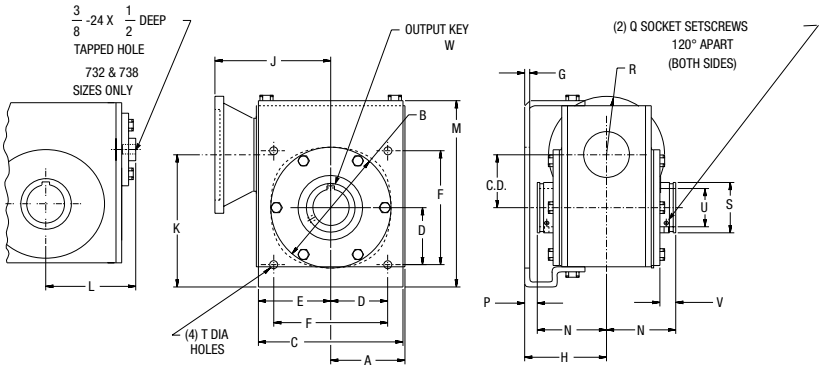

ASSEMBLY TYPES*

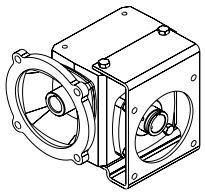

L Position

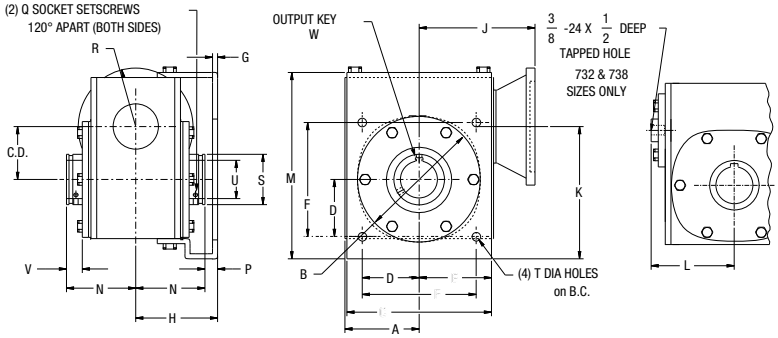

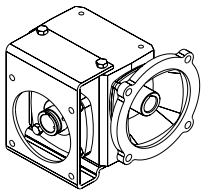

ALL DIMENSIONS IN INCHES

Size	C.D.	A	B	C	D	E	F	G	H	J-NEMA Mounting †† HF700 56C 140TC	HF700 180TC 210C	HQC700 56C 140TC	HQC700 180TC 210TC	RF700 56C	RF700 180TC 210TC 250TC	K	L
713	1.33	2.12	3.62	4.25	1.77	2.12	3.54	0.19	3.00	3.94	—	5.46	—	6.59	—	3.70	—
715	1.54	2.56	3.62	4.75	1.77	2.38	3.54	0.19	3.56	4.50	—	6.11	—	7.34	—	4.07	—
718	1.75	2.75	4.06	5.00	2.08	2.41	4.16	0.19	3.50	4.69	—	6.29	—	7.53	—	4.53	—
721	2.06	3.00	4.50	5.75	2.30	2.88	4.60	0.19	3.75	5.06	—	6.76	—	8.31	—	5.18	—
724	2.38	3.19	5.00	6.12	2.65	2.88	5.30	0.25	3.72	5.25	5.69	6.95	7.81	8.50	9.94	5.98	—
726	2.62	3.69	6.00	7.18	2.83	3.59	5.66	0.25	4.06	5.75	6.19	7.39	8.31	9.47	10.44	6.56	—
730	3.00	4.06	7.00	8.00	3.18	4.00	6.36	0.25	4.50	6.20	6.64	7.84	8.77	9.92	10.88	7.51	—
732	3.25	4.50	7.00	8.50	3.54	4.25	7.08	0.25	5.25	6.56	7.00	8.20	9.13	10.28	11.25	8.00	4.94
738	3.75	5.00	8.00	9.50	4.06	4.75	8.12	0.25	5.47	7.06	7.50	8.70	10.28	11.81	12.88	8.78	5.50

Size	M	N	P	Q	R-NEMA Mounting 56C 140TC	R-NEMA Mounting 180TC 210C	S	T Holes	B.C.	Low Speed Shaft +.0015 -.0000	V	W-Key Size	W-Key Length	Approx. Weight(LBS.) HF	Approx. Weight(LBS.) HQC	Fan Kit No.**
713	5.55	2.50	.50	#10-32	3.31	—	.88	11/32	5.000	.625	.68			16	20	—
715	6.16	3.03	.44	#10-32	3.31	—	1.38	11/32	5.000	1.000	.84			22	28	—
718	6.66	3.03	.47	#10-32	3.31	—	1.38	11/32	5.875	1.000	.74	See Page		29	31	—
721	7.47	3.22	.53	1/4-28	3.31	—	1.94	13/32	6.500	1.4375	.87	128 For		36	36	—
724	8.30	3.22	.50	1/4-28	3.31	4.63	1.94	13/32	7.500	1.4375	.75	Key		41	47	—
726	9.25	3.44	.62	5/16-24	3.31	4.63	2.50	13/32	8.000	1.9375	.78	Information		52	52	—
730	10.38	4.19	.31	5/16-24	3.31	4.63	2.88	13/32	8.000	2.1875	1.12			76	80	—
732	10.91	4.31	.94	5/16-24	3.31	4.63	2.88	9/16	10.000	2.1875	.93			95	107	51450
738	11.84	4.81	.66	3/8-24	3.31	4.63	3.25	9/16	11.500	2.4375	1.11			147	150	51451

* See Assemblies and Mounting Positions, Page 18. ** For Fan Kits, see Page 130 . See Page 128 for available bore sizes.
Input may be rotated clockwise or counterclockwise. The "SF" style is recommended for direct replacement only.
†† 42CZ Flange Dimensions: F700 J = 3.16 : QC700 J = 4.15 : RF700 J = 4.76

700 Series Single Reduction Flanged Reducer Dimensions

SF700 Series Flanged Quill Type

Basic Models (No Base), Hollow Output Shaft

FOR ORDERING INFORMATION, see Page 16

FOR ADDITIONAL SIZES, See the H Series Page 40
FOR RATING INFORMATION, See Pages 17, 22-33

ASSEMBLY TYPES*

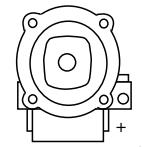

G
STANDARD

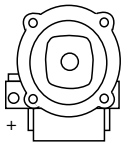

J

+HOLLOW SHAFT SETSCREW ON THIS SIDE.

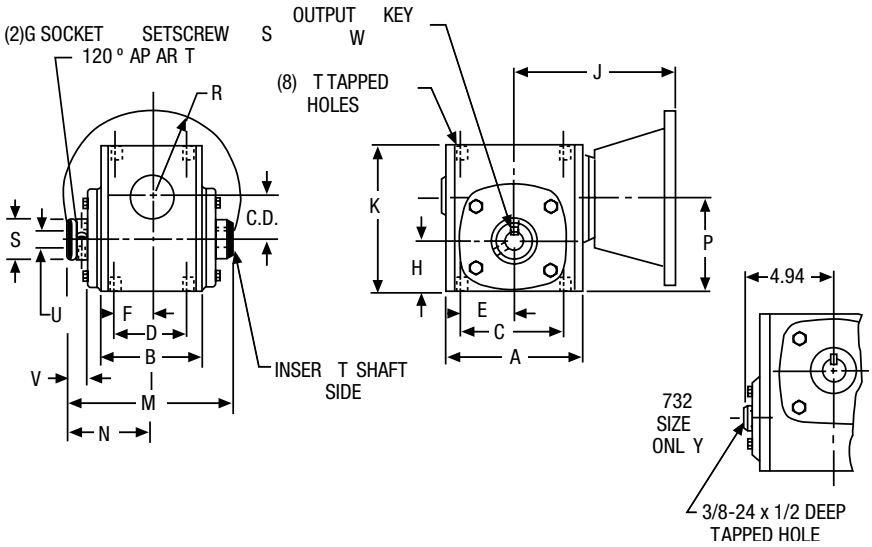

ALL DIMENSIONS IN INCHES

Size	C.D.	A	B	C	D	E	F	G	H	J-NEMA Mounting SF700 56C 140TC	J-NEMA Mounting SF700 180TC 210C	K	M	N
718	1.75	5.50	3.69	4.19	2.75	2.09	1.38	#10-32	2.06	4.69	—	5.75	5.69	3.09
721	2.06	6.00	3.81	5.00	2.88	2.50	1.44	1/4-28	2.28	5.06	—	6.38	5.88	3.22
726	2.62	7.38	4.44	6.38	3.38	3.19	1.69	1/4-28	2.94	5.75	6.19	8.00	6.47	3.50
732	3.25	9.00	5.88	7.50	4.00	3.75	2.00	3/8-24	3.50	6.56	7.00	9.38	8.06	4.38

Size	P	R-NEMA Mounting 56C 140TC	R-NEMA Mounting 180TC 210C	S	T Tap Size	T Depth	Low Speed Shaft U †† +.0015 -.000	Low Speed Shaft V	Low Speed Shaft W-Key Size	Low Speed Shaft W-Key Length	Approx. Weight (LBS.) SF	Fan Kit No.**
718	3.81	3.31	—	1.38	5/16-18	.50	1.000	.78	See Page		23	—
721	4.34	3.31	—	1.50	3/8-16	.56	1.125	.88	128 For		27	—
726	5.56	3.31	4.63	2.16	3/8-16	.56	1.4375	.84	Key Information		51	—
732	6.75	3.31	4.63	2.56	7/16-14	.66	1.9375	1.00			90	51450

** For Fan Kits, see Page 130.
†† For additional output bore diameters, refer to the H Series, Page 128.
* Assemblies define output (slow speed) shaft projection with respect to input (high speed) shaft and mounted surfaces. Input may be rotated clockwise or counterclockwise. See Assemblies and Mounting Positions, Page 18

Reaction Rod Kits

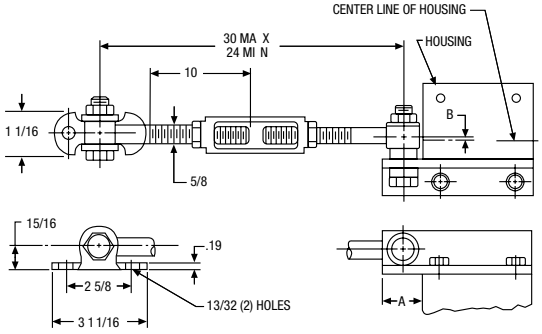

All DIMENSIONS IN INCHES

Size	A	B	Catalog Number	Kit No.
718	1.09	.09	X718-76K	69692
721	1.25	.03	X721-76K	69693
726	1.25	.22	X726-76K	69694
732	1.50	.53	X732-76K	69695

All hardware shown is included in the kits.

SF700 Series Flanged Quill Type

V/W Position Mounting Flange, Hollow Output Shaft

FOR ORDERING INFORMATION, see Page 16

FOR ADDITIONAL SIZES, See the H Series Page 41
FOR RATING INFORMATION, See Pages 17, 22-33

V Position

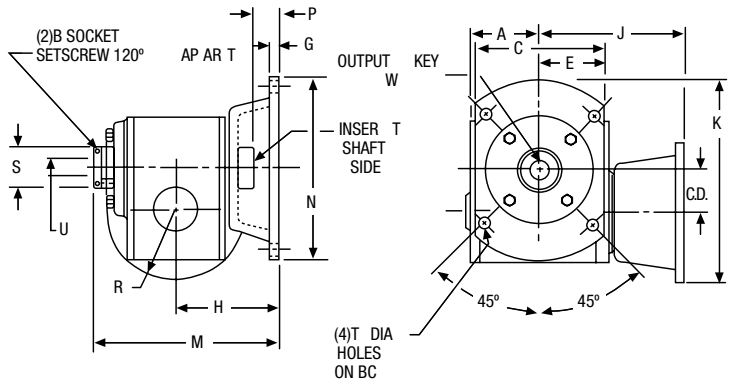

ASSEMBLY TYPES*

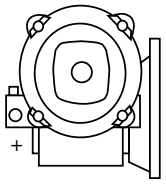

J STANDARD

+HOLLOW SHAFT SETSCREW ON THIS SIDE.

W Position

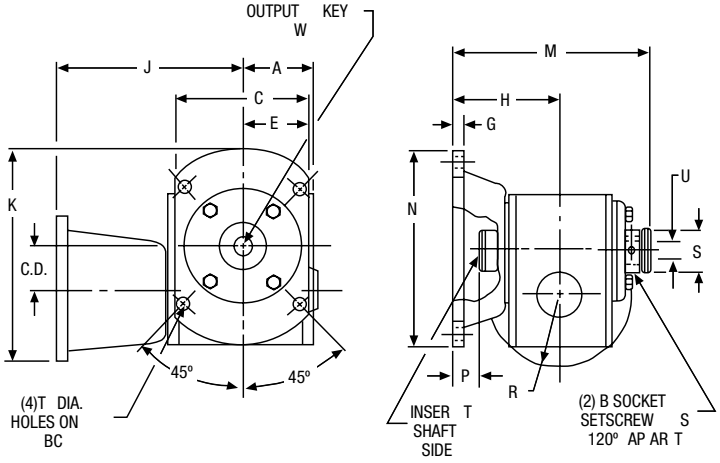

ASSEMBLY TYPES*

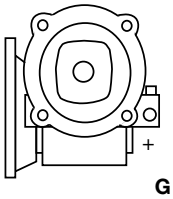

G STANDARD

+HOLLOW SHAFT SETSCREW ON THIS SIDE.

ALL DIMENSIONS IN INCHES

Size	C.D.	A	B	C	BC	E	G	H	J-NEMA Mounting † SF700 56C 140TC	J-NEMA Mounting † SF700 180TC 210C	K
718	1.75	2.75	#10-32	4.88	5.88	2.44	.38	3.50	4.69	—	8.03
721	2.06	3.00	1/4-28	5.75	6.50	2.88	.38	3.75	5.06	—	8.66
726	2.62	3.69	1/4-28	7.75	8.00	3.88	.38	4.06	5.75	6.19	11.69
732	3.25	4.50	3/8-24	9.00	10.00	4.50	.50	5.25	6.56	7.00	13.38

Size	M	N	P	R-NEMA Mounting 56C 140TC	R-NEMA Mounting 180TC 210C	S	T Holes	Low Speed Shaft U +.0015 -.000	Low Speed Shaft W-Key Size	Low Speed Shaft W-Key Length	Approx. Weight (LBS.) SF	Fan Kit No.**
718	6.59	6.75	.91	3.31	—	1.38	11/32	1.000	See Page		28	—
721	6.97	7.38	1.09	3.31	—	1.50	13/32	1.125	128 For		35	—
726	7.56	8.88	1.09	3.31	4.63	2.16	13/32	1.4375	Key Information		69	—
732	9.63	11.00	1.56	3.31	4.63	2.56	9/16	1.9375			119	51450

** For Fan Kits, see Page 130.

* Assemblies define output (slow speed) shaft projection with respect to input (high speed) shaft and mounted surfaces. Input may be rotated clockwise or counterclockwise. See Assemblies and Mounting Positions, Page 18.

† 42CZ Flange Dimensions: F700 J = 3.16 : QC700 J = 4.15 : RF700 J = 4.76

700 Series Single Reduction Non-Flanged Reducer Dimensions

700 Series

Basic Models (No Base)

FOR ORDERING INFORMATION, see Page 16

FOR RATING INFORMATION, See Pages 17, 22-33

ASSEMBLY TYPES*

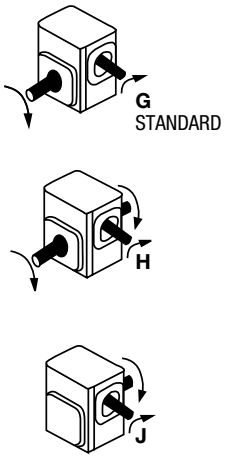

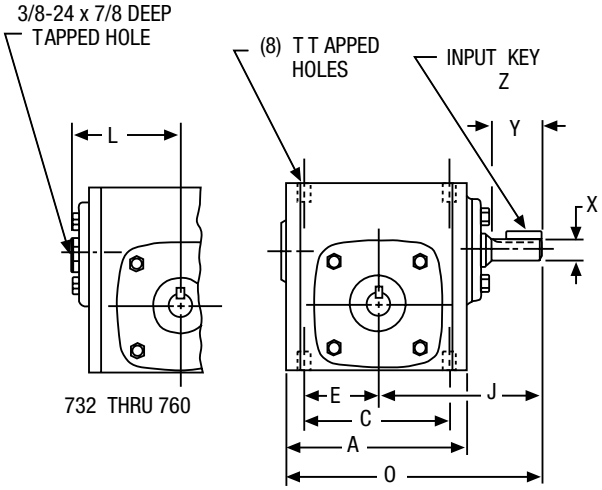

ALL DIMENSIONS IN INCHES

Size	C.D.	A	B	C	D	E	F	H	J	K	L	M	N	O
710	1.00	3.25	2.50	2.63	1.69	1.31	.84	1.31	2.88	3.63	—	4.53	2.88	4.50
713	1.33	4.25	2.88	3.25	2.00	1.63	1.00	1.72	3.91	4.66	—	6.03	4.00	6.03
715	1.54	5.13	3.69	4.19	2.75	2.09	1.38	1.91	4.69	5.38	—	6.84	4.31	7.25
718	1.75	5.50	3.69	4.19	2.75	2.09	1.38	2.06	4.88	5.75	—	6.84	4.31	7.63
721	2.06	6.00	3.81	5.00	2.88	2.50	1.44	2.28	5.13	6.38	—	7.28	4.69	8.13
724	2.38	6.38	4.06	5.00	2.88	2.50	1.44	2.50	5.75	6.94	—	7.81	5.09	8.94
726	2.62	7.38	4.44	6.38	3.38	3.19	1.69	2.94	6.31	8.00	—	8.53	5.63	10.00
730	3.00	8.12	5.25	7.00	4.00	3.50	2.00	3.25	6.88	8.88	—	10.02	6.75	10.94
732	3.25	9.00	5.88	7.50	4.00	3.75	2.00	3.50	7.44	9.38	4.94	10.81	7.06	11.94
738	3.75	10.00	6.38	8.50	4.75	4.25	2.38	3.88	8.38	10.44	5.50	11.88	7.75	13.38
752	5.16	13.13	7.38	11.00	5.81	5.50	2.91	5.31	10.69	13.75	7.19	13.81	9.06	17.25
760	6.00	14.50	8.13	12.75	6.38	6.13	3.19	6.50	11.75	16.50	7.94	15.31	10.00	19.00

Size	T		Low Speed Shaft				High Speed Shaft				Approx. Weight (LBS.)	Fan Kit No.**
	Tap Size	Depth	U +.000 -.001	V	W-Key Sq.	W-Key Lengh	X +.000 -.001	Y	Z-Key Sq.	Z-Key Length		
710	1/4-20	.44	.500	1.19	1/8	5/8	.3745	.81	3/32	3/8	6	—
713	5/16-18	.50	.625	2.00	3/16	1	.4995	1.31	1/8	5/8	11	—
715	5/16-18	.50	.750	1.78	3/16	1	.6245	1.56	3/16	13/16	18	—
718	5/16-18	.50	.875	1.78	3/16	1	.6245	1.56	3/16	13/16	20	—
721	3/8-16	.56	1.000	2.09	1/4	1-1/4	.6245	1.56	3/16	13/16	25	—
724	3/8-16	.56	1.125	2.37	1/4	1-1/4	.7495	2.00	3/16	1	31	—
726	3/8-16	.56	1.125	2.62	1/4	1-15/16	.7495	2.00	3/16	1	43	—
730	7/16-14	.88	1.250	3.25	1/4	2-1/4	.8745	2.24	3/16	1	57	—
732	7/16-14	.66	1.375	3.25	5/16	2-7/16	.8745	2.34	3/16	1	72	51450
738	1/2-13	.81	1.625	3.50	3/8	2-1/4	.9995	2.75	1/4	1-1/4	105	51451
752	5/8-11	1.00	2.000	4.16	1/2	2-15/16	1.2495	3.25	1/4	1-1/4	198	51452
760	5/8-11	1.00	2.250	4.56	1/2	3-3/8	1.4995	3.88	3/8	3	240	51453

* See Assemblies and Mounting Positions, Page 19.
** For Fan Kits, see Page 130.

700 Series
B Position Horizontal Base

FOR ORDERING INFORMATION, see Page 16

FOR RATING INFORMATION, See Pages 17, 22-33

A

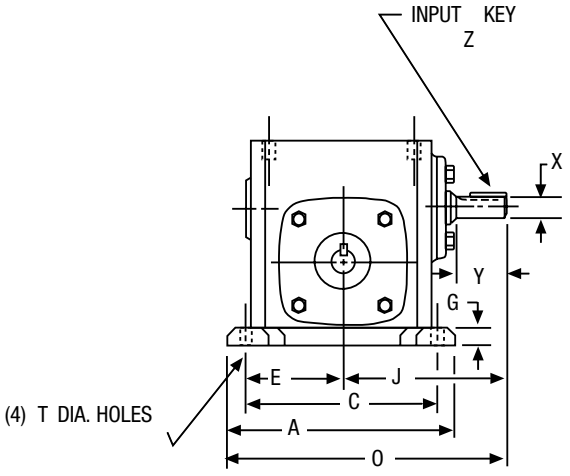

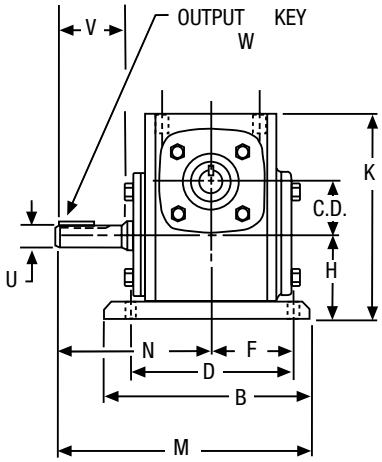

ASSEMBLY TYPES*

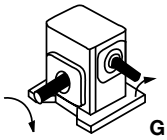

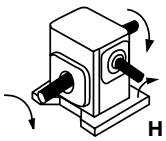

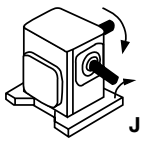

ALL DIMENSIONS IN INCHES

Size	C.D.	A	B	C	D	E	F	G	H	J	K	M	N	O
710	1.00	4.63	3.69	3.75	2.88	1.88	1.44	0.44	1.75	2.88	4.06	4.72	2.88	5.19
713	1.33	5.38	4.19	4.38	3.31	2.19	1.66	0.53	2.25	3.91	5.19	6.09	4.00	6.59
715	1.54	6.44	5.44	5.25	4.31	2.63	2.16	0.59	2.50	4.69	5.97	7.03	4.31	7.91
718	1.75	7.00	5.69	5.75	4.50	2.88	2.25	0.69	2.75	4.88	6.44	7.16	4.31	8.38
721	2.06	7.75	5.94	6.38	4.69	3.19	2.34	0.72	3.00	5.13	7.09	7.66	4.69	9.00
724	2.38	8.50	6.19	7.06	4.88	3.53	2.44	0.75	3.25	5.75	7.69	8.19	5.09	10.00
726	2.62	9.63	6.66	8.00	5.25	4.00	2.63	0.75	3.69	6.31	8.75	8.97	5.63	11.13
730	3.00	10.00	7.50	8.44	5.88	4.22	2.94	0.75	4.00	6.81	9.63	10.50	6.75	11.88
732	3.25	11.19	7.66	9.50	6.13	4.75	3.06	0.88	4.38	7.44	10.25	10.94	7.06	13.03
738	3.75	12.13	8.66	10.38	7.00	5.19	3.50	0.94	4.81	8.38	11.38	12.09	7.75	14.44
752	5.16	16.38	10.63	14.13	8.38	7.06	4.19	1.13	6.44	10.69	14.88	14.38	9.06	18.88
760	6.00	19.00	12.00	16.50	9.50	8.25	4.75	1.25	7.75	11.75	17.75	16.00	10.00	21.25

Size	T	Low Speed Shaft				High Speed Shaft				Approx. Weight (LBS.)	Base Kit No. †	Fan Kit No.**
		U +.000 -.001	V	W-Key		X +.000 -.001	Y	Z-Key				
				Sq.	Lengh			Sq.	Length			
710	11/32	.500	1.19	1/8	5/8	.3745	.81	3/32	3/8	7	56575	—
713	11/32	.625	2.00	3/16	1	.4995	1.31	1/8	5/8	12	56577	—
715	13/32	.750	1.78	3/16	1	.6245	1.56	3/16	13/16	19	56438	—
718	13/32	.875	1.78	3/16	1	.6245	1.56	3/16	13/16	21	56585	—
721	15/32	1.000	2.09	1/4	1-1/4	.6245	1.56	3/16	13/16	26	56440	—
724	15/32	1.125	2.37	1/4	1-1/4	.7495	2.00	3/16	1	32	56591	—
726	17/32	1.125	2.62	1/4	1-15/16	.7495	2.00	3/16	1	46	56595	—
730	17/32	1.250	3.25	1/4	2-1/4	.8745	2.24	3/16	1	64	65544	—
732	17/32	1.375	3.25	5/16	2-7/16	.8745	2.31	3/16	1	81	56599	51450
738	19/32	1.625	3.50	3/8	2-1/4	.9995	2.75	1/4	1-1/4	115	56603	51451
752	25/32	2.000	4.16	1/2	2-15/16	1.2495	3.25	1/4	1-1/4	212	56607	51452
760	29/32	2.250	4.56	1/2	3-3/8	1.4995	3.88	3/8	3	260	56610	51453

* See Assemblies and Mounting Positions, Page 19.
** For Fan Kits, see Page 130.
† For Base Kits, see Page 129.

700 Series Single Reduction Non-Flanged Reducer Dimensions

700 Series

A Position Horizontal Base

A

FOR ORDERING INFORMATION, see Page 16

FOR RATING INFORMATION, See Pages 17, 22-33

ASSEMBLY TYPES*

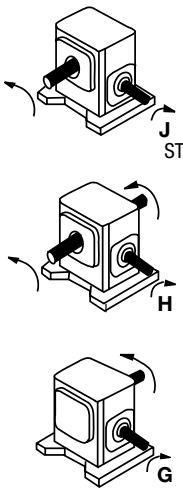

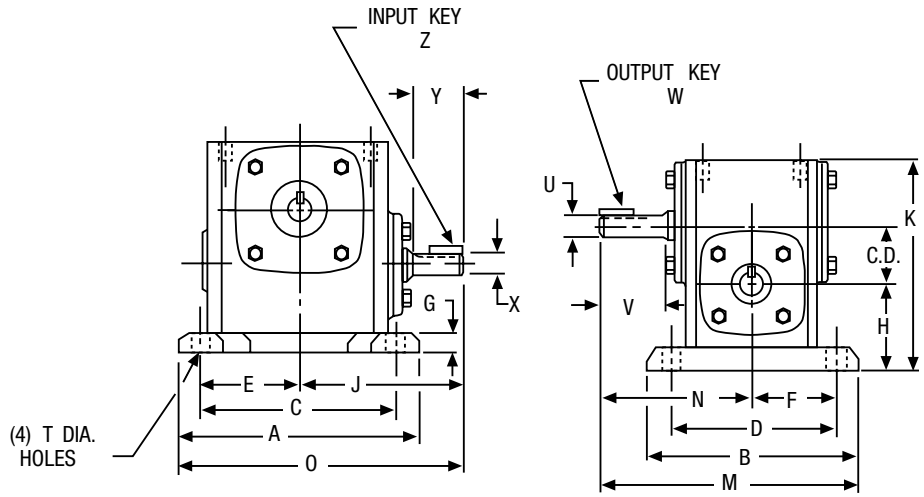

ALL DIMENSIONS IN INCHES

Size	C.D.	A	B	C	D	E	F	G	H	J	K	M	N	O
710	1.00	4.63	3.69	3.75	2.88	1.88	1.44	.44	1.75	2.88	4.06	4.72	2.88	5.19
713	1.33	5.38	4.19	4.38	3.31	2.19	1.66	.53	2.13	3.91	5.19	6.09	4.00	6.59
715	1.54	6.44	5.44	5.25	4.31	2.63	2.16	.59	2.50	4.69	5.97	7.03	4.31	7.91
718	1.75	7.00	5.69	5.75	4.50	2.88	2.25	.69	2.63	4.88	6.44	7.16	4.31	8.38
721	2.06	7.75	5.94	6.38	4.69	3.19	2.34	.72	2.75	5.13	7.09	7.66	4.69	9.00
724	2.38	8.50	6.19	7.06	4.88	3.53	2.44	.75	2.81	5.75	7.69	8.19	5.09	10.00
726	2.62	9.63	6.66	8.00	5.25	4.00	2.63	.75	3.19	6.31	8.75	8.97	5.63	11.13
730	3.00	10.00	7.50	8.44	5.88	4.22	2.94	.75	3.38	6.81	9.63	10.50	6.75	11.88
732	3.25	11.19	7.66	9.50	6.13	4.75	3.06	.88	3.50	7.44	10.25	10.94	7.06	13.03
738	3.75	12.13	8.66	10.38	7.00	5.19	3.50	.94	3.75	8.38	11.38	12.09	7.75	14.44
752	5.16	16.38	10.63	14.13	8.38	7.06	4.19	1.13	4.38	10.69	14.88	14.38	9.06	18.88
760	6.00	19.00	12.00	16.50	9.50	8.25	4.75	1.25	5.25	11.75	17.75	16.00	10.00	21.25

Size	T	Low Speed Shaft				High Speed Shaft				Approx. Weight (LBS.)	Base Kit No. †	Fan Kit No.**
		U +.000 -.001	V	W-Key		X +.000 -.001	Y	Z-Key				
				Sq.	Lengh			Sq.	Length			
710	11/32	.500	1.19	1/8	5/8	.3745	.81	3/32	3/8	7	56575	—
713	11/32	.625	2.00	3/16	1	.4995	1.31	1/8	5/8	12	56577	—
715	13/32	.750	1.78	3/16	1	.6245	1.56	3/16	13/16	19	56438	—
718	13/32	.875	1.78	3/16	1	.6245	1.56	3/16	13/16	21	56585	—
721	15/32	1.000	2.09	1/4	1-1/4	.6245	1.56	3/16	13/16	26	56440	—
724	15/32	1.125	2.37	1/4	1-1/4	.7495	2.00	3/16	1	32	56591	—
726	17/32	1.125	2.62	1/4	1-15/16	.7495	2.00	3/16	1	46	56595	—
730	17/32	1.250	3.25	1/4	2-1/4	.8745	2.24	3/16	1	64	65544	—
732	17/32	1.375	3.25	5/16	2-7/16	.8745	2.31	3/16	1	81	56599	51450
738	19/32	1.625	3.50	3/8	2-1/4	.9995	2.75	1/4	1-1/4	115	56603	51451
752	25/32	2.000	4.16	1/2	2-15/16	1.2495	3.25	1/4	1-1/4	212	56607	51452
760	29/32	2.250	4.56	1/2	3-3/8	1.4995	3.88	3/8	3	260	56610	51453

* See Assemblies and Mounting Positions, Page 19.
** For Fan Kits, see Page 130.
† For Base Kits, see Page 129.

700 Series Single Reduction Non-Flanged Reducer Dimensions

700 Series

C/D Position Vertical Base; C/E High Base; D/F Low Base

FOR ORDERING INFORMATION, see Page 16

FOR RATING INFORMATION, See Pages 17, 22-33

A

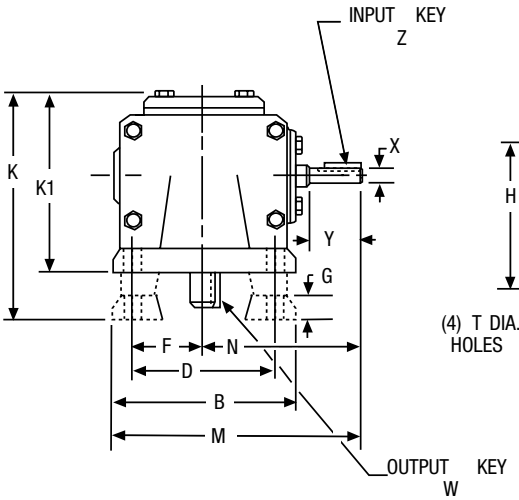

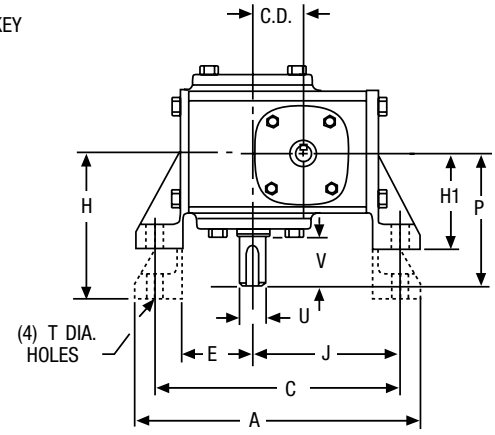

ASSEMBLY TYPES*

C/D BASES **E/F BASES**

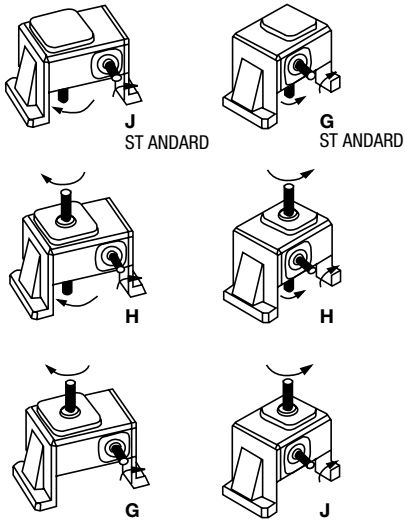

ALL DIMENSIONS IN INCHES

Size	C.D.	A	B	C	D	E	F	G	H	H1	J	K	K1	M	N	P
710	1.00	6.06	3.22	5.13	2.31	1.38	1.16	.44	2.94	—	3.06	4.59	—	4.50	2.88	2.88
713	1.33	7.09	4.13	6.16	3.25	1.78	1.63	.53	3.56	2.31	3.69	5.59	4.34	6.03	3.91	4.00
715	1.54	8.03	5.16	6.97	4.00	1.97	2.00	.69	4.38	3.00	4.25	6.88	5.50	7.28	4.69	4.31
718	1.75	8.44	5.16	7.38	4.00	2.13	2.00	.69	4.38	3.00	4.50	6.88	5.53	7.63	4.88	4.31
721	2.06	9.50	6.03	8.38	4.88	2.34	2.44	.72	4.88	3.13	5.09	7.50	5.75	8.16	5.13	4.69
724	2.38	10.06	6.31	8.94	4.88	2.56	2.44	.75	5.25	3.38	5.44	7.97	6.09	8.94	5.75	5.09
726	2.62	11.69	7.38	10.13	5.75	3.00	2.88	.88	5.59	3.63	6.13	8.50	6.53	10.00	6.31	5.63
730	3.00	12.52	8.00	11.13	6.00	3.34	3.00	.94	5.88	3.94	6.75	9.15	7.18	10.88	6.88	6.75
732	3.25	13.38	9.00	11.88	6.13	3.56	3.06	.88	6.25	4.69	7.13	10.00	8.44	11.94	7.44	7.06
738	3.75	15.69	10.00	13.94	8.00	4.00	4.00	.94	7.00	5.25	8.31	11.12	9.38	13.38	8.38	7.75
752	5.16	20.56	13.13	18.00	10.00	5.44	5.00	1.13	8.63	6.38	10.56	13.38	11.13	17.25	10.69	9.06
760	6.00	23.25	14.75	20.88	11.75	6.63	5.88	1.13	9.63	7.31	12.19	14.94	12.62	19.13	11.75	10.00

		Low Speed Shaft				High Speed Shaft				High Base		Low Base		
		U		W-Key		X		Z-Key		Approx.	Base	Approx.	Base	Fan
Size	T	+.000 -.001	V	Sq.	Lengh	+.000 -.001	Y	Sq.	Length	Weight (LBS.)	Kit No. †	Weight (LBS.)	Kit No. †	Kit No.**
710	11/32	.500	1.19	1/8	5/8	.3745	.81	3/32	3/8	7	56576	—	—	—
713	11/32	.625	2.00	3/16	1	.4995	1.31	1/8	5/8	13	56578	12	56579	—
715	13/32	.750	1.78	3/16	1	.6245	1.56	3/16	13/16	21	56582	20	56583	—
718	13/32	.875	1.78	3/16	1	.6245	1.56	3/16	13/16	23	56582	22	56583	—
721	15/32	1.000	2.09	1/4	1-1/4	.6245	1.56	3/16	13/16	28	56588	25	56589	—
724	15/32	1.125	2.38	1/4	1-1/4	.7495	2.00	3/16	1	37	56592	35	56593	—
726	17/32	1.125	2.63	1/4	1-15/16	.7495	2.00	3/16	1	51	56596	49	56597	—
730	17/32	1.250	3.25	1/4	2-1/4	.8745	2.24	3/16	1	67	65545	65	65546	—
732	17/32	1.375	3.25	5/16	2-7/16	.8745	2.31	3/16	1	83	56600	81	56601	51450
738	19/32	1.625	3.50	3/8	2-1/4	.9995	2.75	1/4	1-1/4	143	56604	133	56605	51451
752	25/32	2.000	4.16	1/2	2-15/16	1.2495	3.25	1/4	1-1/4	238	56608	226	56609	51452
760	29/32	2.250	4.56	1/2	3-3/8	1.4995	3.88	3/8	3	259	56611	275	56612	51453

* See Assemblies and Mounting Positions, Page 19.
** For Fan Kits, see Page 130.
† For Base Kits, see Page 129.

700 Series Single Reduction Non-Flanged Reducer Dimensions

700 Series

X/Y Position Vertical Base; X = Input Vertical Up, Y = Input Vertical Down

FOR ORDERING INFORMATION, see Page 16

FOR RATING INFORMATION, See Pages 15, 20-31

A

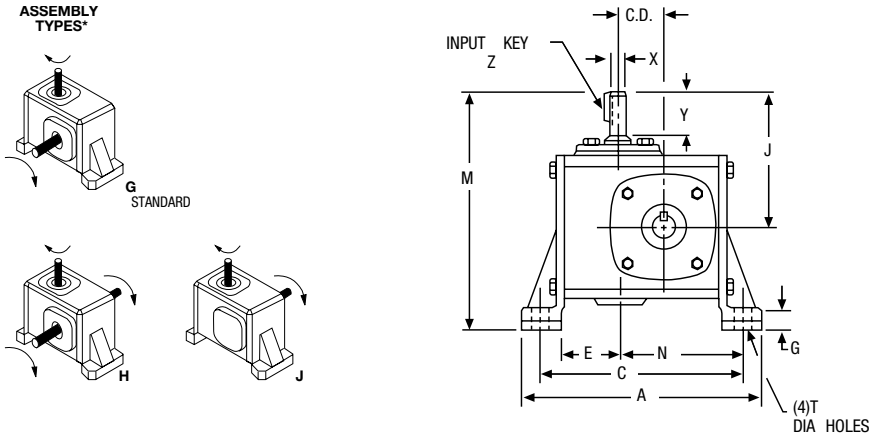

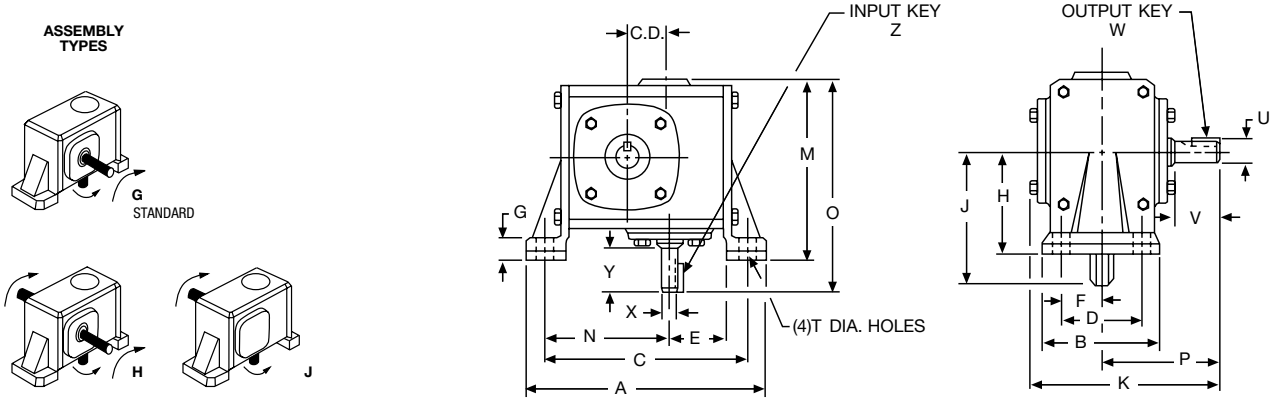

ALL DIMENSIONS IN INCHES

Size	C.D.	A	B	C	D	E	F	G	H	J	K	M X Models	M Y Models	N
713	1.33	7.28	2.91	6.41	2.00	1.70	1.00	.53	2.94	3.91	6.03	6.84	5.06	3.92
715	1.54	8.25	3.72	7.25	2.50	2.00	1.25	.69	3.50	4.69	6.84	8.19	6.06	4.38
718	1.75	8.62	3.72	7.62	2.50	2.00	1.25	.69	3.50	4.87	6.81	8.37	6.25	4.75
721	2.06	9.75	3.84	8.62	2.62	2.09	1.31	.72	3.94	5.12	7.28	9.06	6.94	5.47
724	2.38	10.31	4.12	9.19	2.87	2.12	1.44	.75	4.06	5.75	7.81	9.81	7.25	6.00
726	2.62	11.88	4.53	10.37	3.12	2.50	1.56	.87	4.75	6.31	8.53	11.06	8.44	6.75

Size	O	P	T	Low Speed Shaft U +.000 -.001	V	W-Key Sq.	W-Key Length	High Speed Shaft X +.000 -.001	Y	Z-Key Sq.	Z-Key Length	Approx. Weight (LBS.)	Base Kit No.†
713	6.03	4.00	11/32	.625	2.00	3/16	1	.4995	1.31	1/8	5/8	14	55196
715	7.25	4.31	13/32	.750	1.78	3/16	1	.6245	1.56	3/16	13/16	21	55349
718	7.63	4.31	13/32	.875	1.78	3/16	1	.6245	1.56	3/16	13/16	23	55349
721	8.13	4.69	15/32	1.000	2.09	1/4	1-1/4	.6245	1.56	3/16	13/16	28	55644
724	8.94	5.09	15/32	1.125	2.37	1/4	1-1/4	.7495	2.00	3/16	1	37	55768
726	10.00	5.62	17/32	1.125	2.62	1/4	1-15/16	.7495	2.00	3/16	1	51	55769

* See Assemblies and Mounting Positions, Page 19.

† For Base Kits, see Page 129.

H700 Series

Basic Models (No Base); Bored to Size, Hollow Output Shaft

FOR ORDERING INFORMATION, see Page 16

FOR RATING INFORMATION, See Pages 15, 20-31

A

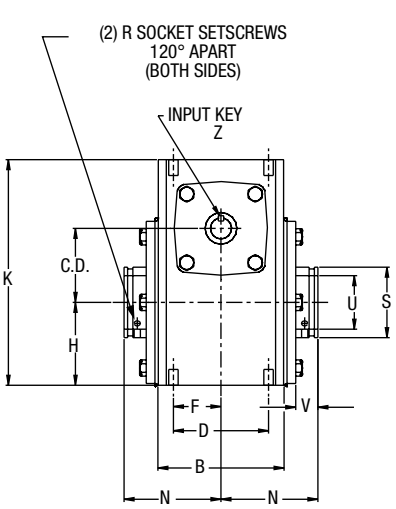

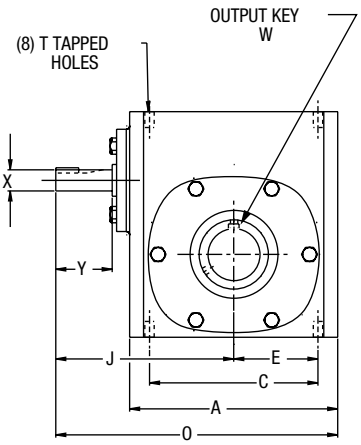

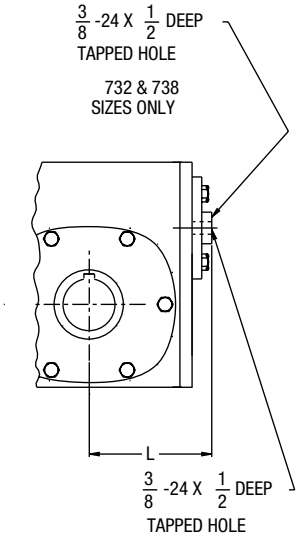

ASSEMBLY TYPES*

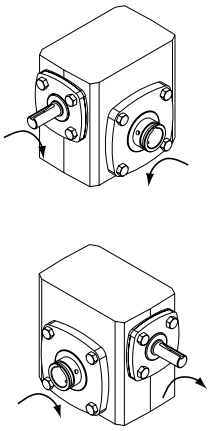

ALL DIMENSIONS IN INCHES

Size	C.D.	A	B	C	D	E	F	H	J	K	L	N	O	R	S
713	1.33	4.25	2.88	3.25	2.00	1.63	1.00	1.72	3.91	4.66	—	2.50	6.03	#10-32	.88
715	1.54	5.13	3.69	4.19	2.75	2.09	1.38	1.91	4.69	5.38	—	3.03	7.25	#10-32	1.38
718	1.75	5.50	3.69	4.19	2.75	2.09	1.38	2.06	4.88	5.75	—	3.03	7.63	#10-32	1.38
721	2.06	6.00	3.81	5.00	2.88	2.50	1.44	2.28	5.13	6.38	—	3.22	8.13	1/4-28	1.94
724	2.38	6.38	4.06	5.00	2.88	2.50	1.44	2.50	5.75	6.94	—	3.22	8.94	1/4-28	1.94
726	2.62	7.38	4.44	6.38	3.38	3.19	1.69	2.94	6.31	8.00	—	3.44	10.00	5/16-24	2.50
730	3.00	8.12	5.25	7.00	4.00	3.50	2.00	3.25	6.88	8.88	—	4.19	10.94	5/16-24	2.88
732	3.25	9.00	5.88	7.50	4.00	3.75	2.00	3.50	7.44	9.38	4.94	4.31	11.94	5/16-24	2.88
738	3.75	10.00	6.38	8.50	4.75	4.25	2.38	3.88	8.38	10.44	5.50	4.81	13.38	5/16-24	3.25
752	5.16	13.13	7.38	11	5.81	5.5	2.91	5.31	10.69	13.75	7.19	6.12	17.25	3/1/24	4.25

Size	T		Low Speed Shaft				High Speed Shaft				Approx. Weight (LBS.)	Fan Kit No.**
	Tap Size	Depth	Max U +.0015 -.0000	V	W - Key Sq.	W - Key Length	X +.000 -.001	Y	Z - Key Sq.	Z - Key Length		
713	5/16-18	.50	.625	.68			.4995	1.31	1/8	5/8	12	—
715	5/16-18	.50	1.000	.74			.6245	1.56	3/16	13/16	19	—
718	5/16-18	.50	1.000	.74			.6245	1.56	3/16	13/16	21	—
721	3/8-16	.56	1.4375	.87	See Page		.6245	1.56	3/16	13/16	26	—
724	3/8-16	.56	1.4375	.75	128 For		.7495	2.00	3/16	1	33	—
726	3/8-16	.56	1.9375	.78	Key Information		.7495	2.00	3/16	1	45	—
730	7/16-14	.88	2.1875	1.10			.8745	2.24	3/16	1	60	—
732	7/16-14	.66	2.1875	.93			.8745	2.31	3/16	1	76	51450
738	1/2-13	.81	2.4375	1.11			.9995	2.75	1/4	1-1/4	110	51451
752	5/8-11	1	3.4375	1.37			1.2495	3.25	4-Jan	1-1/4	198	51452

* See Assemblies and Mounting Positions, Page 19.
** For Fan Kits, see Page 130.
See Page 128 for available bore sizes.
Input may be rotated clockwise or counterclockwise. Arrows indicate relative rotation.

700 Series Single Reduction Non-Flanged Reducer Dimensions

H700 Series

R/L Position Mounting Bracket; Hollow Output Shaft

FOR ORDERING INFORMATION, see Page 16

FOR RATING INFORMATION, See Pages 17, 22-33

ASSEMBLY TYPES*

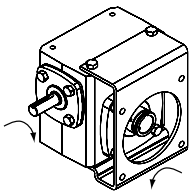

R Position

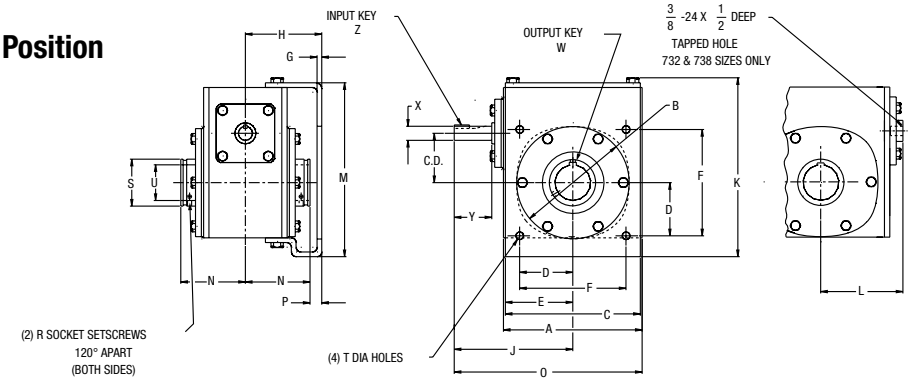

L Position

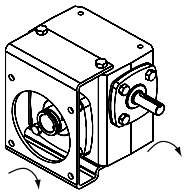

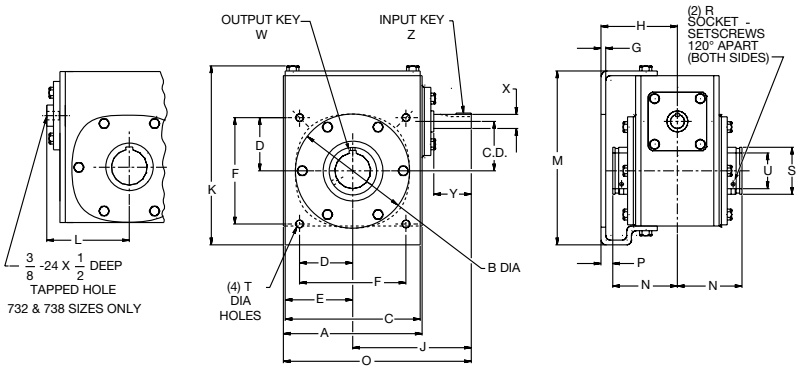

ALL DIMENSIONS IN INCHES

Size	C.D.	A	B	C	D	E	F	G	H	J	K	L	M	N	O	P
713	1.33	4.25	3.62	4.25	1.77	2.12	3.54	.19	3.00	3.91	5.72	—	5.55	2.50	6.03	.50
715	1.54	5.13	3.62	4.75	1.77	2.38	3.54	.19	3.56	4.69	6.40	—	6.16	3.03	7.25	.44
718	1.75	5.50	4.06	5.00	2.08	2.41	4.16	.19	3.50	4.88	6.89	—	6.66	3.03	7.63	.47
721	2.06	6.00	4.50	5.92	2.30	2.96	4.60	.25	3.75	5.13	7.74	—	7.47	3.22	8.13	.53
724	2.38	6.38	5.00	5.75	2.65	2.88	5.30	.25	3.72	5.75	8.57	—	8.30	3.22	8.94	.50
726	2.62	7.38	6.00	7.18	2.83	3.59	5.66	.25	4.06	6.31	9.52	—	9.25	3.44	10.00	.62
730	3.00	8.12	7.00	8.00	3.18	4.00	6.36	.25	4.50	6.88	10.75	—	10.38	4.19	10.94	.31
732	3.25	9.00	7.00	8.50	3.54	4.25	7.08	.25	5.25	7.44	11.22	4.94	10.91	4.31	11.94	.94
738	3.75	10.00	8.00	9.50	4.06	4.75	8.12	.25	5.47	8.38	12.21	5.50	11.84	4.81	13.38	.66

Size	R	S	T Holes	Low Speed Shaft			High Speed Shaft				Approx. Weight (LBS.)	Fan Kit No.**
				Max U +.0015 -.0000	W-Key		X +.000 -.001	Y	Z-Key			
					Sq.	LENGTH			Sq.	Length		
713	#10-32	.88	11/32	.625			.4995	1.31	1/8	5/8	14	—
715	#10-32	1.38	11/32	1.000			.6245	1.56	3/16	13/16	22	—
718	#10-32	1.38	11/32	1.000			.6245	1.56	3/16	13/16	25	—
721	1/4-28	1.94	13/32	1.4375	See Page		.6245	1.56	3/16	13/16	29	—
724	1/4-28	1.94	13/32	1.4375	128 For		.7495	2.00	3/16	1	40	—
726	5/16-24	2.50	13/32	1.9375	Key Information		.7495	2.00	3/16	1	54	—
730	5/16-24	2.88	13/32	2.1875			.8745	2.24	3/16	1	67	—
732	5/16-24	2.88	9/16	2.1875			.8745	2.31	3/16	1	89	51450
738	3/8-24	3.25	9/16	2.4375			.9995	2.75	1/4	1-1/4	132	51451

* See Assemblies and Mounting Positions, Page 19.

** For Fan Kits, see Page 130. See Page 128 for available bore sizes.

Input may be rotated clockwise or counterclockwise. Arrows indicate relative rotation.

S700 Series

Basic Models (No Base); Hollow Output Shaft

FOR ADDITIONAL SIZES, See the H Series Page 49
FOR ORDERING INFORMATION, see Page 16
FOR RATING INFORMATION, See Pages 17, 22-33

A

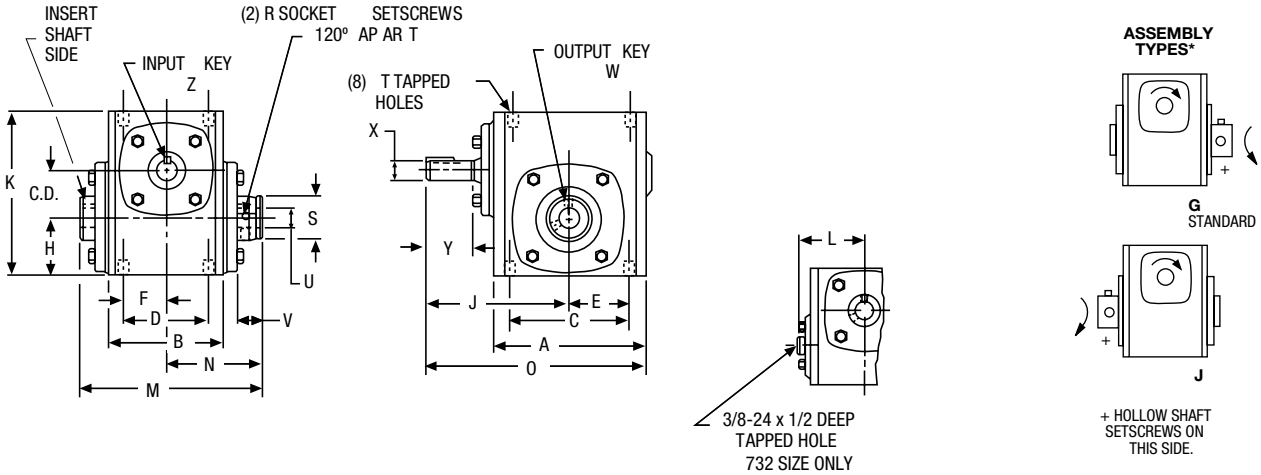

ALL DIMENSIONS IN INCHES

Size	C.D.	A	B	C	D	E	F	H	J	K	M	N	O	R	S
718	1.75	5.50	3.69	4.19	2.75	2.09	1.38	2.06	4.88	5.75	5.69	3.09	7.63	#10-32	1.38
721	2.06	6.00	3.81	5.00	2.88	2.50	1.44	2.28	5.13	6.38	5.88	3.22	8.13	1/4-28	1.50
726	2.62	7.38	4.44	6.38	3.38	3.19	1.69	2.94	6.31	8.00	6.47	3.50	10.00	1/4-28	2.16
732	3.25	9.00	5.88	7.50	4.00	3.75	2.00	3.50	7.44	9.38	8.06	4.38	11.94	5/16-24	2.56

Size	T		Low Speed Shaft				High Speed Shaft				Approx. Weight (LBS.)	Fan Kit No.**
	Tap Size	Depth	U †† +.0015 -.001	V	W - Key Sq.	W - Key Length	X +.000 -.001	Y	Z - Key Sq.	Z - Key Length		
718	5/16-18	.50	1.000	.78	See Page		.6245	1.56	3/16	13/16	19	—
721	3/8-16	.56	1.125	.88	128 For		.6245	1.56	3/16	13/16	23	—
726	3/8-16	.56	1.4375	.84	Key Information		.7495	2.00	3/16	1	40	—
732	7/16-14	.66	1.9375	1.00			.8745	2.31	3/16	1	72	51450

* See Assemblies and mounting Positions, Page 19. Assemblies define output (slow speed) shaft projection with respect to input (high speed) shaft and mounted surfaces,viewed from end of input shaft. Input may be rotated clockwise or counterclockwise. Arrows indicate relative rotation.
** For Fan Kits, see Page 130.
††For additional Output Bore Diameters, refer to the H Series, Page 128.

Reaction Rod Kits

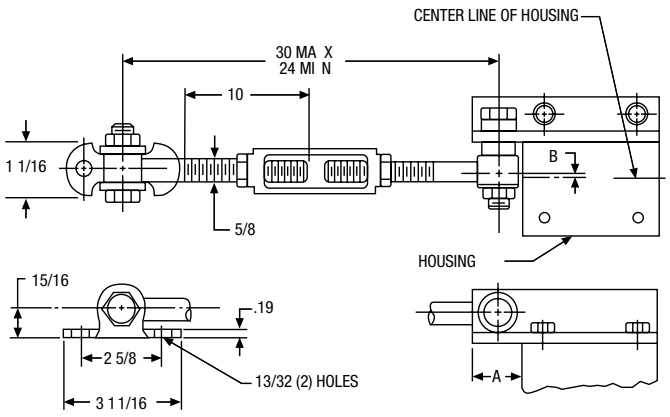

ALL DIMENSIONS IN INCHES

Size	A	B	Catalog Number	Kit No.
S718	1.09	.09	X718-76K	69692
S721	1.25	.03	X721-76K	69693
S726	1.25	.22	X726-76K	69694
S732	1.50	.53	X732-76K	69695

All hardware shown is included in the kits.

700 Series Single Reduction Non-Flanged Reducer Dimensions

S700 Series

V/W Position Mounting Flange; Hollow Output Shaft

FOR ORDERING INFORMATION, see Page 16

FOR ADDITIONAL SIZES, See the H Series Page 49

FOR RATING INFORMATION, See Pages 17, 22-33

A

ASSEMBLY TYPES*

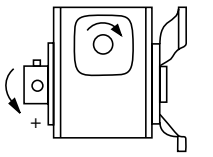

J STANDARD

+ HOLLOW SHAFT SETSCREWS ON THIS SIDE.

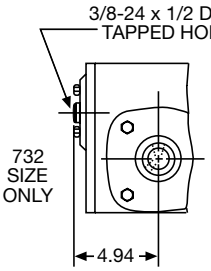

V Position

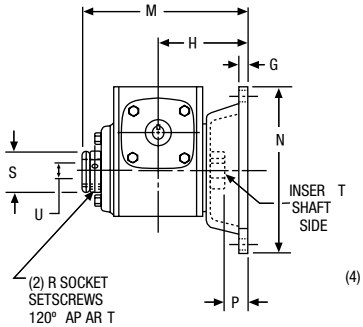

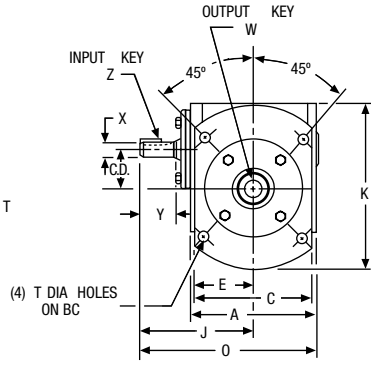

W Position

ASSEMBLY TYPES*

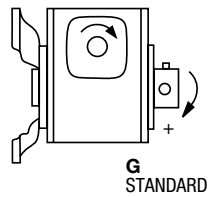

G STANDARD

+ HOLLOW SHAFT SETSCREWS ON THIS SIDE

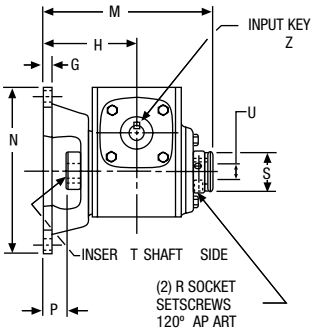

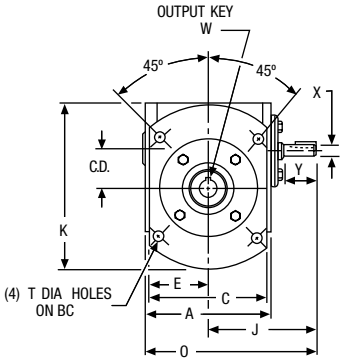

ALL DIMENSIONS IN INCHES

Size	C.D.	A	BC	C	E	G	H	J	K	M	N	O	P
718	1.75	5.50	5.88	4.88	2.44	.38	3.50	4.88	7.06	6.59	6.75	7.63	.91
721	2.06	6.00	6.50	5.75	2.88	.38	3.75	5.13	7.28	6.97	7.38	8.13	1.09
726	2.62	7.38	8.00	7.75	3.88	.38	4.06	6.31	9.50	7.56	8.88	10.19	1.09
732	3.25	9.00	10.00	9.00	4.50	.50	5.25	7.44	11.38	9.63	11.00	11.94	1.56

Size	R	S	T Holes	Low Speed Shaft			High Speed Shaft				Approx. Weight (LBS.)	Fan Kit No.**
				U +.0015 -.0000	W-Key		X +.000 -.001	Y	Z-Key			
					Sq.	LENGTH			Sq.	Length		
718	#10-32	1.38	11/32	1.000	See Page		.6245	1.56	3/16	13/16	24	—
721	1/4-28	1.50	13/32	1.125	128 For		.6245	1.56	3/16	13/16	28	—
726	1/4-28	2.16	13/32	1.4375	Key Information		.7495	2.00	3/16	1	51	—
732	5/16-24	2.56	9/16	1.9375			.8745	2.31	3/16	1	85	51450

* Assemblies define output (slow speed) shaft projection with respect to input (high speed) shaft and mounted surfaces, viewed from end of input shaft. Input may be rotated clockwise or counterclockwise. Arrows indicate relative rotation. See Assemblies and Mounting Positions, Page 19.

** For Fan Kits, see Page 130.

SSF700/SSQC/SSHF700 Series

Basic Models (No Base)

FOR ORDERING INFORMATION, see Page 16
FOR RATING INFORMATION, See Pages 17, 22-33

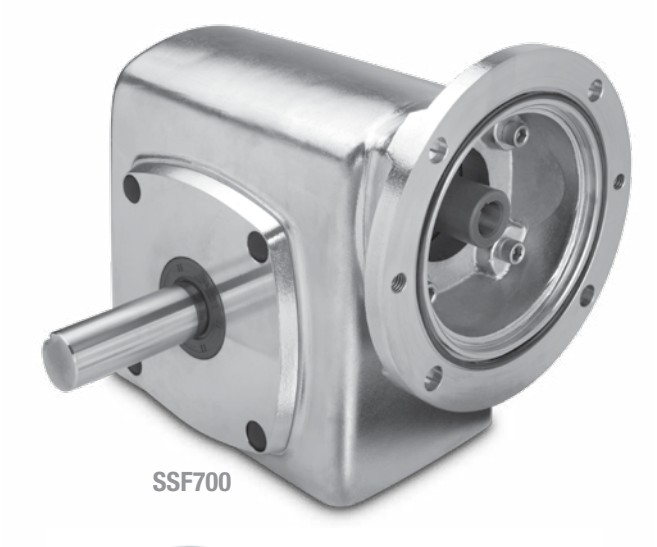

SSF700



SSHF700



SSHQC700

APPLICATIONS:

- Washdown
- Food Processing
- Chemical Processing
- Pharmaceutical Industry

STANDARD FEATURES:

- The original Domed Crown™ Design
- NSF International certified
- Housings, bearing carriers, and flanges are made from 316 cast stainless steel to withstand hostile environments
- 303 stainless steel output shaft
- All stainless steel hardware
- Motor Flange “O” ring sealed
- Flange features two jack screw holes for easy motor removal
- Double lip shaft seals for superior performance in hostile environments
- This is a specially designed internal pressure equalization system which allows the gearbox to operate in all environments without the use of conventional pressure vents
- Lubricated for life with Klubersynth UH1 6-460 synthetic oil for wide temperature ranges, maximum efficiency and long maintenance-free operation
- Oil filled for all mounting positions
- Laser marked nameplate
- Optional high pressure/wash down seals available

Ordering Information

A

Single Reduction Worm Speed Reducer

Example: SSHF732B-30KT-B7-HS1-P20-KUTFSS-3

SS – Stainless Steel Material

H – Style
- Blank – Solid Output Shaft
- H – *BostMount* Hollow Output

F – Quill Style Motor Flange
- QC – Quick Connect Motor Flange (Close Coupled)

7 – 700 Series

32 – Center Distance (Inches)
- 13 – 1.33
- 15 – 1.54
- 18 – 1.75
- 21 – 2.06
- 24 – 2.38
- 26 – 2.62
- 32 – 3.25

B – Base
- Blank – No Base
- B – Horizontal Base
- V – Output Flange - Right Mount
- W – Output Flange - Left Mount

–

30 – Reduction Ratio To 1
5, 10, 15, 20, 25, 30, 40, 50, 60, 80, 100

K – Lubrication
- Blank – No Lubrication
- K – Klubersynth UH1-6-460 H1 Food-Grade

Double Reduction Worm - Planetary Speed Reducer

Example: SSHFWP732B-300KT-B5-HS1-P20

SS – Stainless Steel Material

H – Style
- Blank – Solid Output Shaft
- H – *BostMount* Hollow Output

F – Quill Style Motor Flange
- QC – Quick Connect Motor Flange (Close Coupled)

WP – Planetary Multiplier

7 – 700 Series

32 – Center Distance
- 13 – 1.33
- 15 – 1.54
- 18 – 1.75
- 21 – 2.06
- 24 – 2.38
- 26 – 2.62
- 32 – 3.25

B – Base
- Blank – No Base
- B – Horizontal Base
- V – Output Flange - Right Mount
- W – Output Flange - Left Mount

–

300 – Reduction Ratio To 1
75, 100, 150, 200, 250, 300, 400, 500

Double Reduction Worm - Worm Speed Reducer

Example: SSHFWB732B-3600KT-B5-LS1-P20

SS – Stainless Steel Material

H – Style
- Blank – Solid Output Shaft
- H – *BostMount* Hollow Output

F – Quill Style Motor Flange
- QC – Quick Connect Motor Flange (Close Coupled)

WB – Input & Output Style
- WB – Double Reduction Parallel Shafts
- WD – Double Reduction Right Angle Shafts

7 – 700 Series

32 – Center Distance (Inches)
- 13 – 1.33
- 18 – 1.75
- 21 – 2.06
- 26 – 2.62
- 32 – 3.25

B – Base
- Blank – No Base
- B – Horizontal Base
- V – Output Flange - Right Mount
- W – Output Flange - Left Mount

–

3600 – Reduction Ratio To 1
100, 150, 200, 300, 400, 600, 900, 1200, 1800, 2000, 2400, 3000, 3600

Ordering Information

T – B7 – HS 1 – P20 – KUTFSS – 3

Seal Options
Blank – Standard Seals
T – Double Input Seals
C – High pressure washdown output seals and double input seals (Available for SSHF718, 721, 724, 726 & 732)

NEMA Motor Mounting

BORE CODE	NEMA MOUNTING	INPUT BORE	KEYWAY SIZES
B5	56C	.625	3/16 x 3/32
B7	140TC/180C	.875	3/16 x 3/32
B9	180TC/210C	1.125	1/4 x 1/8

Output Shaft
303 Stainless Steel (when facing input)
GS – Stainless Output Projection - Left
HS – Stainless Double Output Projection
JS – Stainless Output Projection - Right

Mounting Positions
1 – Standard Mounting (Worm Over)
2-6 – Refer to Mounting Positions on Page 56

***BostMount* Output Bore Code**
Blank -Solid Output Shaft
Specified in 1/16" increments.
See Table 1 on Page 56
Ex: 1-1/4" = P20

Motor
C-Face Motor
Blank – No Motor
See Table 2 on Page 56

Motor Conduit Box Orientation
(When looking at fan end of motor and gearbox is in mounting position #1)
0 – 12 O'clock
3 – 3 O'clock (standard for G & H shaft assemblies)
6 – 6 O'clock
9 – 9 O'clock (standard for J shaft assemblies)

K T – B5 – HS 1 – P20 – – –

Lubrication
Blank – No Lubrication
K – Klubersynth UH1-6-460 H1 Food-Grade

Seal Options
Blank – Standard Seals
T – Double Input Seals
C – High pressure washdown output seals and double input seals (Available for SSHF718, 721, 724, 726 & 732)

NEMA Motor Mounting

BORE CODE	NEMA MOUNTING	INPUT BORE	KEYWAY SIZES
B5	56C	.625	3/16 x 3/32

Output Shaft
303 Stainless Steel (when facing input)
GS – Stainless Ouput Projection - Left
HS – Stainless Double Output Projection
JS – Stainless Output Projection - Right

Mounting Positions
1 – Standard Mounting (Worm Over)
2-6 – Refer to Mounting Positions on Page 56

***BostMount* Output Bore Code**
Blank -Solid Output Shaft
Specified in 1/16" increments.
See Table 1 on Page 56
Ex: 1-1/4" = P20

Motor
C-Face Motor
Blank – No Motor
See Table 2 on Page 56

Motor Conduit Box Orientation
(When looking at fan end of motor and gearbox is in mounting position #1)
0 – 12 O'clock
3 – 3 O'clock (standard for G & H shaft assemblies)
6 – 6 O'clock
9 – 9 O'clock (standard for J shaft assemblies)

K T – B5 – LS 1 – P20 – – –

Lubrication
Blank – No Lubrication Provided
K – Klubersynth UH1-6-460 H1 Food-Grade

Seal Options
Blank – Standard Seals
T – Double Input Seals
C – High pressure washdown output seals and double input seals (Available for SSHF718, 721, 724, 726 & 732)

NEMA Motor Mounting

Bore Code	NEMA Mounting	Input Bore	Keyway Sizes
B5	56C	.625	3/16 x 3/32
B7	140TC/180C	.875	3/16 x 3/32

Output Shaft
303 Stainless Steel (when facing input of base housing)
MS – Stainless Ouput Projection - Left
LS – Stainless Double Output Projection
KS – Stainless Output Projection - Right

Mounting Positions
1 – Standard Mounting (Worm Over)
2-6 – Refer to Mounting Positions on Page 56

***BostMount* Output Bore Code**
Blank -Solid Output Shaft
Specified in 1/16" increments.
See Table 1 on Page 56
Ex: 1-1/4" = P20

Motor
C-Face Motor
Blank – No Motor
See Table 2 on Page 56

Motor Conduit Box Orientation
(When looking at fan end of motor and gearbox is in mounting position #1)
0 – 12 O'clock
3 – 3 O'clock (standard for M & L shaft assemblies)
6 – 6 O'clock
9 – 9 O'clock (standard for K shaft assemblies)

Ordering Information

A

Horizontal Base Kits for SS700 Series

(If ordered separately)

Size	Kit	
713	J00877	XSS713-11H-BK
715	J00878	XSS715-11H-BK
718	J00304	XSS718-11H-BK
721	J00305	XSS721-11H-BK
724	J00879	XSS724-11H-BK
726	J00306	XSS726-11H-BK
732	J00307	XSS732-11H-BK

Kit includes (2) feet, (4) attaching bolts and (4) hardware covers.

Replacement Hardware Covers

Size	Housing Oil Plugs	Bearing Carrier	Mounting Feet	Output Flange	Motor Flange B5/B7 (56C/140TC)	Motor Flange B9 (180TC)
713	J00195	N/A	N/A	J00195	J00195	J00195 & J00196
715	J00195	J00195	J00196	J00195	J00195	J00195 & J00196
718	J00195	J00195	J00196	J00195	J00195	J00195 & J00196
721	J00195	J00195	J00196	J00195	J00195	J00195 & J00196
724	J00195	J00195	J00196	J00195	J00195	J00195 & J00196
726	J00195	J00195	J00196	J00195	J00195	J00195 & J00196
732	J00195	J00195	J00196	J00196	J00195	J00195 & J00196

J00195 has nominal O.D of 0.605"
J00196 has nominal O.D. of 0.812"
Material: Stainless Steel disk (metal detectable) with over-molded rubber

Table 1: Hollow Output Shaft Bore Codes

Fraction Size	Output Bore Code	713	715	718	721	724	726	732	Decimal Size*	Key Size†
5/8	P10	S							.6250	.187 x .125 x 1.00
3/4	P12	•	•	•	•	•			.7500	.187 x .156 x 1.00
7/8	P14	•	•	•	•	•			.8750	.187 x .156 x 1.00
15/16	P15	•	•	•	•	•	•		.9375	.25 x .218 x 1.37
1	P16	S	S	S	S	S	•		1.0000	.25 x .218 x 1.37
1-1/8	P18				•	•	•		1.1250	.25 x .218 x 1.37
1-3/16	P19				S	S	•	•	1.1875	.25 x .218 x 1.37
1-1/4	P20				S	S	S	•	1.2500	.25 x .218 x 1.37
1-7/16	P23				S	S	S	S	1.4375	.375 x .312 x 1.75
1-1/2	P24						S	S	1.5000	.375 x .312 x 1.75
1-15/16	P31						•	S	1.9375	.50 x .375 x 2.00
2	P32							•	2.0000	.50 x .375 x 2.00
2 3/16	P35							•	2.1875	.50 x .375 x 2.00

*Bore tolerance +.0015 / – .0000
S Standard Bore – Included in Express Program
• Optional Bore
† Rectangular key is provided with reducer to fit hollow shaft. Drive shaft requires standard width and depth keyway.
Note: For all other bore sizes, contact factory.

Table 2: Stainless Steel AC Motors

Part #	HP	Type	Frame Size
FUT-SS	0.5	TENV	56C
GUT-SS	0.75	TENV	56C
HUT5/8-SS	1.0	TENV	56C
HUTF5/8-SS	1.0	TEFC	56C
HUT-SS	1.0	TENV	140TC
HUTF-SS	1.0	TEFC	140TC
JUTF-SS	1.5	TEFC	140TC
KUTF-SS	2.0	TEFC	140TC
LUTF-SS	3.0	TEFC	180TC
MUTF-SS	5.0	TEFC	180TC

TENV = Totally enclosed, non-ventilated
TEFC = Totally enclosed, fan-cooled

Mounting Positions & Lubrication

Oil Levels For Typical Mounting Positions

(Examples shown for single-reduction models only)

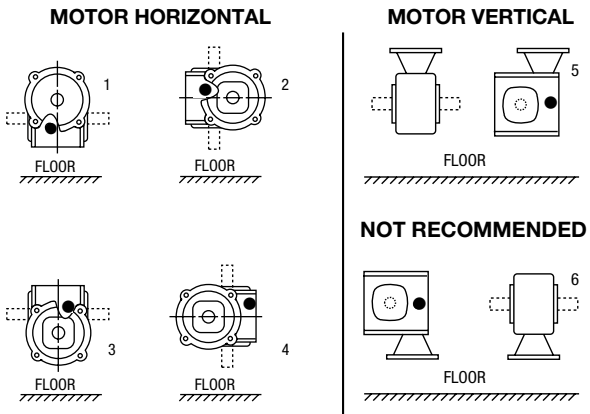

● Indicates proper oil level.

NOTE: Double input seals are required for all positions except #1 and #5.

Enclosed Worm Gear Reducers Lubricant Available from Boston Gear

Ambient (Room) Temp.	Recommended Oil (or equivalent)	Viscosity Range SUS @ 100°F	ISO Viscosity Grade No.	Klubersynth UH1 6-460 Qt. Part No.
-20° to 225°F** (-29° to 107°C)	Klubersynth* UH1 6-460 Synthetic H1 Food Grade Oil	1950/2500	460	65159

* Synthetic recommendation is exclusively Klubersynth UH1 6-460, other lubricants will reduce performance ratings.
** The Klubersynth UH1 6-460 lubricant will perform at temperatures considerably higher than 225°F. However, the factory should always be consulted prior to operating at higher temperatures, as damage may occur to oil seals and other components.

Oil Capacity in Fluid Ounces

(SS700 Units Only)

Unit Size	Positions				
	1	2	3	4	5 & 6
713	3.2	3.2	4.8	3.2	3.2
715	11.2	13.6	17.6	13.6	13.6
718	14.4	17.6	20.8	17.6	17.6
721	17.6	20.8	22.4	20.8	20.8
724	21.0	22.5	25.5	22.5	22.5
726	37.0	37.0	41.5	37.0	37.0
732	81.5	85.0	93.0	85.0	85.0

Double reduction stainless gearboxes require the primary and secondary boxes to be filled independently to their respective mounting position.

Ratios and Performance

Single Reduction

Series Size			713			715			718			721			724			726			732		
				Output			Output			Output			Output			Output			Output			Output		
	Input	Output	Input		Torque	Input		Torque	Input		Torque	Input		Torque	Input		Torque	Input		Torque	Input		Torque
Ratio	RPM	RPM	HP	HP	(in-lbs)	HP	HP	(in-lbs)	HP	HP	(in-lbs)	HP	HP	(in-lbs)	HP	HP	(in-lbs)	HP	HP	(in-lbs)	HP	HP	(in-lbs)
5	1750	350	1.39	1.31	235	1.72	1.62	291	2.55	2.40	432	3.66	3.44	620	4.94	4.65	838	6.11	5.74	1034	10.05	9.54	1716
	1150	230	0.84	0.73	200	1.15	1.04	285	1.42	1.28	350	2.33	2.10	575	3.05	2.74	750	4.05	3.64	1000	8.43	7.91	2165
	690	138	0.50	0.45	205	0.80	0.72	330	0.97	0.87	400	1.64	1.47	670	2.25	2.01	920	3.04	2.74	1250	6.53	6.02	2749
	100	20	0.09	0.08	240	0.14	0.12	370	0.17	0.14	460	0.30	0.26	820	0.43	0.38	1200	0.58	0.51	1600	1.38	1.19	3735
10	1750	175	0.86	0.78	281	1.20	1.10	397	1.61	1.49	536	2.34	2.19	789	3.18	2.97	1069	3.94	3.74	1345	6.22	5.85	2106
	1150	115	0.51	0.44	243	0.73	0.64	350	0.98	0.87	480	1.49	1.32	725	2.09	1.87	1025	2.82	2.54	1390	4.41	3.92	2150
	690	69	0.33	0.29	266	0.47	0.42	384	0.66	0.58	534	1.00	0.89	814	1.46	1.31	1200	1.97	1.75	1600	3.17	2.85	2600
	100	10	0.06	0.05	296	0.09	0.07	432	0.12	0.10	610	0.19	0.15	968	0.27	0.23	1430	0.37	0.31	1960	0.62	0.52	3300
15	1750	116.7	0.66	0.58	305	0.91	0.79	428	1.13	1.02	552	1.72	1.56	840	2.34	2.15	1159	2.95	2.71	1465	4.65	4.34	2344
	1150	76.7	0.37	0.32	262	0.53	0.46	376	0.67	0.57	472	1.06	0.91	752	1.51	1.29	1060	2.01	1.73	1425	3.15	2.74	2250
	690	46	0.26	0.21	288	0.36	0.30	415	0.46	0.39	534	0.72	0.61	832	1.05	0.90	1239	1.41	1.22	1675	2.35	2.04	2800
	100	6.7	0.05	0.03	322	0.07	0.05	468	0.09	0.06	597	0.13	0.10	968	0.19	0.15	1463	0.28	0.22	2057	0.48	0.39	3700
20	1750	87.5	0.52	0.43	308	0.72	0.60	435	0.97	0.82	590	1.40	1.24	892	1.95	1.71	1233	2.34	2.06	1483	3.71	3.35	2413
	1150	57.5	0.29	0.24	265	0.43	0.35	380	0.58	0.48	525	0.86	0.72	782	1.27	1.06	1160	1.63	1.36	1500	2.77	2.37	2600
	690	34.5	0.19	0.16	286	0.28	0.23	420	0.38	0.32	580	0.57	0.48	875	0.83	0.70	1280	1.11	0.94	1725	1.99	1.70	3100
	100	5	0.04	0.03	330	0.06	0.04	485	0.08	0.06	690	0.11	0.08	1018	0.17	0.12	1550	0.20	0.16	2050	0.41	0.30	3846
25	1750	70	0.43	0.34	307	0.60	0.49	437	0.76	0.64	574	1.16	0.97	875	1.55	1.33	1199	1.94	1.68	1514	3.08	2.71	2443
	1150	46	0.24	0.19	260	0.35	0.27	375	0.48	0.36	500	0.72	0.58	790	1.03	0.84	1150	1.31	1.11	1525	2.29	1.90	2600
	690	27.6	0.15	0.12	280	0.22	0.18	410	0.30	0.24	540	0.47	0.38	875	0.69	0.56	1280	0.93	0.77	1750	1.51	1.27	2900
	100	4	0.03	0.02	310	0.04	0.03	451	0.06	0.04	660	0.10	0.07	975	0.14	0.10	1500	0.18	0.13	2075	0.31	0.22	3500
30	1750	58.3	0.39	0.29	311	0.54	0.41	446	0.65	0.53	573	0.99	0.81	871	1.33	1.11	1200	1.68	1.41	1521	2.64	2.27	2456
	1150	38.3	0.21	0.16	270	0.31	0.23	388	0.40	0.32	530	0.62	0.48	795	0.89	0.70	1170	1.20	0.96	1575	2.80	2.23	2675
	690	23	0.14	0.11	300	0.20	0.17	460	0.29	0.22	600	0.41	0.32	880	0.60	0.47	1300	0.81	0.65	1790	1.41	1.16	3200
	100	3.3	0.03	0.02	340	0.04	0.03	496	0.06	0.04	710	0.09	0.06	1050	0.12	0.08	1500	0.16	0.11	2100	0.30	0.21	4000
40	1750	43.8	0.31	0.21	307	0.43	0.31	441	0.57	0.42	609	0.81	0.61	876	1.08	0.84	1206	1.33	1.05	1512	2.10	1.70	2444
	1150	28.8	0.18	0.12	265	0.24	0.17	380	0.33	0.24	525	0.49	0.36	785	0.70	0.53	1160	0.89	0.68	1500	1.52	1.19	2600
	690	17.3	0.10	0.08	286	0.15	0.11	420	0.22	0.16	580	0.33	0.24	875	0.46	0.35	1280	0.61	0.47	1725	1.08	0.85	3100
	100	2.5	0.03	0.01	330	0.04	0.02	485	0.05	0.03	690	0.07	0.04	1018	0.11	0.06	1550	0.14	0.08	2050	0.25	0.15	3846
50	1750	35	0.25	0.17	297	0.35	0.24	429	0.44	0.32	573	0.66	0.48	857	0.87	0.65	1177	1.08	0.82	1484	1.70	1.33	2403
	1150	23	0.12	0.09	248	0.18	0.13	360	0.24	0.17	470	0.38	0.27	750	0.56	0.40	1100	0.75	0.54	1482	1.21	0.89	2450
	690	13.8	0.08	0.06	265	0.12	0.09	390	0.17	0.12	520	0.26	0.18	840	0.37	0.26	1225	0.51	0.37	1675	0.87	0.61	2800
	100	2	0.02	0.01	300	0.03	0.01	440	0.04	0.02	590	0.06	0.03	970	0.08	0.05	1425	0.11	0.06	1975	0.19	0.10	3325
60	1750	29.2	0.22	0.13	271	0.28	0.18	399	0.35	0.24	527	0.55	0.38	826	0.73	0.52	1128	0.89	0.64	1385	1.40	1.06	2281
	1150	19.2	0.17	0.09	201	0.16	0.10	312	0.21	0.13	440	0.34	0.22	730	0.49	0.32	1040	0.64	0.42	1390	1.05	0.70	2300
	690	11.5	0.10	0.05	253	0.11	0.06	338	0.14	0.08	480	0.23	0.15	805	0.33	0.21	1154	0.44	0.29	1570	0.71	0.48	2650
	100	1.7	0.02	0.01	285	0.022	0.01	371	0.03	0.01	530	0.06	0.03	930	0.07	0.04	1330	0.10	0.05	1840	0.16	0.08	3100
80	1750	21.9	0.15	0.08	222	0.21	0.11	318	0.23	0.13	375	0.38	0.22	634	-	-	-	0.76	0.38	1100	0.95	0.62	1795
	1150	14.4	0.12	0.06	246	0.17	0.08	358	0.16	0.09	390	0.31	0.17	734	-	-	-	0.47	0.29	1252	0.81	0.50	2171
	690	8.6	0.09	0.04	266	0.12	0.05	392	0.10	0.05	350	0.23	0.11	819	-	-	-	0.35	0.18	1340	0.61	0.34	2512
	100	1.3	0.02	0.01	293	0.03	0.01	440	0.02	0.01	470	0.05	0.02	942	-	-	-	0.07	0.03	1600	0.14	0.06	3030
100	1750	17.5	0.08	0.04	138	0.15	0.07	251	0.17	0.09	323	0.27	0.14	503	-	-	-	0.39	0.21	757	0.65	0.39	1414
	1150	11.5	0.07	0.028	152	0.12	0.05	283	0.14	0.07	360	0.22	0.11	580	-	-	-	0.34	0.17	913	0.56	0.31	1711
	690	6.9	0.05	0.02	164	0.09	0.03	309	0.10	0.04	391	0.16	0.07	646	-	-	-	0.26	0.12	1054	0.43	0.22	1980
	100	1	0.01	0.00	180	0.02	0.01	347	0.02	0.01	435	0.04	0.01	744	-	-	-	0.06	0.02	1267	0.10	0.04	2387
Overhung Load*			**200 lbs**			**300 lbs**			**500 lbs**			**700 lbs.**			**900 lbs**			**1000 lbs**			**1300 lbs**		
Output Shaft Thrust Load			**300 lbs**			**400 lbs**			**500 lbs**			**700 lbs**			**800 lbs**			**900 lbs**			**1100 lbs**		

Ratings shown reflect maximum gear capacity based on AGMA standards (Service Factor = 1.0) with Klubersynth UH1 6-460.
*Overhung Load is at centerline of output shaft projection and with NO THRUST Load.
Note: For input speeds above 1750 RPM, do NOT exceed maximum listed input horsepower.

Ratios and Performance

Worm-Planetary Double Reduction (WP)

Series Size			SS_WP713			SS_WP715			SS_WP718			SS_WP721			SS_WP724			SS_WP726			SS_WP732		
Ratio	Input RPM	Output RPM	Input HP	Output		Input HP	Output		Input HP	Output		Input HP	Output		Input HP	Output		Input HP	Output		Input HP	Output	
				HP	Torque (in-lbs)		HP	Torque (in-lbs)		HP	Torque (in-lbs)		HP	Torque (in-lbs)		HP	Torque (in-lbs)		HP	Torque (in-lbs)		HP	Torque (in-lbs)
75	1750	23.3	0.15	0.11	293	0.24	0.16	446	0.27	0.21	570	0.44	0.34	910	0.66	0.51	1367	0.75	0.57	1542	0.75	0.57	1542
100	1750	17.5	0.13	0.09	311	0.19	0.13	457	0.25	0.18	643	0.38	0.27	957	0.56	0.40	1435	0.74	0.53	1912	0.75	0.54	2072
150	1750	11.7	0.10	0.06	300	0.16	0.09	509	0.18	0.12	663	0.26	0.18	978	0.40	0.26	1415	0.53	0.36	1969	0.75	0.51	2747
200	1750	8.8	0.08	0.04	309	0.13	0.07	520	0.14	0.09	643	0.20	0.13	957	0.35	0.20	1435	0.42	0.27	1912	0.75	0.49	3509
250	1750	7	0.07	0.03	312	0.11	0.06	505	0.10	0.06	560	0.16	0.10	915	0.27	0.15	1340	0.33	0.21	1848	0.54	0.34	3103
300	1750	5.8	0.06	0.03	273	0.09	0.04	477	0.09	0.05	510	0.15	0.08	877	0.24	0.12	1255	0.30	0.16	1726	0.50	0.27	2909
400	1750	4.4	0.05	0.02	251	0.08	0.03	419	0.07	0.03	413	0.13	0.06	890	-	-	-	0.22	0.10	1490	0.44	0.20	2811
500	1750	3.5	0.03	0.01	197	0.05	0.02	330	0.05	0.02	416	0.09	0.04	702	-	-	-	0.16	0.07	1177	0.28	0.12	2215
Overhung Load*			200 lbs			300 lbs			500 lbs			700 lbs			900 lbs			1000 lbs			1300 lbs		
Output Shaft Thrust Load			300 lbs			400 lbs			500 lbs			700 lbs			800 lbs			900 lbs			1100 lbs		

Stand-Alone Planetary			SSFSP5 and SSFSP5A		
Ratio	Input RPM	Output RPM	Input HP	Output	
				HP	Torque (in-lbs)
5	1750	350	0.75	0.69	124

Ratings shown reflect maximum gear capacity based on AGMA standards (Service Factor = 1.0) with Klubersynth UH1 6-460.
Worm-Planetary and Stand-Alone Planetary gearing is not recommended for use in applications with repetitive vibrational or impact loading.
*Overhung Load is at centerline of output shaft projection and with NO THRUST Load.
Note: For input speeds above 1750 RPM, do NOT exceed maximum listed input horsepower.

Worm-Worm Double Reduction (WB & WD)

Series Size			SS_WB/WD713			SS_WB/WD718			SS_WB/WD721			SS_WB/WD726			SS_WB/WD732		
Ratio	Input RPM	Output RPM	Input HP	Output		Input HP	Output		Input HP	Output		Input HP	Output		Input HP	Output	
				HP	Torque (in-lbs)		HP	Torque (in-lbs)		HP	Torque (in-lbs)		HP	Torque (in-lbs)		HP	Torque (in-lbs)
100	1750	17.5	0.16	0.08	275	0.23	0.16	570	0.41	0.25	910	0.75	0.50	1785	1.33	0.96	3450
150	1750	11.7	0.13	0.05	280	0.23	0.11	580	0.30	0.17	940	0.56	0.34	1840	1.00	0.67	3600
200	1750	8.8	0.12	0.05	320	0.19	0.09	660	0.25	0.14	990	0.47	0.26	1875	0.81	0.53	3800
300	1750	5.8	0.10	0.03	335	0.16	0.06	690	0.20	0.09	1025	0.37	0.18	1950	0.61	0.36	3950
400	1750	4.4	0.09	0.02	330	0.12	0.05	690	0.17	0.02	1025	0.31	0.14	1950	0.48	0.27	3900
600	1750	2.9	0.08	0.02	340	0.10	0.03	710	0.13	0.05	1025	0.25	0.09	2000	0.36	0.18	4025
900	1750	1.9	0.07	0.01	340	0.08	0.02	710	0.11	0.03	1050	0.21	0.06	2000	0.28	0.12	4025
1200	1750	1.5	0.07	0.01	330	0.07	0.02	690	0.10	0.02	1025	0.19	0.05	1950	0.23	0.09	3900
1800	1750	1	-	-	-	-	-	-	0.08	0.01	900	0.16	0.03	1775	0.19	0.06	3750
2000	1750	0.9	-	-	-	0.052	0.008	590	-	-	-	0.16	0.03	1940	0.22	0.05	3880
2400	1750	0.7	-	-	-	-	-	-	0.05	0.01	900	0.15	0.02	1864	0.17	0.04	3143
3000	1750	0.6	-	-	-	-	-	-	-	-	-	0.14	0.02	1800	0.15	0.04	3750
3600	1750	0.5	-	-	-	-	-	-	-	-	-	0.13	0.01	1865	0.14	0.02	3154
Overhung Load*			200 lbs.			500 lbs.			700 lbs.			1000 lbs.			1300 lbs.		
Output Shaft Thrust Load			300 lbs.			500 lbs.			700 lbs.			900 lbs.			1100 lbs.		

Ratings shown reflect maximum gear capacity based on AGMA standards (Service Factor = 1.0) with Klubersynth UH1 6-460.
*Overhung Load is at centerline of output shaft projection and with NO THRUST Load.
Note: For input speeds above 1750 RPM, do NOT exceed maximum listed input horsepower.

Dimensions



SSHF700 & SSHQC700 Hollow Shaft without Base

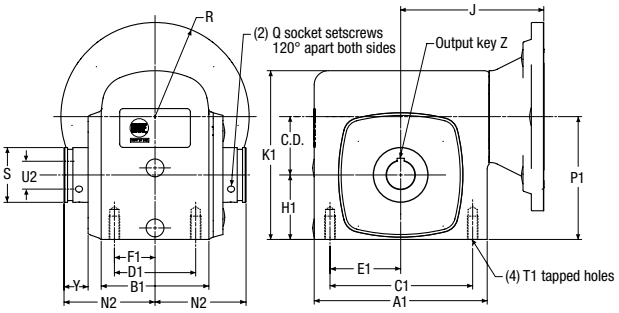

SSHF700 & SSHQC700 Hollow Shaft with Base

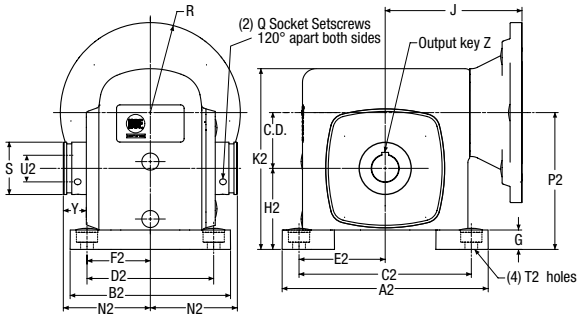

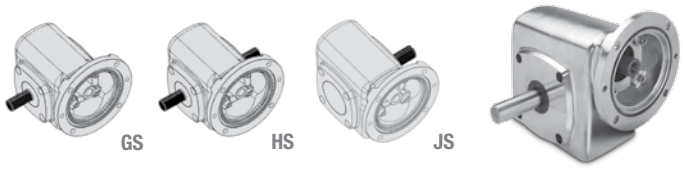

SSF700 & SSQC700 GS Solid Shaft without Base

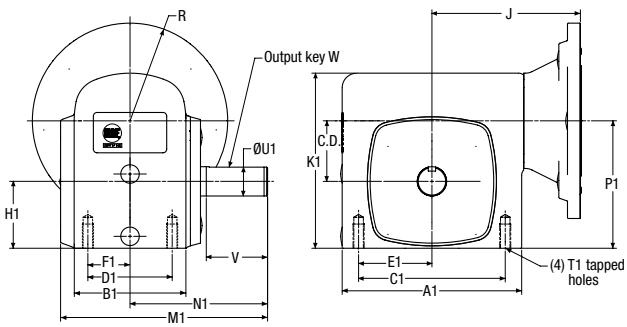

SSF700 & SSQC700 GS Solid Shaft with Base

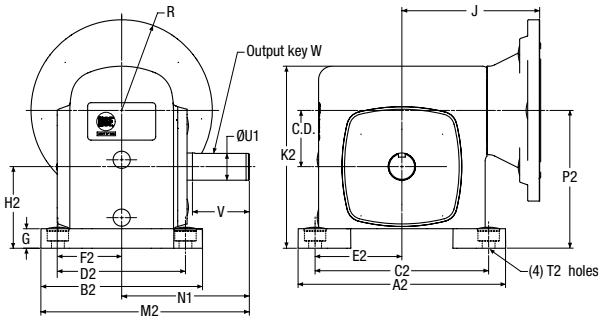

Size	C.D.	A1	A2	B1	B2	C1	C2	D1	D2	E1	E2	F1	F2
713	1.33	4.35	5.25	2.87	4.19	3.25	4.38	2.00	3.31	1.63	2.19	1.00	1.66
715	1.54	5.26	6.46	3.69	5.5	4.19	5.25	2.75	4.31	2.09	2.63	1.38	2.16
718	1.75	5.63	7.00	3.69	5.75	4.19	5.75	2.75	4.50	2.09	2.88	1.38	2.25
721	2.06	6.12	7.62	3.81	5.94	5.00	6.38	2.88	4.69	2.50	3.19	1.44	2.34
724	2.38	6.52	8.37	4.06	6.18	5.00	7.06	2.88	4.88	2.5	3.53	1.44	2.44
726	2.62	7.58	9.25	4.44	6.50	6.38	8.00	3.38	5.25	3.19	4.00	1.69	2.63
732	3.25	9.20	11.00	5.88	7.62	7.50	9.50	4.00	6.13	3.75	4.75	2.00	3.06

Size	G	H1	H2	J				K1	K2	M1	M2	N1	N2	P1	P2	Q
				F700		QC700 NEW										
				56C/140TC	180TC	56C/140TC	180TC									
713	0.53	1.72	2.25	3.94	-	5.46	-	4.27	4.8	5.88	6.10	4.00	2.50	3.06	3.59	#10-32
715	0.59	1.91	2.5	4.50	-	6.11	-	5.48	6.08	6.71	7.06	4.31	3.03	3.44	4.06	#10-32
718	0.69	2.06	2.75	4.69	-	6.29	-	5.31	6.00	6.74	7.19	4.31	3.03	3.81	4.50	#10-32
721	0.72	2.28	3.00	5.06	-	6.76	-	5.97	6.69	7.09	7.66	4.69	3.22	4.34	5.06	1/4-28
724	0.75	2.5	3.25	5.25	5.69	6.95	7.81	7.04	7.79	7.61	8.18	5.09	3.22	4.88	5.63	1/4-28
726	0.75	2.94	3.69	5.75	6.19	7.39	7.81	7.50	8.25	8.33	8.87	5.63	3.44	5.56	6.31	5/16-24
732	0.88	3.50	4.38	6.56	7.00	8.20	8.77	9.25	10.13	10.49	10.99	7.06	4.31	6.75	7.63	5/16-24

Size	R		S	T1	T2 C'Bore/ Hole Dias.	U1 +.000 -.001	Max U2*	V	W	Y	Z	Approx. Weight (lbs.)			
	56C/140TC	180TC/210TC										SSF700	SSHF700	SSF700B	SSHF700B
713	3.33	-	1.38	5/16-18	-	0.625	1.0000	2.00	3/16 x 1	0.63	*	13	15	15	17
715	3.33	-	1.38	5/16-18	.60 / .41	0.750	1.0000	1.78	3/16 x 1	0.63	*	21	24	23	26
718	3.33	-	1.38	5/16-18	.60 / .41	0.875	1.0000	1.78	3/16 x 1	0.60	*	22	25	25	28
721	3.33	-	2.00	3/8-16	.78 / .47	1.000	1.4375	2.09	1/4 x 1-1/4	0.82	*	27	30	30	33
724	3.33	4.63	2.00	3/8-16	.78 / .47	1.125	1.4375	2.38	1/4 x 1-1/4	0.70	*	37	42	41	46
726	3.33	4.63	2.50	3/8-16	.78 / .53	1.125	1.9375	2.63	1/4 x 1-15/16	0.73	*	40	47	44	51
732	3.33	4.63	2.88	7/16-14	.78 / .53	1.375	2.1875	3.25	5/16 x 2-7/16	0.89	*	63	76	70	83

* Refer to Table 1 on page 56.

Dimensions

A



SSHF700W & SSHQC700W Hollow Output Shaft, W Position

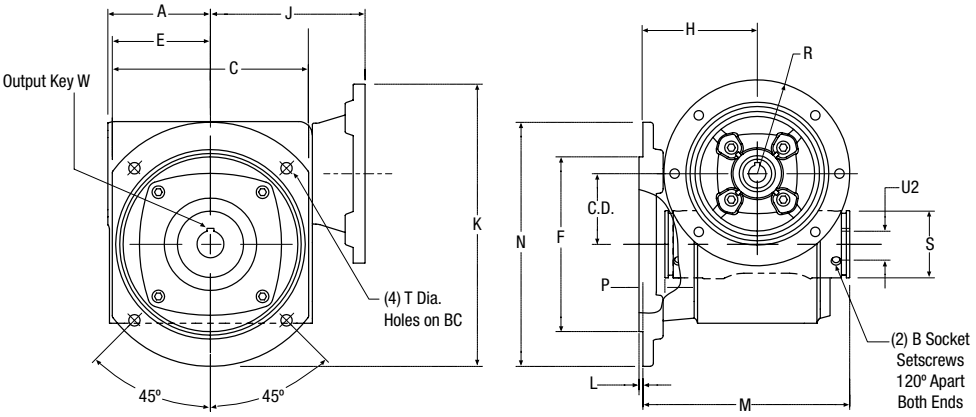

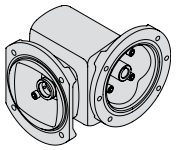

W Output Flange
(Available for all sizes)

SSHF700V & SSHQC700V Hollow Output Shaft, V Position

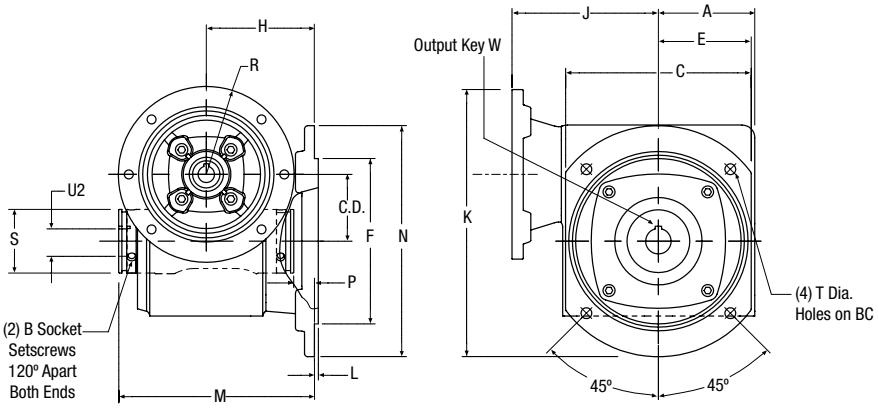

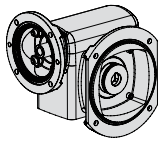

V Output Flange
(Not available for
sizes 718 & 721)

Size	C.D.	A	B	C	B.C.	E	F	H	J F700 56C/140TC	J F700 180TC	J QC700 NEW 56C/140TC	J QC700 NEW 180TC	K	L
713	1.33	2.18	#10-32	4.75	5.00	2.38	4.125	3.18	3.94	-	5.46	-	7.55	0.15
715	1.54	2.63	#10-32	5.54	5.88	2.77	4.750	4.08	4.50	-	6.11	-	8.34	0.15
718	1.75	2.82	#10-32	5.53	5.88	2.77	5.470	3.62	4.69	-	6.29	-	8.55	0.15
721	2.06	3.06	1/4-28	6.03	6.50	3.02	5.250	3.94	5.06	-	6.76	-	9.17	0.15
724	2.38	3.25	1/4-28	6.80	7.50	3.40	5.500	4.22	5.25	5.69	6.95	7.81	9.94	0.15
726	2.62	3.80	5/16-24	7.29	8.00	3.65	6.500	4.45	5.75	6.19	7.39	7.81	10.50	0.15
732	3.25	4.60	5/16-24	8.79	10.00	4.40	8.000	5.50	6.56	7.00	8.20	8.77	12.22	0.15

Size	M	N	P	R 56C/140TC	R 180TC/210TC	S	T** Hole Dia	T** C-Bore Dia	Low Speed Shaft Hollow Bore Output Max U2*	W - Key Sq.	W - Key Length	Approx Weight (lbs.)
713	5.68	5.80	0.68	3.33	-	1.38	0.362	0.600	1.0000	*	*	16
715	7.11	6.94	1.05	3.33	-	1.38	0.362	0.600	1.0000	*	*	26
718	0.65	6.94	0.59	3.33	-	1.38	0.362	0.600	1.0000	*	*	29
721	7.16	7.56	0.72	3.33	-	2.00	0.425	0.600	1.4375	*	*	34
724	7.44	8.60	1.00	3.33	4.63	2.00	0.425	0.600	1.4375	*	*	48
726	7.89	9.08	1.01	3.33	4.63	2.50	0.425	0.600	1.9375	*	*	51
732	9.81	11.28	1.19	3.33	4.63	2.88	0.535	0.808	2.1875	*	*	80

* Refer to Table 1 on page 56.
** Designed for use with socket head capscrews.

SSHFWP700 & SSHQCW700 Hollow Output Shaft

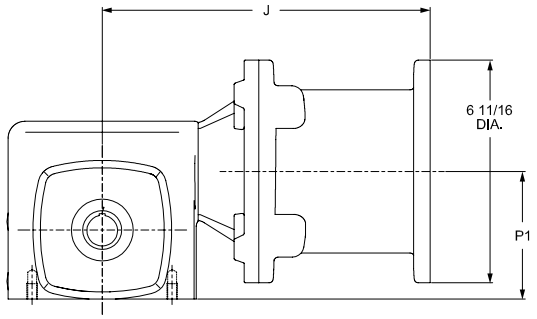

Size	C.D.	J		P1
		F700	QC700 NEW	
		56C/140TC	56C/140TC	
713	1.33	9.07	10.59	3.06*
715	1.54	9.63	11.24	3.44
718	1.75	9.82	11.42	3.81
721	2.06	10.19	11.89	4.34
724	2.38	10.38	12.08	4.88
726	2.62	10.88	12.52	5.56
732	3.25	11.69	13.33	6.75

*Motor flange will drop below the bottom of the speed reducer.

Same dimensions for SSHFWP700 & SSQCWP700 Solid Output Shaft Models.

SS700 WB Series Double Reduction, Parallel Shafts

Dimensions

A



SSHFWB700 & SSHQCWB700 Hollow Output Shaft

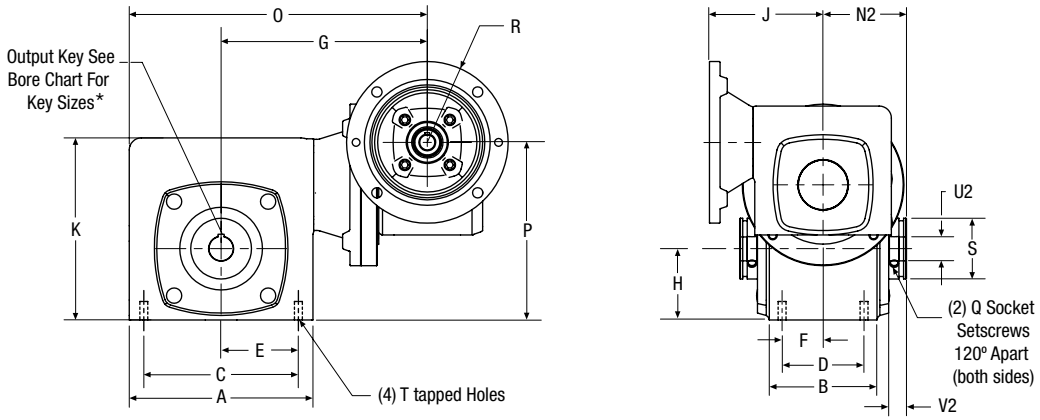

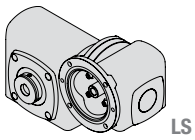

SSFWB700 & SSQCWB700 Solid Output Shaft

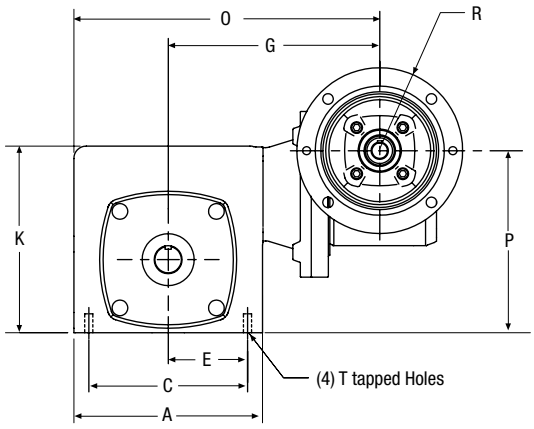

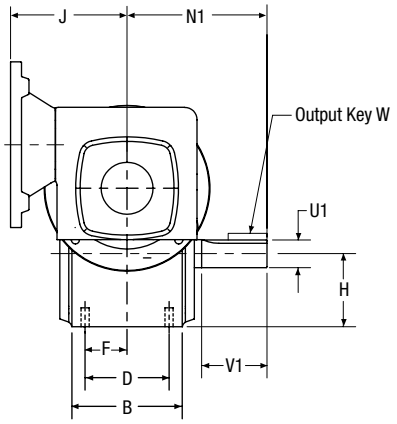

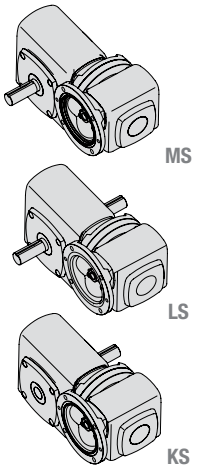

Size	A	B	C	D	E	F	G	H	J F700 56C/140TC	J QC700 NEW 56C/140TC	K	N1	N2	O	P
713	4.35	2.87	3.25	2.00	1.63	1.00	7.00	1.72	3.94	5.46	4.27	4.00	2.50	9.18	4.39
718	5.63	3.69	4.19	2.75	2.09	1.38	7.75	2.06	3.94	5.46	5.31	4.31	3.03	10.57	5.14
721	6.12	3.81	5.00	2.88	2.50	1.44	8.12	2.28	3.94	5.46	5.97	4.69	3.22	11.18	5.67
726	7.58	4.44	6.38	3.38	3.19	1.69	8.56	2.94	4.68	6.29	7.50	5.63	3.44	12.35	7.32
732	9.20	5.88	7.50	4.00	3.75	2.00	9.37	3.50	4.68	6.29	9.25	7.06	4.31	13.97	8.50

Size	Q	R 56C/140TC	S	T Tap Size	Low Speed Shaft: Solid Output Shaft: U1 +.000 -.001	V1	W - Key: Sq.	W - Key: Length	Hollow Bore Output: Max U2*	Hollow Bore Output: V2	Approx Weight (lbs.): SSFWB	Approx Weight (lbs.): SSHFWB
713	#10-32	3.33	1.38	5/16-18	0.625	2.13	3/16	1	1.0000	0.63	28	30
718	#10-32	3.33	1.38	5/16-18	0.875	1.78	3/16	1	1.0000	0.60	37	40
721	1/4-28	3.33	2.00	3/8-16	1.000	2.09	1/4	1-1/4	1.4375	0.82	42	45
726	5/16-24	3.33	2.50	3/8-16	1.125	2.63	1/4	1-15/16	1.9375	0.73	62	69
732	5/16-24	3.33	2.88	7/16-14	1.375	3.25	5/16	2-7/16	2.1875	0.88	85	98

* Refer to Table 1 on page 56.

SS700 WD Series Double Reduction, Right Angle Shafts

Dimensions



SSHFWD700 & SSHQCWD700 Hollow Output Shaft

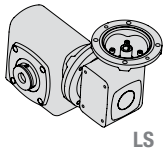

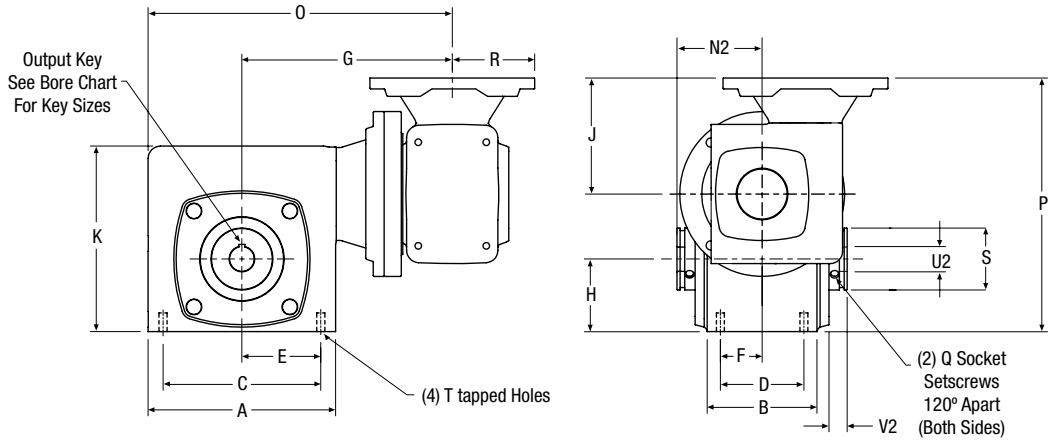

SSFWD700 & SSQCWD700 Solid Output Shaft

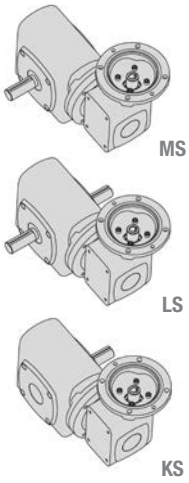

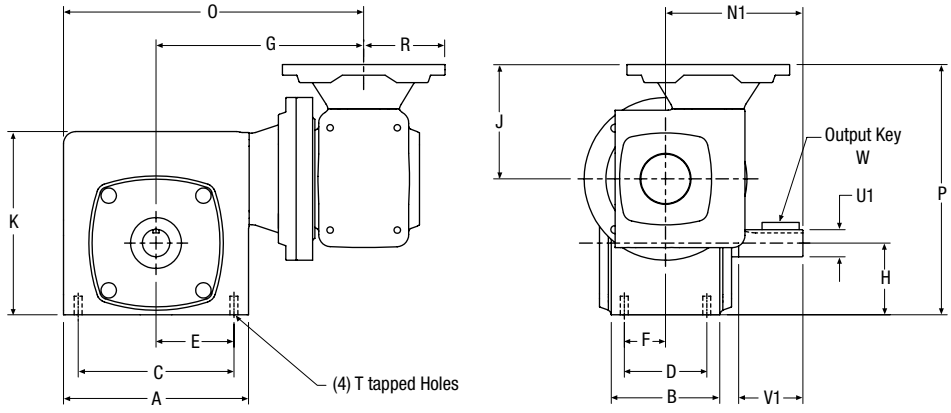

Size	A	B	C	D	E	F	G	H	J F700 56C/140TC	J QC700 NEW 56C/140TC	K	N1	N2	O	P F700 56C/140TC	P QC700 NEW 56C/140TC
713	4.35	2.87	3.25	2.00	1.63	1.00	7.00	1.72	3.94	5.46	4.27	4.00	2.50	9.18	4.39	5.91
718	5.63	3.69	4.19	2.75	2.09	1.38	7.75	2.06	3.94	5.46	5.31	4.31	3.03	10.57	5.14	6.66
721	6.12	3.81	5.00	2.88	2.50	1.44	8.12	2.28	3.94	5.46	5.97	4.69	3.22	11.18	5.67	7.19
726	7.58	4.44	6.38	3.38	3.19	1.69	8.56	2.94	4.68	6.29	7.50	5.63	3.44	12.35	10.25	11.86
732	9.20	5.88	7.50	4.00	3.75	2.00	9.37	3.50	4.68	6.29	9.25	7.06	4.31	13.97	11.44	13.05

Size	Q	R 56C/140TC	S	T Tap Size	Low Speed Shaft: Solid Output Shaft U1 +.000 -.001	V1	W - Key Sq.	W - Key Length	Hollow Bore Output Max U2*	Hollow Bore Output V2	Approx Weight (lbs.) SSFWD	Approx Weight (lbs.) SSHFWD
713	#10-32	3.33	1.38	5/16-18	0.625	2.13	3/16	1	1.0000	0.63	28	30
718	#10-32	3.33	1.38	5/16-18	0.875	1.78	3/16	1	1.0000	0.60	37	40
721	1/4-28	3.33	2.00	3/8-16	1.000	2.09	1/4	1-1/4	1.4375	0.82	42	45
726	5/16-24	3.33	2.50	3/8-16	1.125	2.63	1/4	1-15/16	1.9375	.73	62	69
732	5/16-24	3.33	2.88	7/16-14	1.375	3.25	5/16	2-7/16	2.1875	.88	85	98

* Refer to Table 1 on page 56.

SSFSP Series Planetary Multiplier

Expanded Speed Reduction while Maintaining Operating Efficiency

A

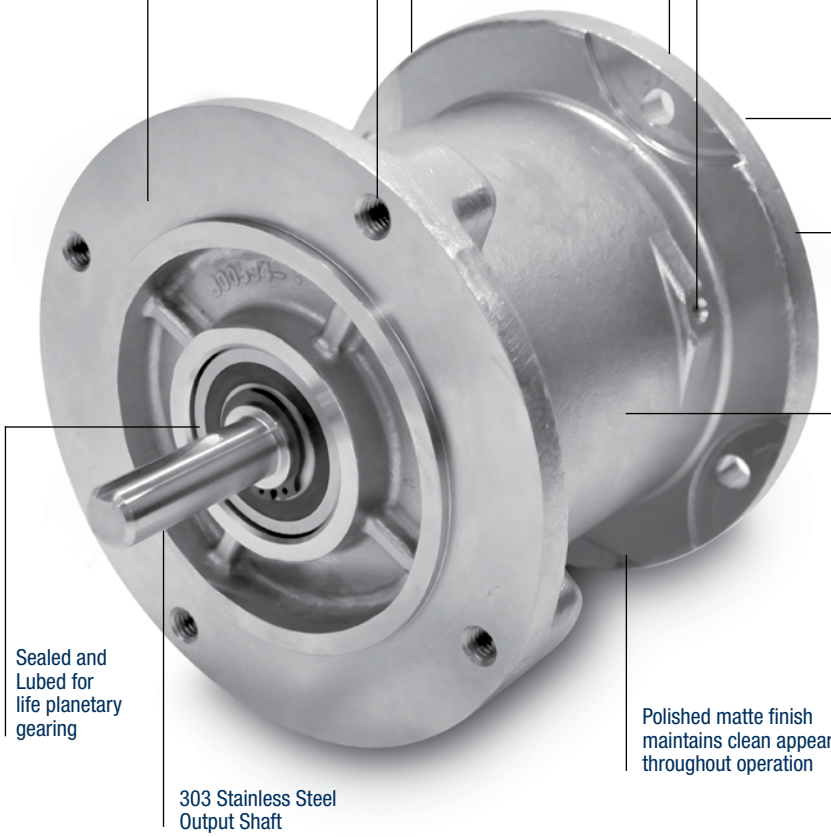

High Efficiency, Quiet Operation Planetary Gearing

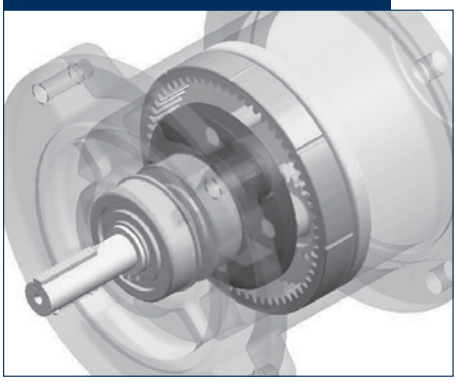

Ordering Information

Stainless Steel Stand - Alone Planetary Multiplier **Example: SSFSP-5A**

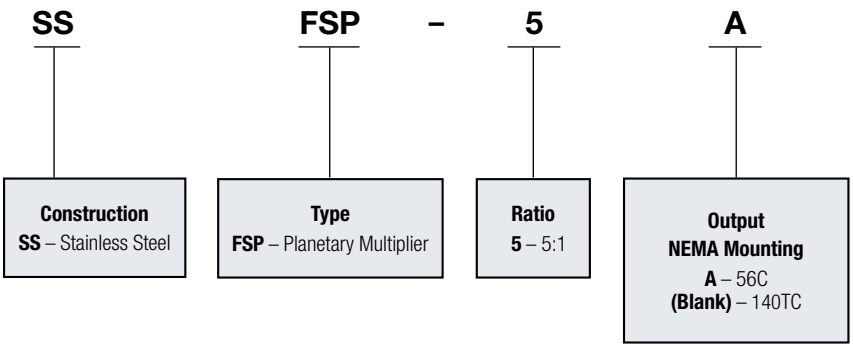

Lubrication

All SSFSP Series Planetary Multipliers are supplied as Lubricated-for-Life for maximum efficiency, maintenance-free operation. The inherent design of planetary gearing is conducive to the use of grease as a lubricant, because the rotation of the sun and planet gears inside of the internal ring gear promotes even distribution of the lubricant and consistent recirculation. The lubricant we apply at the time of assembly is Klubersynth UH1 14-222 grease which has the characteristics shown below.

LUBRICANT	Type	Operating Temperature Range	Certifications	Comments
Klubersynth UH1 14-222	Synthetic Grease, NLGI2	-15F to +225F (-25C to +107C)	FDA 21CFR178.3570 compliant, NSF registered	H1 Food-Grade

Notes: Temperature limit is dictated by multiplier components and not the lubricant.

Performance Data

A

Output RPM	Ratio	Motor HP (1750 RPM Input)	Output		Multiplier Catalog Number
			HP	Torque (lb.ins)	
350	5	1/6	.14	25	SSFSP-5 OR SSFSP-5A
		1/4	.21	38	
		1/3	.29	56	
		1/2	.45	81	
		3/4	.69	124	

Dimensions



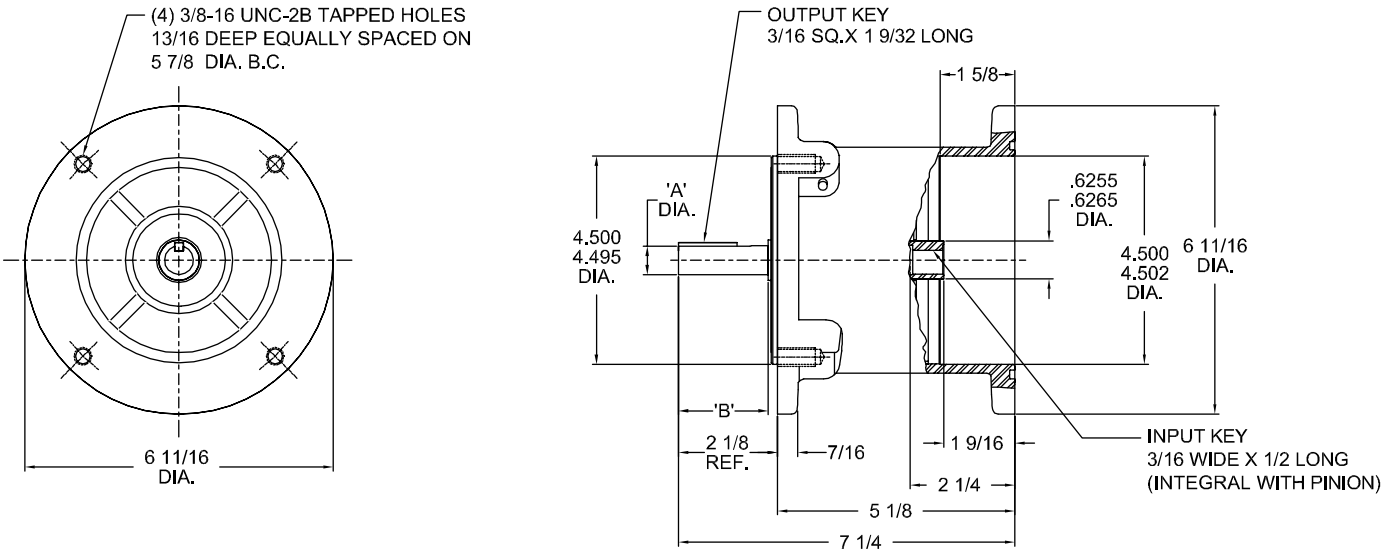

Dimensions in Inches

Catalog Number	A Shaft Dia.	B Shaft Length	Ouput NEMA Frame Size	Input NEMA Frame Size
SSFSP-5A	.6245 / .6240	1-15/16	56C	56C
SSFSP-5	.8745 / .8740	2	140TC	56C



B

Section Contents

Product Reference Guide 68

Numbering System / How to Order 68-71

Selection Procedure. 71

Assemblies and Mounting Positions 72-75

Recommended Lubricants 76

Output rpm Selection Tables. 77-81

Reducer Dimensions 82-101

For Other Boston Gear Reducers, Contact Factory.

700 Series Double Reduction Catalog Number & Reference Guide

700 Series Right Angle Worm Gearbox - Double Reduction

SBK C H QC HMA 7 38 B – 300 K E Z T – B5 –

Input Shaft Style
Blank–Solid Projecting Input Shaft
F- Quill Style Motor Flange
RF – Coupling Style Motor Flange
QC – *Quick Connect* Motor Flange (close coupled)

7 – 700 Series

Exact Gear Ratio
Ratio to 1

100	1200
150	1800
200	2000
300	2400
400	3000
600	3600
900	

Check Catalog – Or consult factory for availability

Vent
Blank–Standard Vent
P – Pressure Vent (5 psi)
Z – Posivent (sealed)

Endcap
(732-760 only)
E – Endcap (standard)

Output Shaft Style
Blank–Solid Output Shaft
H – *BostMount* Hollow Output (setscrews both sides, bore size selectable)
S – Hollow Output (setscrews one side, bore size fixed)

Center Distance (inches)
13 – 1.33
18 – 1.75
21 – 2.06
26 – 2.62
30 – 3.00
32 – 3.25
38 – 3.75
52 – 5.13
60 – 6.00

Lubrication
Blank–No lubrication
K – Klubersynth UH1 6-460
S – Mobil SHC 634
X – Mobil 600W

Input Oil Seal
Blank– Standard Seal
T – Two Standard Input Seals

Flange/Carrier/Base Material
Blank–Standard material
C – Cast Iron

Reducer Material/Paint
Blank–Cast Iron, Std. Gray paint
BK – Cast Iron, White *BostKleen* paint
SBK – Cast Iron, Stainless *BostKleen* paint
SS – Stainless Steel material- no paint

Reduction Type
WA – Double Reduction Parallel Shafts
WB – Double Reduction Parallel Shafts
WC – Double Reduction Right Angle Shafts
WD – Double Reduction Right Angle Shafts
HMA – Helical Multiplier 12 O'clock
HMB – Helical Multiplier 6 O' clock
HMC – Helical Multiplier 3 O'clock
HMD – Helical Multiplier 9 O'clock
WP – Planetary Torque Mulitplier

Base/Mounting Attachment*
Blank – No base kit required
A & B – Horizontal bases
C & E – Vertical High bases
D & F – Vertical Low bases
R/L – *BostMount* Output Bracket
X – Input Vertical Up
Y – Input Vertical Down
V/W – Hollow O/P with base
M/N – Hollow O/P with CFA
*See catalog for mounting configurations

NEMA Motor Mounting

BORE CODE	NEMA MOUNTING	INPUT BORE	KEYWAY
B4	42CZ	.500"	1/8 x 1/16
B5	56C	.625	3/16 x 3/32
B7	140TC/180C	.875	3/16 x 3/32
B9	180TC/210C	1.125	1/4 x 1/8
B11	210TC/250UC	1.375	5/16 x 5/32
B13	250TC	1.625	3/8 x 3/16

Blank Solid Input Shaft (No Flange)

700 Series Double Reduction Flanged & Non-Flanged Reducers

Ordering Information - Page 70
Selection/Rating Information - Pages 71, 77-81
Lubrication - Page 76
Motor Selection - Pages 341 and 342



FWA/QCWA700 BASIC
Dimensions - Page 82



FWC/QCWC700 BASIC
Dimensions - Page 87



WA700 BASIC
Dimensions - Page 92



WC700 BASIC
Dimensions - Page 97



HFWA/HQCWA700 BASIC
Dimensions:
HFWA/QCWA700 - Page 83
HFWA/QCWA700R/L - Page 84
HFWC/QCWC700 - Page 87
HFWC/QCWC700R/L - Page 89



SFWA700 BASIC
Dimensions:
SFWA700 - Page 85
SFWA700V - Page 86
SFWC700 - Page 90
SFWC700V/W - Page 91



HWA/HWC700 BASIC
Dimensions:
HWA700 - Page 92
HWA700R - Page 94
HWC700 - Page 98
HWC700R/L - Page 99



SWA/SWC700 BASIC
Dimensions:
SWA700 - Page 95
SWA700V - Page 96
SWC700 - Page 100
SWC700V/W - Page 101

HS 1 – P24 –

BostMount Output Bore Code

For H Series Only Specified in 1/16" increments.

Example: 1 1/4" = P20

5/8 – **P10**	1-1/2 – **P24**
3/4 – **P12**	1-5/8 – **P26**
7/8 – **P14**	1-11/16 – **P27**
15/16 – **P15**	1-3/4 – **P28**
1 – **P16**	1-7/8 – **P30**
1-1/16 – **P17**	1-15/16 – **P31**
1-1/8 – **P18**	2 – **P32**
1-3/16 – **P19**	2-1/8 – **P34**
1-1/4 – **P20**	2-3/16 – **P35**
1-5/16 – **P21**	2-1/4 – **P36**
1-3/8 – **P22**	2-7/16 – **P39**
1-7/16 – **P23**	3-7/16 – **P55**

See catalog page 128 for availability by center distance.
Consult factory for metric bores

Mounting Positions

Blank -No Lubrication Supplied

For Factory Prelubrication Indicate Mounting Position

1 – Standard Mounting(Worm over)
2-6 – Refer to Mounting Positions on catalog page 72 and 73.

Output Shaft Assembly

Double Reduction WA and WB	
G	Output Projection Opposite Input
H	Double Output Projection
J	Output Projection Same Side as Input
GS	Stainless Output Projection Opposite Input
HS	Stainless Double Output Projection
JS	Stainless Output Projection Same Side as Input
Double Reduction WA and WB Mirrored Design	
K	Output Projection Opposite Input
L	Double Output Projection
M	Output Projection Same Side as Input
KS	Stainless Output Projection Opposite Input
LS	Stainless Double Output Projection
MS	Stainless Output Projection Same Side as Input
Double Reduction WC and WD (When facing Input)	
G	Output Projection Down
H	Double Output Projection
J	Output Projection Upward
GS	Stainless Output Projection Down
HS	Stainless Double Output Projection
JS	Stainless Output Projection Upward
Double Reduction WC and WD (When facing Input) Mirrored Design	
K	Output Projection Down
L	Double Output Projection
M	Output Projection Upward
KS	Stainless Output Projection Down
LS	Stainless Double Output Projection
MS	Stainless Output Projection Upward

Clutch/Brake

CMBA56U-6 –

Common C-Face Brakes Installed

115/230 VAC 60hz	Ft-Lb	Bore Code
CMBA56R-3	3	B5
CMBA56R-6	6	B5
CMBA140TR-6	6	B7

208-230/460 VAC 60hz	Ft-Lb	Bore Code
CMBA56U-3	3	B5
CMBA56U-6	6	B5
CMBA140TU-6	6	B7

Other sizes available. See catalog page 349.

Motor

HUTF5/8-IDB – 3

Motor Conduit box Orientation
(When looking at fan end of motor and gearbox is in mounting position #1)

0 – 12 O'clock
3 – 3 O'clock(standard for G & H shaft assemblies)
6 – 6 O'clock
9 – 9 O'clock (standard for J shaft assemblies)

Common C-Face Motors Installed

AC Voltage	Bore Code	115/208-230-1-60	208-230/460-3-60
1/4 HP	B5	**DRTFB**	**DUTFB**
1/3 HP	B5	**ERTFB**	**EUTFB**
1/2 HP	B5	**FRTFB**	**FUTFB**
	B5		**FUT-SS**
	B5		**FUTF-IDB**
3/4 HP	B5	**GRTFB**	**GUTFB**
	B5		**GUT-SS**
	B5		**GUTF-IDB**
1 HP	B5	**HRTF-5/8B**	**HUTF5/8B**
	B5		**HUT5/8-SS**
	B5		**HUTF5/8-IDB**
	B7		**HUTFB**
	B7		**HUT-SS**
	B7		**HUTF-IDB**
1.5 HP	B7		**JUTFB**
	B7		**JUTF-SS**
	B7		**JUTF-IDB**
2 HP	B5		**KUTF5/8B**
	B7		**KUTFB**
	B7		**KUTF-SS**
	B7		**KUTF-IDB**
3 HP	B9		**LUTFB**
	B9		**LUTF-SS**
	B9		**LUTF-IDB**
5 HP	B9		**MUTFB**

Other motors available, please see catalog pages 339 to 349.

T – Totally enclosed non-ventilated
TF – Totally enclosed fan cooled
SS – Stainless
IDB – Inverter Duty (10:1 turn down constant torque)
B5 – 56C
B7 – 140TC
B9 – 180TC

B

Double Reduction **Numbering System / How to Order**

Style	Size	Base	Ratio	Lubrication	Vent	Input Seal	NEMA Mounting	Shaft Assembly	Mounting Position	Output Bore Code

Style **Designates reducer or flanged reducer, projecting or hollow output shaft.**

C- Prefix — Designates cast iron flange and base. Standard on motor flanges 3 HP (180TC) and up and all bases except horizontal (710-726).

WA- Double reduction, parallel shaft reducer with projecting output shaft.

HWA- Double reduction, parallel shaft reducer with BostMount hollow output shaft.

SWA- Double reduction, parallel shaft reducer with hollow output shaft.

WC- Double reduction, right angle shaft reducer with projecting output shaft.

HWC- Double reduction, right angle shaft reducer with BostMount hollow output shaft.

SWC- Double reduction, right angle shaft reducer with hollow output shaft.

FWA- Double reduction, parallel shaft flanged reducer (Quill types) with projecting output shaft.

HFWA- Double reduction, parallel shaft flanged reducer (Quill types) with BostMount hollow output shaft.

SFWA- Double reduction, parallel shaft flanged reducer (Quill types) with hollow output shaft.

FWC- Double reduction, right angle shaft flanged reducer (Quill types) with projecting output shaft.

HFWC- Double reduction, right angle shaft flanged reducer (Quill types) with BostMount hollow output shaft.

SFWC- Double reduction, right angle shaft flanged reducer (Quill types) with hollow output shaft.

QCWA- Double reduction, parallel shaft flanged reducer (Coupling types) with projecting output shaft.

HQCWA- Double reduction, parallel shaft flanged reducer (Coupling types) with BostMount hollow output shaft.

QCWC- Double reduction, right angle shaft flanged reducer (Coupling types) with projecting output shaft.

HQCWC- Double reduction, right angle shaft flanged reducer (Coupling types) with projecting output shaft.

SSFWB/SSFWD- Stainless steel double reduction with solid output shaft.

SSHFWB/SSHFWD- Stainless steel double reduction with hollow output shaft.

Size **Center distance, rounded off. On double reduction models this is the Center Distance of the second reduction.**

713 - 1.33	**726** - 2.62	**738** - 3.75
718 - 1.75	**730** - 3.00	**752** - 5.16
721 - 2.06	**732** - 3.25	**760** - 6.00

Base **Base positions relative to output shaft. Shipped separately as Base Kits. See Page 129.**

Blank - No Base Kit
A,B - Horizontal Bases
C,D,E,F - Vertical Bases
R/L - BostMount Output Bracket
X - Input Vertical Up
Y - Input Vertical Down
V,W - Flanged bases, available on "S" hollow shaft models only. Factory assembled.
M,N- Hollow Output with CFA

Ratio **See Selection Tables for available ratios**

Lubrication **Optional prelubrication.**

Blank - No lubrication supplied.
K - Klubersynth UH1 6-460
S – Mobil SHC 634
X – Mobil 600W

When specifying optional prelubrication, include mounting position after shaft assembly.

Vent **Pressure Relief.**

Blank – Standard Vent
P – 5 PSI Vent
Z – PosiVent® Pressure Compensationg Bladder
When specifying optional prelubrication, include mounting position after shaft assembly.

Input Oil Seal

Blank – Standard Seal
T – Double Input Seals. Recommended for mounting positions 2, 3, 4, 6

NEMA Mounting **Designates flange size and input bore diameter. Flanged reducers only. Leave blank for projecting input reducers.**

Bore Code	NEMA Mounting	Input Bore	Keyway
B4	42CZ	.500"	1/8 x 1/16
B5	56C	.625	3/16 x 3/32
B7	140TC/180C	.875	3/16 x 3/32
B9	180TC/210C	1.125	1/4 x 1/8

See page 252 for Mounting Dimensions.

Shaft Assembly **Assembly shaft arrangements. See Assemblies, Pages 72-75.**

G* - Standard assembly
H* - Double output shaft projection.
J* - Opposite to standard.

* Add "**S**" after letter for Stainless Steel Shaft (ex. **GS**, **HS**, **JS**)

Mounting Position **Designates the position of oil and vent plugs with respect to mounting.**

Blank - For units not supplied prelubricated.
1-6 - See Pages 58-61.

Output Bore Code **Specified in 1/16" increments. See Page 114 for complete offering. Example: 1 1/4" = P20 Required for H Series only.**

How to Order

When ordering reducers please include code letters for Style, Size, Base (if required), Ratio, Lubrication (if required), NEMA Mounting (if flanged reducer), Shaft Assembly and Motor (if required).

EXAMPLE: Required size, 726 Quill types flanged double reduction reducer, 100 to 1 ratio, 5/8" input bore, parallel shafts, standard assembly, no base.

Motor to be 3/4 HP, 1750 RPM, 230/460 Volt, 3 Phase, 60 cycle, Open Dripproof.

FWA | 726 | – | 100 | – | B5 | – | G | – | GUB3

ORDER: FWA726-100-B5-G-GUB3

NOTE: For other assembly configurations, contact factory.

To properly select a speed reducer, the following application information must be known:

Input RPM (Ratio)
Output Torque
Input Horsepower
Service Factor

Non-Motorized Speed Reducer

1. Determine service factor from table below.
2. Determine design horsepower.
   Design Horsepower =
   Application Load x Service Factor
3. Select a speed reducer size that satisfies output RPM, service class and/or output torque requirements.
4. Check overhung load capacity.

Motorized Speed Reducer

1. Determine service class from table below
2. Select a reducer size that satisfies output RPM, service class and/or output torque requirements.
3. Check overhung load capacity.

Service Factor Table

AGMA Class of Service	Service Factor	Operating Conditions
I	1.00	Moderate Shock-not more than 15 minutes in 2 hours.
		Uniform Load-not more than 10 hours per day.
II	1.25	Moderate Shock-not more than 10 hours per day.
		Uniform Load-more than 10 hours per day.
	1.50	Heavy Shock-not more than 15 minutes in 2 hours.
		Moderate Shock-more than 10 hours per day.
III	1.75	Heavy Shock-not more than 10 hours per day.
	2.00	Heavy Shock-more than 10 hours per day.

For complete AGMA Service Factors and Load Classifications, see Engineering Section, Pages 355 and 356.

Double Reduction Selection Tables

Capacity selection tables on Pages 77-81 list catalog numbers and ratios of both reducers and gearmotors. Output RPM, output torque and horsepower are all based on 1750 RPM input. For motorized reducer selection, select the desired output RPM and refer to the gearmotor ratings column. For non-motorized reducers, refer to the reducer gear capacity columns. For the desired HP, torque and service factor that satisfies your requirements, a 700 Series basic reducer number will be indicated. For complete catalog part number, descriptions and options, refer to Page 70.

Overhung Load

If the output shaft of a speed reducer is connected to the driven machine by other than a flexible coupling, an overhung load is imposed on the shaft. This load may be calculated as follows:

$$OHL = \frac{2TK}{D}$$

OHL = Overhung Load (LB.)

T = Shaft Torque (LB.IN.)

D = PD of Sprocket, Pinion or Pulley (IN.)

K = Load Connection Factor

Load Connection Factor

Sprocket or Timing Belt 1.00

Pinion and Gear Drive 1.25

Pulley and V-Belt Drive. 1.50

Pulley and Flat Belt Drive 2.50

An overhung load greater than permissible load value may be reduced to an acceptable value by the use of a sprocket, pinion or pulley or a larger PD. Relocation of the load closer to the center of reducer will also increase OHL capacity.

Permissible overhung loads and output shaft thrust loads are listed for each reducer in the tables on Pages 30-33.

Maximum Input Speeds

W713, W718, W721, W726. . . . . .4500 RPM

W730 through W760 . . . . . .3600 RPM

NOTE: Horsepower ratings for 1750 RPM should NOT be exceeded when operating at higher input speeds.

Ratings shown reflect maximum gear capacity with Klubersynth UH1 6-460 lubricant. The use of other lubricants may reduce ratings by up to 15%.

Ratings are mechanical not thermal.

B

Flanged Reducer **Assemblies and Mounting Positions**

B

Assemblies–FWA/QCWA700 Series

Standard assemblies define output shaft (slow speed) projection with respect to input shaft (high speed) and mounting surface.

Types “A” and “B” are horizontal bases.

Types “C” and “E” are vertical high bases and Types “D” and “F” are vertical low bases.

Basic models and separate base kits are supplied unless otherwise specified. Assembly “H” available at a slight additional charge.

See Page 70 for complete ordering instructions.

Input may rotate clockwise or counter clockwise.

For other configurations not shown, contact factory.

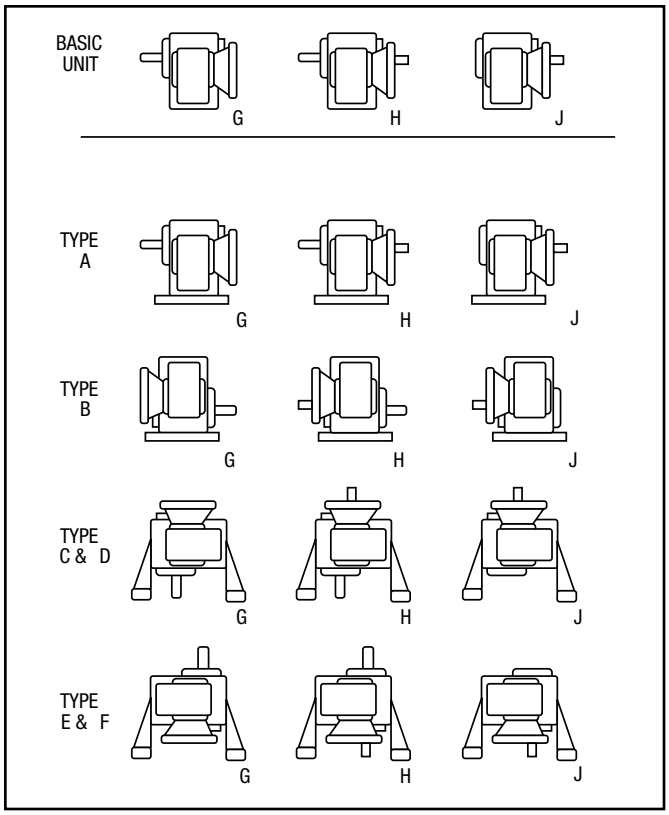

Mounting Positions – FWA/QCWA – HFWA/HQCWA – SFWA700 Series

Standard assemblies are for Position 1. The design permits any types of assembly to be mounted in any position shown by the proper location of the vented oil filler, level and drain plugs, at the time of installation.

For other than Position 1, order standard and relocate vented oil filler, level and drain plugs.

Vented oil filler plug must be located in the uppermost position.

For all mounting positions where the vented filler plug is located in a horizontal plane, the vent hole must point upward.

For all mounting positions where the vented filler plug is located in a vertical plane, the vent hole must point toward center of housing.

For production orders Boston Gear will assemble units for the specified mounting position desired at no additional charge.

WARNING: The lubricant will flow between the large gearbox and the small gearbox. When filling with oil, make sure both gearboxes are full to the correct/same level. It is strongly recommended the oil level in each gearbox is verified after a short run.

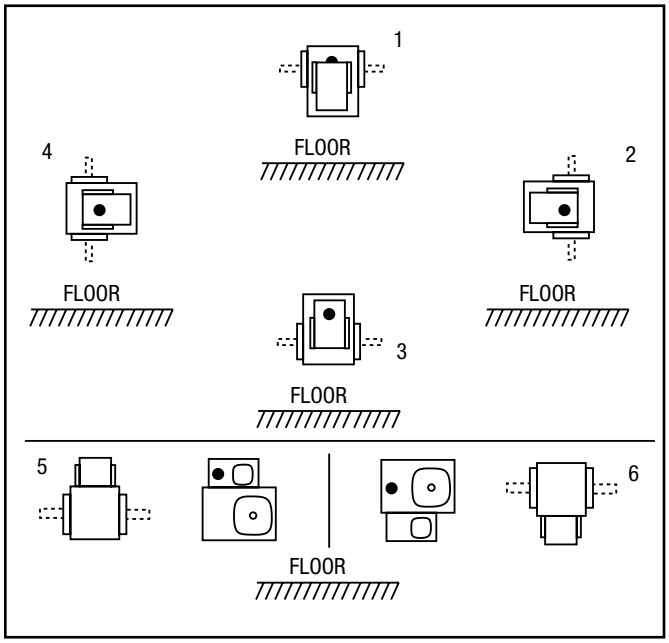

- Indicates proper oil level.

CAUTION

When ordering speed reducers pre-lubricated, the Mounting Position must be indicated to ensure proper oil level.

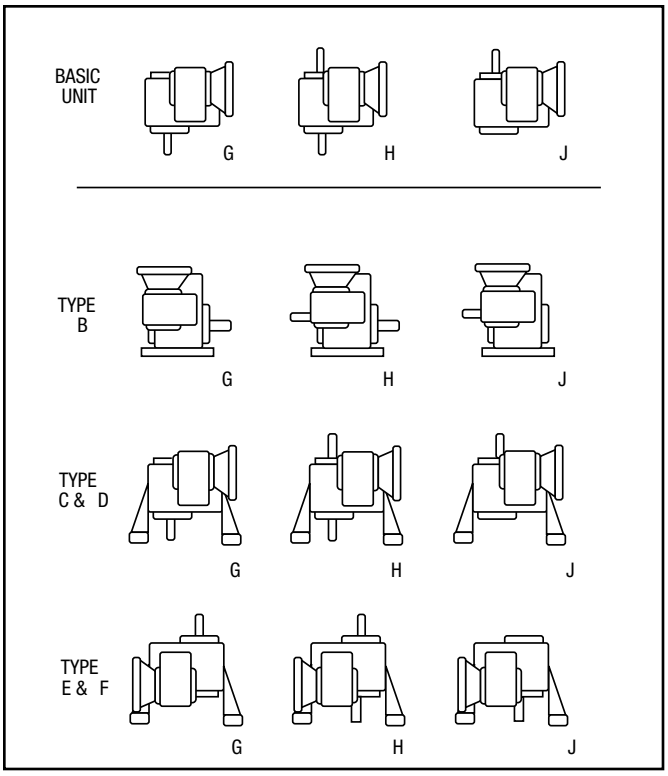

Assemblies–FWC/QCWC700 Series

Standard assemblies define output shaft (slow speed) projection with respect to input shaft (high speed) and mounting surfaces.

Types “B” is a horizontal base.

Types “C” and “E” are vertical high bases and types “D” and “F” are vertical low bases.

Basic models and separate base kits are supplied unless otherwise specified. Assembly “H” available at a slight additional charge.

See Page 70 for complete ordering instructions.

Input may rotate clockwise or counter clockwise.

For other configurations not shown, contact factory.

B

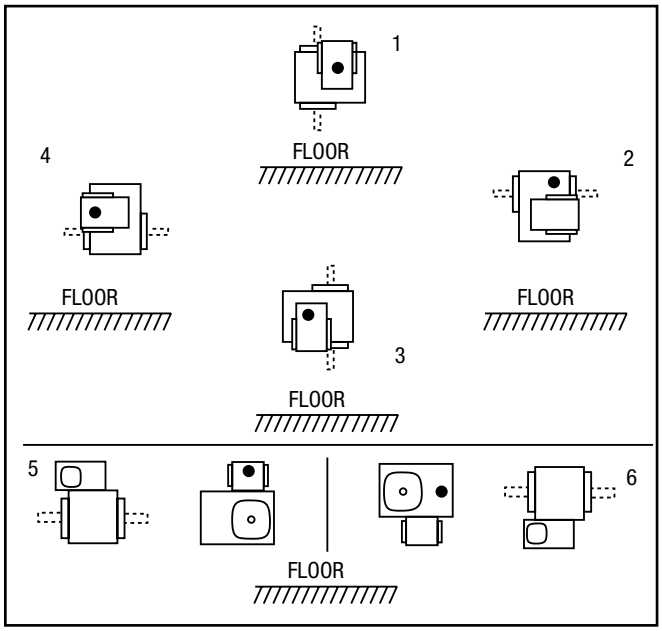

- Indicates proper oil level.

CAUTION

When ordering speed reducers pre-lubricated, the Mounting Position must be indicated to ensure proper oil level.

Mounting Positions – FWC/QCWC – HFWC/HQCWC – SFWC700 series

Standard assemblies are for Position 1. The design permits any types of assembly to be mounted in any position shown by the proper location of the vented oil filler, level and drain plugs, at the time of installation.

For other than Position 1, order standard and relocate vented oil filler, level and drain plug.

Vented oil filler plug must be located in the uppermost position.

For all mounting positions where the vented filler plug is located in a horizontal plane, the vent hole must point upward.

For all mounting positions where the vented filler plug is located in a vertical plane, the vent hole must point toward center of housing.

For production orders Boston Gear will assemble units for the specified mounting position desired at no additional charge.

WARNING: The lubricant will flow between the large gearbox and the small gearbox. When filling with oil, make sure both gearboxes are full to the correct/same level. It is strongly recommended the oil level in each gearbox is verified after a short run.

Assemblies–WA700 Series

Standard assemblies define output shaft (slow speed) projection with respect to input shaft (high speed) and mounting surfaces.

Types “A” and “B” are horizontal bases.

Types “C” and “E” are vertical high bases and types “D” and “F” are vertical low bases.

Basic models and separate base kits are supplied unless otherwise specified. Assembly “H” available at a slight additional charge.

See Page 70 for complete ordering instructions.

Input may rotate clockwise or counter clockwise. Arrows indicate relative rotation.

FOR OTHER CONFIGURATIONS NOT SHOWN, CONTACT FACTORY.

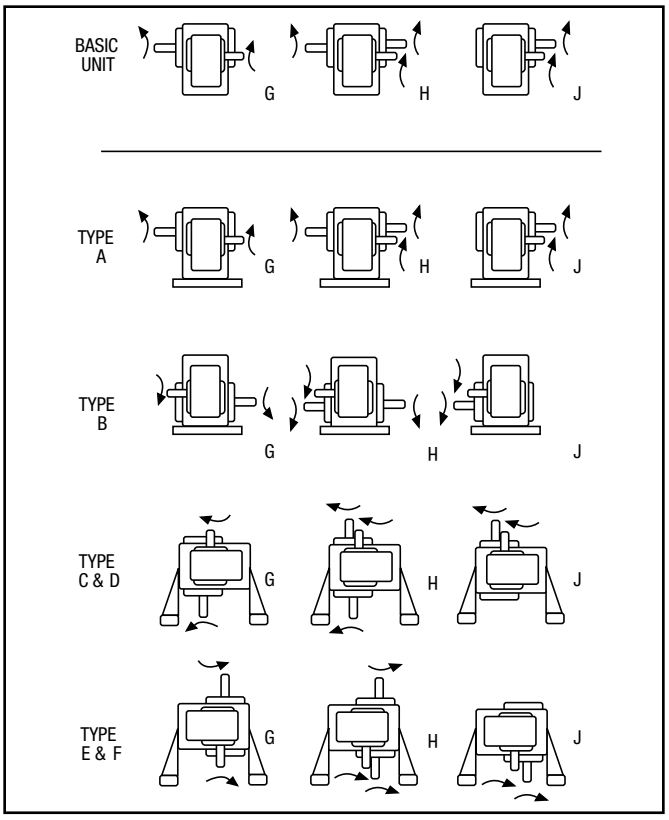

Mounting Positions – WA – HWA – SWA 700 Series

Standard assemblies are for Position 1. The design permits any types of assembly to be mounted in any position shown by the proper location of the vented oil filler, level and drain plugs, at the time of installation.

For other than Position 1, order standard and relocate vented oil filler, level and drain plug.

Vented oil filler plug must be located in the uppermost position.

For all mounting positions where the vented filler plug is located in a horizontal plane, the vent hole must point upward.

For all mounting positions where the vented filler plug is located in a vertical plane, the vent hole must point toward center of housing.

For production orders Boston Gear will assemble units for the specified mounting position desired at no additional charge.

WARNING: The lubricant will flow between the large gearbox and the small gearbox. When filling with oil, make sure both gearboxes are full to the correct/same level. It is strongly recommended the oil level in each gearbox is verified after a short run.

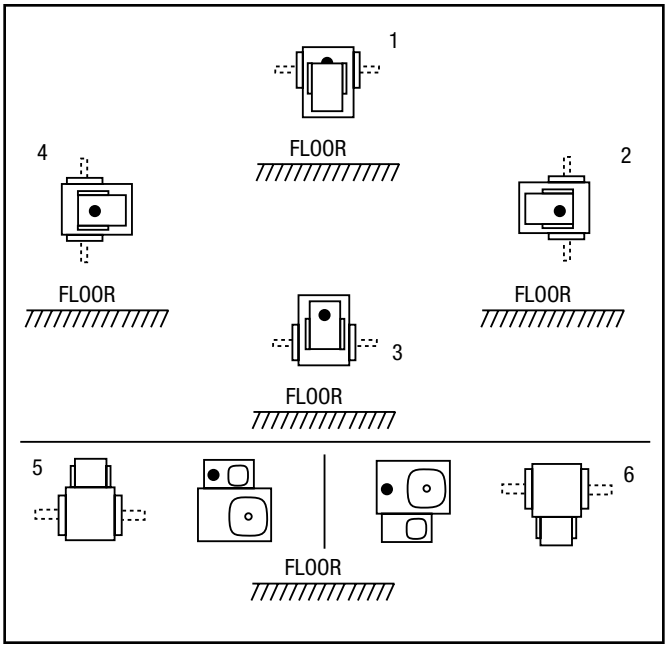

- Indicates proper oil level.

CAUTION

When ordering speed reducers pre-lubricated, the Mounting Position must be indicated to ensure proper oil level.

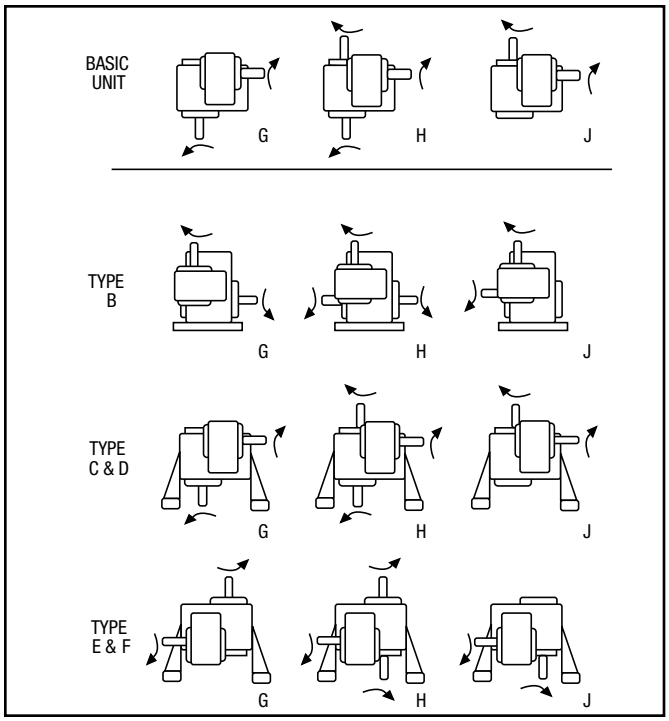

Assemblies–WC700 Series

Standard assemblies define output shaft (slow speed) projection with respect to input shaft (high speed) and mounting surfaces.

Types “B” is a horizontal base.

Types “C” and “E” are vertical high bases and types “D” and “F” are vertical low bases.

Basic models and separate base kits are supplied unless otherwise specified. Assembly “H” available at a slight additional charge.

See Page 70 for complete ordering instructions.

Input may rotate clockwise or counter clockwise. Arrows indicate relative rotation.

FOR OTHER CONFIGURATIONS NOT SHOWN, CONTACT FACTORY.

B

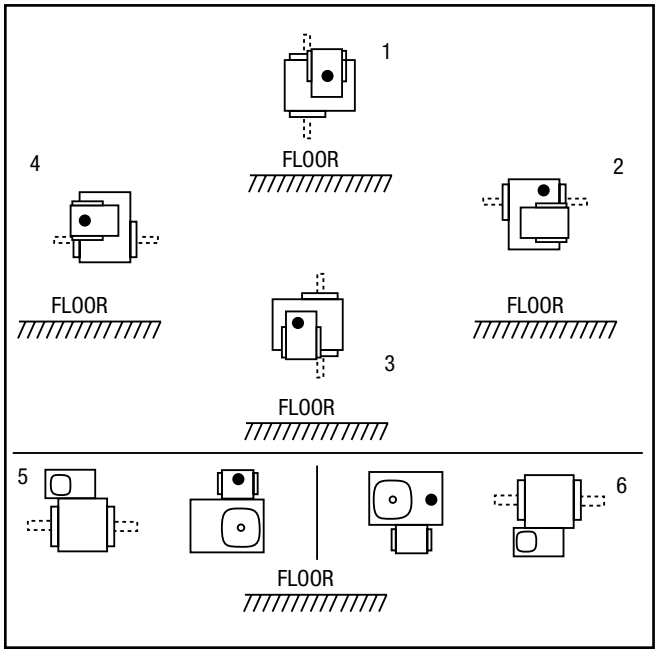

- **Indicates proper oil level.**

CAUTION

When ordering speed reducers pre-lubricated, the Mounting Position must be indicated to ensure proper oil level.

Mounting Positions – WC – HWC – SWC 700 Series

Standard assemblies are for Position 1. The design permits any types of assembly to be mounted in any position shown by the proper location of the vented oil filler, level and drain plugs, at the time of installation.

For other than Position 1, order standard and relocate vented oil filler, level and drain plug.

Vented oil filler plug must be located in the uppermost position.

For all mounting positions where the vented filler plug is located in a horizontal plane, the vent hole must point upward.

For all mounting positions where the vented filler plug is located in a vertical plane, the vent hole must point toward center of housing.

For production orders Boston Gear will assemble units for the specified mounting position desired at no additional charge.

WARNING: The lubricant will flow between the large gearbox and the small gearbox. When filling with oil, make sure both gearboxes are full to the correct/same level. It is strongly recommended the oil level in each gearbox is verified after a short run.

700 Series **Recommended Lubricants**

The following table indicates the types and viscosity of lubricants suitable for reducers operating at various temperatures.

Lubrication and maintenance instructions are provided with each speed reducer. These instructions should be followed for best results. It is important that the correct types of oil be used since many oils are not suitable for the lubrication of gears. Various types of gearing require different types of lubricants.

The lubricant must remain free from oxidation and contamination by water or debris, since only a very thin film of oil stands between efficient operation and failure. To assure long service life, the reducer should be periodically drained (preferably while warm) and refilled to the proper level with a recommended gear oil.

Under normal environmental conditions oil changes are suggested after the initial 250 hours of operation and thereafter at regular intervals of 2500 hours or every 6 months.

Synthetic lubricants will allow extended lubrication intervals due to its increased resistance to thermal and oxidation degradation. It is suggested that the initial oil change be made at 1500 hours and, thereafter, at 5000 hour intervals.

During the initial period of operation, higher than normal operating temperatures may be seen. This is due to the initial break-in of the gear set. The temperature of Single Reduction Worm Gear Reducers may reach approximately 225°F.

B

ENCLOSED WORM GEAR REDUCERS

Ambient (Room) Temperature	Recommended Oil (or equivalent)	Viscosity Range SUS @ 100°F	Oil Type	ISO Viscosity Grade No.†
–20° to 225°F** (–29° to 107°C)	Klubersynth UH1 6-460* Synthetic	1950/2500	PAG	460
–30° to 225°F** (–34° to 107°C)	"Mobil SHC634 Synthetic"	1950/2500	PAO	320/460

WORM GEAR LUBRICANT AVAILABLE FROM BOSTON GEAR

TYPES	Klubersynth UH1 6-460	Mobil SHC634
SIZE	QUART	QUART
ITEM CODE	65159	51493

CAUTION: Relubricate more frequently if drive is operated in high ambient temperatures or unusually contaminated atmosphere. High loads and operating temperatures will also require more frequent lubrication.

* Synthetic recommendation is exclusively for Klubersynth UH1 6-460.

† Other lubricants corresponding to AGMA/ISO numbers are available from all major oil companies. See Page 135 for lubricant interchange.

** The Klubersynth UH1 6-460 lubricant will perform at temperatures considerably higher than 225°F. However, the factory should always be consulted prior to operating at higher temperatures as damage may occur to oil seals and other components.

Mounting Positions For Double Reduction Models Only

The variety of mounting possibilities for double-reduction drives makes it impractical to illustrate positions for these models. In general, the vent filler is at the uppermost plug position, and the drain plug at the lowest possible position. The oil level must be at the approximate centerline of the uppermost gear, with the lower box completely full.

The first and second reduction housings are open to one another allowing free flow of lubricant. Levels should be checked frequently on new installation to assure proper levels are maintained.

WARNING: The lubricant will flow between the large gearbox and the small gearbox. When filling with oil, make sure both gearboxes are full to the correct/same level. It is strongly recommended the oil level in each gearbox is verified after a short run.

WARNING: Different oil types should not be mixed. For example Klubersynth UH1 6-460 is not compatible with Mobil SHC634.

700 Series Double Reduction Output RPM & Capacity Selection Tables

@ 1750 RPM Input

Output RPM	Ratio#	Non-Flanged Reducers				Gearmotor								Motors**
		Gear Capacity				Ratings			Available Styles†					Cat. Nos.
		Output Torque (lb.in.)	HP		Size*	Motor HP	Output Torque (lb.in.)	Service Class	F	QC	HF	SF	HQC	Bore Code	230/460 VAC 3 Phase 60 Hz
			Input	Output											
17.5	100 TO 1	275	.16	.076	**W713-100**	**1/6** **1/6**	275 275	I I						B4 B5	ACUT CUTF
		570	.23	.16	**W718-100**	**1/4** **1/4** **1/6** **1/6**	570 570 414 414	I I II II						B4 B5 B4 B5	ADUTF DUTF ACUT CUTF
		910	.41	.25	**W721-100**	**1/2** **1/3** **1/4** **1/6**	910 750 585 390	I II II III						B5 B5 B5 B5	FUTF EUTF DUTF CUTF
		1785	.75	.50	**W726-100**	**3/4** **1/2** **1/3**	1785 1206 804	I II III						B5 B5 B5	GUTF FUTF EUTF
		3250	1.24	.90	**W730-100**	**1** **3/4** **1/2**	2844 2138 1426	I II III						B5 B5 B5	HUTF-5/8 GUTF FUTF
		3450	1.33	.96	**W732-100**	**1-1/2** **1** **3/4**	3450 2592 1944	I II III						B7 B5 B5	JUTF HUTF-5/8 GUTF
		4910	1.84	1.36	**W738-100**	**2** **1-1/2** **1**	4910 3995 2664	I II III						B7 B7 B7	KUTF JUTF HUTF
		8000	2.97	2.22	**W752-100**	**3** **2** **1-1/2**	8000 5400 4050	I II III						B9 B7 B7	LUTF KUTF JUTF
		16500	5.75	4.58	**W760-100**	**5** **3**	14200 8500	I III						B9 B9	MUTF LUTF
11.7	150 TO 1	280	.13	.052	**W713-150**	**1/6** **1/6**	280 280	I I						B4 B5	ACUT CUTF
		580	.23	.11	**W718-150**	**1/4** **1/4** **1/6** **1/6**	580 580 433 433	I I II II						B4 B5 B4 B5	ADUTF DUTF ACUT CUTF
		940	.30	.17	**W721-150**	**1/3** **1/4** **1/6**	940 770 513	I II III						B5 B5 B5	EUTF DUTF CUTF
		1840	.56	.34	**W726-150**	**3/4** **1/2** **1/3** **1/4**	1840 1647 1095 823	I I II III						B5 B5 B5 B5	GUTF FUTF EUTF DUTF
		3523	.98	.65	**W730-150**	**3/4** **1/2**	2592 1728	II III						B5 B5	GUTF FUTF
		3600	1.00	.67	**W732-150**	**1** **3/4** **1/2**	3600 2713 1800	I II III						B5 B5 B5	HUTF-5/8 GUTF FUTF

* Add “A” (for PARALLEL SHAFTS) or “C” (for RIGHT ANGLE SHAFTS) after “W” in Model Numbers. See Numbering System, Page 70.
** Totally Enclosed, Fan Cooled. For complete motor Catalog Numbers and additional motors, see Pages 343 and 346.
† Shaded areas denote which styles are available for a given center distance and ratio.
# Other ratios avialable. Contact factory for information.

B

700 Series Double Reduction Output RPM & Capacity Selection Tables

@ 1750 RPM Input

Output RPM	Ratio#	Non-Flanged Reducers				Gearmotor								Motors**
		Gear Capacity				Ratings			Available Styles†					Cat. Nos.
		Output Torque (lb.in.)	HP		Size*	Motor HP	Output Torque (lb.in.)	Service Class	F	QC	HF	SF	HQC	Bore Code	230/460 VAC 3 Phase 60 Hz
			Input	Output											
11.7	150 TO 1	5100	1.35	.94	**W738-150**	**1-1/2** **1** **3/4**	5100 3725 2974	I II III						B7 B7 B5	JUTF HUTF GUTF
		11750	2.99	2.18	**W752-150**	**3** **2** **1-1/2**	11750 7884 5913	I II III						B9 B7 B7	LUTF KUTF JUTF
		17000	4.22	3.15	**W760-150**	**5** **3** **2**	17000 11200 7992	I II III						B9 B9 B9	MUTF LUTF KUTF
8.8	200 TO 1	320	.12	.045	**W713-200**	**1/6** **1/6**	320 320	I I						B4 B5	ACUT CUTF
		660	.19	.09	**W718-200**	**1/4** **1/4**	660 660	I I						B4 B5	ADUTF DUTF
		990	.25	.14	**W721-200**	**1/4** **1/6**	990 720	I II						B5 B5	DUTF CUTF
		1875	.47	.26	**W726-200**	**1/2** **1/3** **1/4**	1875 1440 1080	I II III						B5 B5 B5	FUTF EUTF DUTF
		3477	.76	.48	**W730-200**	**3/4** **1/2** **1/4**	3402 2268 1134	I III III						B5 B5 B5	GUTF FUTF DUTF
		3800	.81	.53	**W732-200**	**3/4** **1/2** **1/3**	3510 2340 1560	I II III						B5 B5 B5	GUTF FUTF EUTF
		5500	1.14	.77	**W738-200**	**1** **3/4** **1/2**	4824 3618 2412	I II III						B5 B5 B5	HUTF-5/8 GUTF FUTF
		12250	2.40	1.70	**W752-200**	**3** **2** **1**	12250 10080 5040	I II III						B9 B7 B5	LUTF KUTF HUTF-5/8
		18000	3.43	2.50	**W760-200**	**5** **3** **2** **1-1/2**	18000 15768 10512 7884	I I II III						B9 B9 B7 B7	MUTF LUTF KUTF JUTF
5.8	300 TO 1	335	.10	.031	**W713-300**	**1/6** **1/6**	335 335	I I						B4 B5	ACUT CUTF
		690	.16	.063	**W718-300**	**1/6** **1/6**	690 690	I I						B4 B5	ACUT CUTF
		1025	.20	.094	**W721-300**	**1/4** **1/6**	1025 900	I I						B5 B5	DUTF CUTF
		1950	.37	.18	**W726-300**	**1/3** **1/4** **1/6**	1800 1350 900	I II III						B5 B5 B5	EUTF DUTF CUTF
		3612	.57	.33	**W730-300**	**1/2** **1/3** **1/4**	3132 2088 1566	I II III						B5 B5 B5	FUTF EUTF DUTF
		3950	.61	.36	**W732-300**	**3/4** **1/2** **1/3**	3950 2700 1800	I II III						B5 B5 B5	GUTF FUTF EUTF

* Add “A” (for PARALLEL SHAFTS) or “C” (for RIGHT ANGLE SHAFTS) after “W” in Model Numbers. See Numbering System, Page 70.
** Totally Enclosed, Fan Cooled. For complete motor Catalog Numbers and additional motors, see Pages 343 and 346.
† Shaded areas denote which styles are available for a given center distance and ratio.
# Other ratios avialable. Contact factory for information.

700 Series Double Reduction Output RPM & Capacity Selection Tables

@ 1750 RPM Input

Output RPM	Ratio#	Non-Flanged Reducers				Gearmotor								Motors**
		Gear Capacity				Ratings			Available Styles†					Cat. Nos.
		Output Torque (lb.in.)	HP		Size*	Motor HP	Output Torque (lb.in.)	Service Class	F	QC	HF	SF	HQC	Bore Code	230/460 VAC 3 Phase 60 Hz
			Input	Output											
5.8	300 TO 1	5800	.84	.53	**W738-300**	**1** **3/4** **1/2**	5800 4050 2700	I II III						B5 B5 B5	HUTF-5/8 GUTF FUTF
		12500	1.72	1.15	**W752-300**	**2** **1-1/2** **1**	12500 10850 7236	I II III						B7 B7 B5	KUTF JUTF HUTF-5/8
		18500	2.45	1.70	**W760-300**	**3** **2** **1-1/2** **1**	18500 14904 11180 7452	I II II III						B9 B7 B7 B5	LUTF KUTF JUTF HUTF
4.4	400 TO 1	330	.089	.023	**W713-400**	**1/6** **1/6**	330 330	I I						B4 B5	ACUT CUTF
		690	.12	.048	**W718-400**	**1/6** **1/6**	360 360	II II						B4 B5	ACUT CUTF
		1025	.17	.071	**W721-400**	**1/6**	984	I						B5	CUTF
		1950	.31	.14	**W726-400**	**1/4** **1/6**	1620 1080	I III						B5 B5	DUTF CUTF
		3602	.40	.25	**W730-400**	**1/3** **1/4** **1/6**	2856 2142 1428	I II III						B5 B5 B5	EUTF DUTF CUTF
		3900	.48	.27	**W732-400**	**1/2** **1/3** **1/4**	3900 2688 2016	I II III						B5 B5 B5	FUTF EUTF DUTF
		5700	.66	.40	**W738-400**	**3/4** **1/2** **1/3**	5700 4320 2880	I II III						B5 B5 B5	GUTF FUTF EUTF
		12600	1.39	.88	**W752-400**	**1-1/2** **1** **3/4**	12610 9072 6804	I II III						B7 B5 B5	JUTF HUTF-5/8 GUTF
		18430	1.94	1.29	**W760-400**	**2** **1-1/2** **1**	18430 13824 9216	I II II						B7 B7 B7	KUTF JUTF HUTF
2.9	600 TO 1	340	.081	.016	**W713-600**	**1/6** **1/6**	340 340	I I						B4 B5	ACUT CUTF
		710	.095	.032	**W718-600**	**1/6** **1/6**	710 710	I I						B4 B5	ACUT CUTF
		1025	.13	.047	**W721-600**	**1/6**	1025	I						B5	CUTF
		2000	.25	.092	**W726-600**	**1/4** **1/6**	2000 1332	I II						B5 B5	DUTF CUTF
		3717	.32	.17	**W730-600**	**1/4** **1/6**	2862 1908	II III						B5 B5	DUTF EUTF
		4025	.36	.18	**W732-600**	**1/3** **1/4** **1/6**	3600 2700 1800	I II III						B5 B5 B5	EUTF DUTF CUTF

* Add "A" (for PARALLEL SHAFTS) or "C" (for RIGHT ANGLE SHAFTS) after "W" in Model Numbers. See Numbering System, Page 70.
** Totally Enclosed, Fan Cooled. For complete motor Catalog Numbers and additional motors, see Pages 343 and 346.
† Shaded areas denote which styles are available for a given center distance and ratio.
# Other ratios avialable. Contact factory for information.

B

700 Series Double Reduction Output RPM & Capacity Selection Tables

@ 1750 RPM Input

Output RPM	Ratio#	Non-Flanged Reducers				Gearmotor								Motors**
		Gear Capacity				Ratings			Available Styles†					Cat. Nos.
		Output Torque (lb.in.)	HP		Size*	Motor HP	Output Torque (lb.in.)	Service Class	F	QC	HF	SF	HQC	Bore Code	230/460 VAC 3 Phase 60 Hz
			Input	Output											
2.9	600 TO 1	5900	.49	.27	**W738-600**	**1/2** **1/3** **1/4**	5900 3960 2970	I II III						B5 B5 B5	FUTF EUTF DUTF
		13000	1.00	.60	**W752-600**	**1** **3/4** **1/2**	13000 9720 6480	I II III						B5 B5 B5	HUTF-5/8 GUTF FUTF
		19000	1.40	.88	**W760-600**	**1-1/2** **1** **3/4**	19000 13608 10206	I II III						B7 B7 B7	JUTF HUTF GUTF
1.9	900 TO 1	340	.071	.010	**W713-900**	**1/6** **1/6**	340 340	I I						B4 B5	ACUT CUTF
		710	.079	.021	**W718-900**	**1/6** **1/6**	710 710	I I						B4 B5	ACUT CUTF
		1050	.11	.032	**W721-900**	**1/6**	1050	I						B5	CUTF
		2000	.21	.06	**W726-900**	**1/6**	2000	I						B5	CUTF
		3752	.23	.11	**W730-900**	**1/6**	2700	II						B5	CUTF
		4025	.28	.12	**W732-900**	**1/4** **1/6**	3483 2322	I III						B5 B5	DUTF CUTF
		5900	.37	.18	**W738-900**	**1/2** **1/3** **1/4** **1/6**	5900 5292 3969 2646	I I II III						B5 B5 B5 B5	FUTF EUTF DUTF CUTF
		13000	.74	.40	**W752-900**	**3/4** **1/2** **1/3**	13000 8748 5832	I II III						B5 B5 B5	GUTF FUTF EUTF
		19000	1.00	.59	**W760-900**	**1** **3/4** **1/2**	19000 14337 9558	I II III						B5 B5 B5	HUTF-5/8 GUTF FUTF
1.5	1200 TO 1	330	.068	.008	**W713-1200**	**1/6** **1/6**	330 330	I I						B4 B5	ACUT CUTF
		690	.071	.016	**W718-1200**	**1/6** **1/6**	690 690	I I						B4 B5	ACUT CUTF
		1025	.10	.024	**W721-1200**	**1/6**	1025	I						B5	CUTF
		1950	.19	.045	**W726-1200**	**1/6**	1728	I						B5	CUTF
		3650	.19	.084	**W730-1200**	**1/6**	3168	I						B5	CUTF
		3900	.23	.092	**W732-1200**	**1/4** **1/6**	3900 2880	I II						B5 B5	DUTF CUTF
		5700	.31	.13	**W738-1200**	**1/3** **1/4** **1/6**	5700 4536 3024	I II III						B5 B5 B5	EUT DUTF CUTF
		12610	.62	.29	**W752-1200**	**3/4** **1/2** **1/3**	12610 10152 6768	I II III						B5 B5 B5	GUTF FUTF EUTF

* Add “A” (for PARALLEL SHAFTS) or “C” (for RIGHT ANGLE SHAFTS) after “W” in Model Numbers. See Numbering System, Page 70.
** Totally Enclosed, Fan Cooled. For complete motor Catalog Numbers and additional motors, see Pages 343 and 346.
† Shaded areas denote which styles are available for a given center distance and ratio.
# Other ratios avialable. Contact factory for information.

700 Series Double Reduction Output RPM & Capacity Selection Tables

@ 1750 RPM Input

Output RPM	Ratio#	Non-Flanged Reducers				Gearmotor								Motors**
		Gear Capacity				Ratings			Available Styles†					Cat. Nos.
		Output Torque (lb.in.)	HP		Size*	Motor HP	Output Torque (lb.in.)	Service Class	F	QC	HF	SF	HQC	Bore Code	230/460 VAC 3 Phase 60 Hz
			Input	Output											
1.5	1200 TO 1	18430	.81	.43	**W760-1200**	**1** **3/4** **1/2** **1/3**	18430 17172 11448 7632	I II II III						B5 B5 B5 B5	HUTF-5/8 GUTF FUTF EUTF
.97	1800 to 1	900	.082	.013	**W721-1800**	**1/6**	900	I						B5	CUTF
		1775	.16	.027	**W726-1800**	**1/6**	1775	I						B5	CUTF
		3650	.14	.056	**W730-1800**	**1/6**	2880	II						B5	CUTF
		3750	.19	.058	**W732-1800**	**1/6**	3240	I						B5	CUTF
		5400	.24	.083	**W738-1800**	**1/4** **1/6**	5400 3672	I II						B5 B5	DUTF CUTF
		11760	.47	.18	**W752-1800**	**1/2** **1/3** **1/4**	11760 8208 6156	I II III						B5 B5 B5	FUTF EUTF DUTF
		17280	.59	.27	**W760-1800**	**1/2** **1/3**	14900 9936	I III						B5 B5	FUTF EUTF
.88	2000 TO 1	590	.052	.008	**W718-2000**	**1/6**	590	I						B4 B5	ACUT CUTF
		1940	.16	.027	**W726-2000**	**1/6**	1940	I						B5	CUTF
		3600	.13	.055	**W730-2000**	**1/6**	3243	I						B5	CUTF
		3880	.22	.054	**W732-2000**	**1/6**	3600	I						B5	CUTF
		12610	.50	.18	**W752-2000**	**1/2** **1/3** **1/4**	12610 8810 5985	I II III						B5 B5 B5	FUTF EUTF DUTF
		18430	.66	.26	**W760-2000**	**1/2**	14400	II						B5	FUTF
.73	2400 TO 1	900	.053	.010	**W721-2400**	**1/6**	900	I						B5	CUTF
		3600	.11	.042	**W730-2400**	**1/6**	3128	I						B5	CUTF
		5725	.22	.066	**W738-2400**	**1/4** **1/6**	5725 4320	I II						B5 B5	DUTF CUTF
.58	3000 TO 1	1868	.05	.017	**W726-3000**	**1/6**	1800	I						B5	CUTF
		3500	.092	.033	**W730-3000**	**1/6**	3135	I						B5	CUTF
		3750	.14	.035	**W732-3000**	**1/6**	3750	I						B5	CUTF
		11760	.34	.11	**W752-3000**	**1/3** **1/4** **1/6**	11760 8640 5760	I II III						B5 B5 B5	EUTF DUTF CUTF
		17280	.41	.16	**W760-3000**	**1/2** **1/3** **1/4**	17280 12270 8640	I II III						B5 B5 B5	FUTF EUTF DUTF
.49	3600 TO 1	3400	.082	.026	**W730-3600**	**1/6**	3140	I						B5	CUTF
		5400	.17	.041	**W738-3600**	**1/6**	5400	I						B5	CUTF

* Add “A” (for PARALLEL SHAFTS) or “C” (for RIGHT ANGLE SHAFTS) after “W” in Model Numbers. See Numbering System, Page 70.
** Totally Enclosed, Fan Cooled. For complete motor Catalog Numbers and additional motors, see Pages 343 and 346.
† Shaded areas denote which styles are available for a given center distance and ratio.
# Other ratios avialable. Contact factory for information.

700 Series Double Reduction Flanged Reducer Dimensions

FWA700/QCWA700 Series Flanged Quill/Flanged Coupling Types

Basic Models (No Base); Parallel Shafts

FOR ORDERING INFORMATION, see Page 56.

FOR RATING INFORMATION, See Pages 71, 77-81.

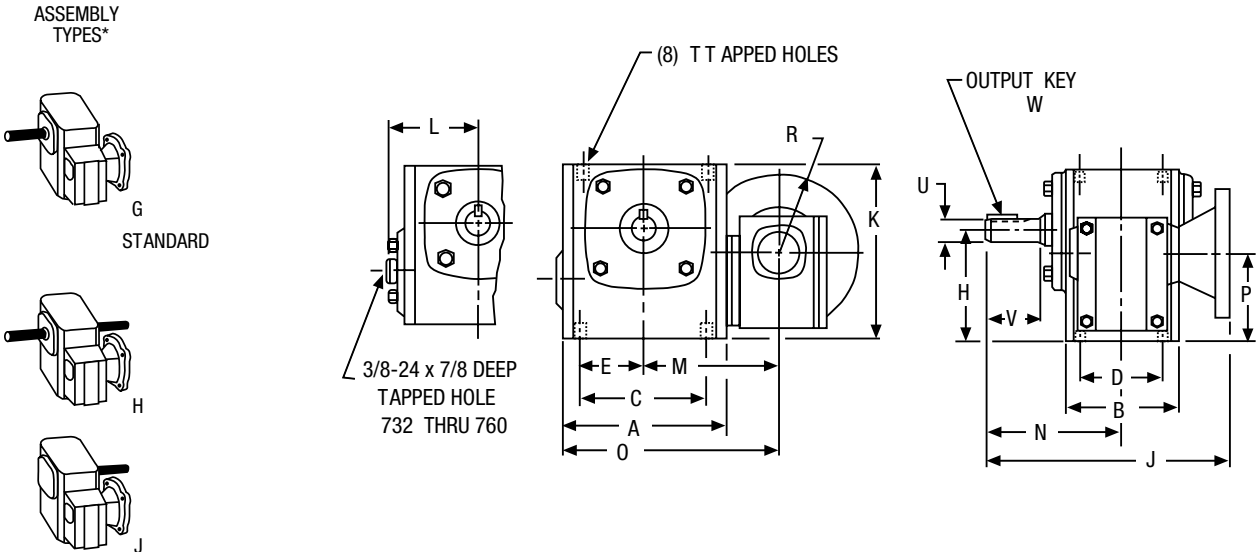

ALL DIMENSIONS IN INCHES

Size	A	B	C	D	E	H	J-NEMA Mounting FWA700 42CZ	FWA700 56C 140TC	FWA700 180TC 210C	QCWA700 42CZ	QCWA700 56C 140TC	QCWA700 180TC 210C	K	L	M	N	O
713	4.25	2.88	3.25	2.00	1.63	2.94	7.16	7.97	—	7.63	8.59	—	4.66	—	3.75	4.00	5.88
718	5.50	3.69	4.19	2.75	2.09	3.69	7.47	8.28	—	7.83	8.79	—	5.75	—	4.44	4.31	7.19
721	6.00	3.81	5.00	2.88	2.50	4.09	—	8.66	—	—	10.73	—	6.38	—	4.94	4.69	7.94
726	7.38	4.44	6.38	3.38	3.19	5.06	—	9.60	—	—	10.14	—	8.00	—	5.66	5.63	9.35
730	8.12	5.25	7.00	4.00	3.50	5.63	—	11.44	—	—	12.20	—	8.88	—	6.12	6.75	10.18
732	9.00	5.88	7.50	4.00	3.75	5.88	—	11.75	—	—	12.51	—	9.38	4.94	6.48	7.06	11.00
738	10.00	6.38	8.50	4.75	4.25	6.56	—	12.81	—	—	13.48	—	10.44	5.50	7.27	7.75	12.27
752	13.13	7.38	11.00	5.81	5.50	8.44	—	14.81	15.25	—	16.45	17.37	13.75	7.19	9.28	9.06	15.84
760	14.50	8.13	12.75	6.38	6.38	10.00	—	—	—	—	18.20	19.13	16.50	7.94	9.56	10.00	16.81

Size	P	R-NEMA Mounting 42CZ	R-NEMA Mounting 56C 140TC	R-NEMA Mounting 180TC	T Tap Size	T Depth	Low Speed Shaft U +.000 -.001	Low Speed Shaft V	Low Speed Shaft W-Key Sq.	Low Speed Shaft W-Key Length	Approx. Weight (Lbs.) FWA	Approx. Weight (Lbs.) QCWA	Horizontal Base Kit No. †
713	2.59	2.16	3.31	—	5/16-18	.50	.625	2.00	3/16	1	16	18	56577
718	2.94	2.16	3.31	—	5/16-18	.50	.875	1.78	3/16	1	27	30	56585
721	3.38	—	3.31	—	3/8-16	.56	1.000	2.09	1/4	1-1/4	37	39	56440
726	3.78	—	3.31	—	3/8-16	.56	1.125	2.62	1/4	1-15/16	62	62	56595
730	4.38	—	3.31	—	7/16-14	.88	1.250	3.25	1/4	2-1/4	85	91	65544
732	4.38	—	3.31	—	7/16-14	.66	1.375	3.25	5/16	2-7/16	104	119	56599
738	4.88	—	3.31	—	1/2-13	.75	1.625	3.50	3/8	2-1/4	142	158	56603
752	5.88	—	3.31	4.63	5/8-11	1.00	2.000	4.16	1/2	2-15/16	247	267	56607
760	7.25	—	3.31	4.63	5/8-11	1.00	2.250	4.56	1/2	3-3/8	—	340	56610

* See Assemblies and Mounting Positions, Page 72.
† For Base Kits, see Page 129.
Note: For base dimensions see Single Reduction Flanged Reducer Dimension pages.

700 Series Double Reduction Flanged Reducer Dimensions

HFWA700/HQCWA700 Series Flanged Quill/Flanged Coupling Types

Basic Models (No Base); Parallel Shafts; Bored to Size Hollow Output

FOR ORDERING INFORMATION, see Page 56.

FOR RATING INFORMATION, See Pages 71, 77-81.

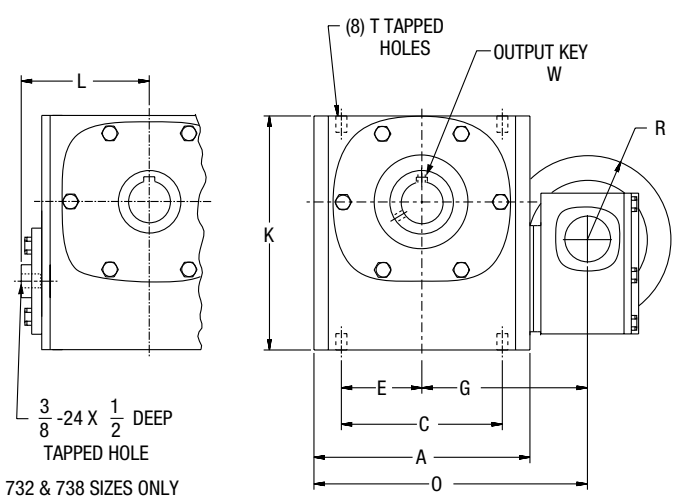

ASSEMBLY TYPES*

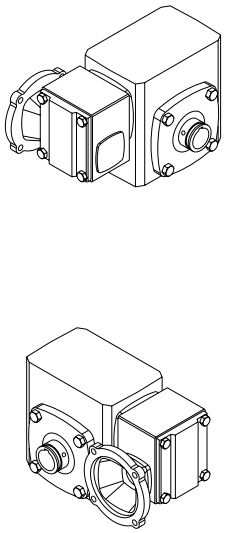

B

ALL DIMENSIONS IN INCHES

Size	A	B	C	D	E	F	G	H	J-NEMA Mounting FWA700 42CZ	J-NEMA Mounting FWA700 56C 140TC	J-NEMA Mounting QCWA700 42CZ	J-NEMA Mounting QCWA700 56C 140TC	K	L	N
713	4.25	2.88	3.25	2.00	1.63	1.00	3.75	2.94	3.16	3.94	4.15	5.01	4.66	—	2.50
718	5.50	3.69	4.19	2.75	2.09	1.38	4.44	3.69	3.16	3.94	4.15	5.01	5.75	—	3.03
721	6.00	3.81	5.00	2.88	2.50	1.44	4.94	4.09	—	3.94	—	5.46	6.38	—	3.22
726	7.38	4.44	6.38	3.38	3.19	1.69	5.66	5.06	—	3.94	—	5.46	8.00	—	3.44
730	8.12	5.25	7.00	4.00	3.50	2.00	6.12	5.63	—	4.69	—	6.29	8.88	—	4.19
732	9.00	5.88	7.50	4.00	3.75	2.00	6.48	5.88	—	4.69	—	6.29	9.38	4.94	4.31
738	10.00	6.38	8.50	4.75	4.25	2.38	7.27	6.56	—	5.06	—	6.76	10.44	5.50	4.81

Size	O	P	Q	R-NEMA Mounting 42CZ	R-NEMA Mounting 56C 140TC	S	T Tap Size	T Depth	Low Speed Shaft Max U +.0015 -.0000	Low Speed Shaft V	Low Speed Shaft W-Key Sq.	Low Speed Shaft W-Key Length	Approx. Weight (LBS.) HFWA	Approx. Weight (LBS.) HQCWA
713	5.88	2.59	#10-32	2.16	3.31	.88	5/16-18	.50	.625	.68			17	19
718	7.19	2.94	#10-32	2.16	3.31	1.38	5/16-18	.50	1.000	.74			27	31
721	7.94	3.38	1/4-28	—	3.31	1.94	3/8-16	.56	1.4375	.87	See Page		37	39
726	9.35	3.78	5/16-24	—	3.31	2.50	3/8-16	.56	1.9375	.78	128 For		60	67
730	10.18	4.38	5/16-24	—	3.31	2.88	7/16-14	.88	2.1875	1.11	Key Information		82	95
732	11.00	4.38	5/16-24	—	3.31	2.88	7/16-14	.66	2.1875	.93			104	121
738	12.27	4.88	5/16-24	—	3.31	3.25	1/2-13	.75	2.4375	1.11			149	166

* See Assemblies and Mounting Positions, Page 72.
Input may be rotated clockwise or counterclockwise.
Note: For base dimensions see Single Reduction Flanged Reducer Dimension pages. See Page 128 for available bore sizes.

700 Series Double Reduction Flanged Reducer Dimensions

HFWA700/HQCWA700 Series Flanged Quill/Flanged Coupling Types

R Position Mounting Bracket; Parallel Shafts; Bored to Size Hollow Output

FOR ORDERING INFORMATION, see Page 56.

FOR RATING INFORMATION, See Pages 71, 77-81.

ASSEMBLY TYPES*

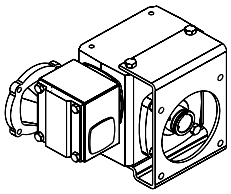

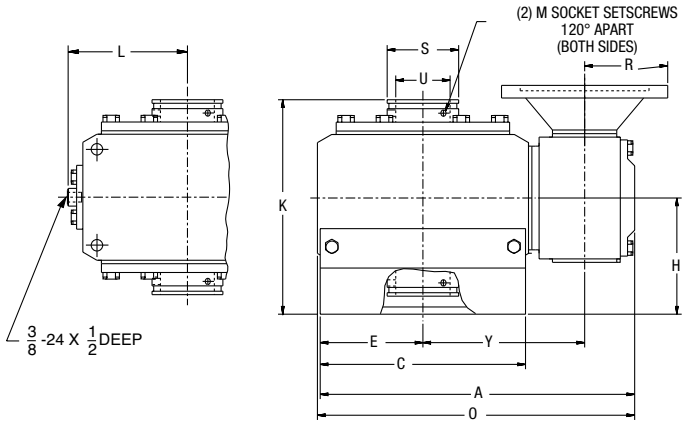

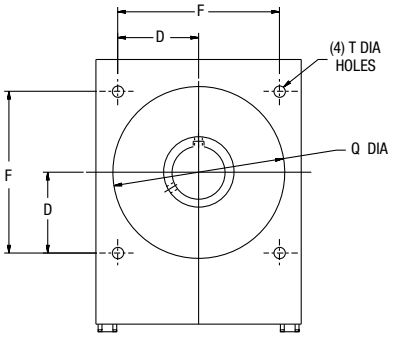

ALL DIMENSIONS IN INCHES

Size	A	B	C	D	E	F	G	H	J-NEMA Mounting HFWA700 42CZ	J-NEMA Mounting HFWA700 56C 140TC	J-NEMA Mounting HQCWA700 42CZ	J-NEMA Mounting HQCWA700 56C 140TC	K	L	M	N
713	7.40	5.55	4.25	1.77	2.12	3.54	.19	3.00	3.16	3.94	4.15	5.01	5.50	—	#10-32	2.50
718	8.38	6.66	4.81	2.08	2.41	4.16	.19	3.50	3.16	3.94	4.15	5.01	6.53	—	#10-32	3.03
721	9.57	7.47	5.75	2.30	2.88	4.60	.19	3.75	—	3.94	—	5.46	6.97	—	1/4-28	3.22
726	11.00	9.25	7.18	2.83	3.59	5.66	.25	4.06	—	3.94	—	5.46	7.50	—	5/16-24	3.44
730	12.39	10.38	8.00	3.18	4.00	6.36	.25	4.50	—	4.69	—	6.29	8.69	—	5/16-24	4.19
732	13.44	10.91	8.50	3.54	4.25	7.08	.25	5.25	—	4.69	—	6.29	9.56	4.94	5/16-24	4.31
738	14.91	11.84	9.50	4.06	4.75	8.12	.25	5.47	—	5.06	—	6.76	10.28	5.50	5/16-24	4.81

Size	O	P	Q	R-NEMA Mounting 42CZ	R-NEMA Mounting 56C 140TC	S	T Holes	Low Speed Shaft Max U +.0015 -.0000	Low Speed Shaft V	Low Speed Shaft W-Key Size	Low Speed Shaft W-Key Length	Y	Approx. Weight (LBS.) HFWA	Approx. Weight (LBS.) HQCWA
713	7.41	.50	3.62	2.16	3.31	.88	11/32	.625	.68			3.75	18	20
718	8.72	.47	4.06	2.16	3.31	1.38	11/32	1.000	.74			4.44	30	36
721	9.69	.53	4.50	—	3.31	1.94	13/32	1.4375	.87	See Page		4.94	42	47
726	11.09	.62	6.00	—	3.31	2.50	13/32	1.9375	.78	128 For		5.66	56	80
730	12.45	.31	7.00	—	3.31	2.88	13/32	2.1875	1.10	Key Information		6.12	95	116
732	13.69	.94	7.00	—	3.31	2.88	9/16	2.1875	.93			6.48	134	151
738	15.16	.66	8.00	—	3.31	3.25	9/16	2.4375	1.11			7.27	178	200

* See Assemblies and Mounting Positions, Page 72.
See Page 128 for available bore sizes.
Input may be rotated clockwise or counterclockwise.

700 Series Double Reduction Flanged Reducer Dimensions

SFWA700 Series Flanged Quill Type

Basic Models (No Base); Parallel Shafts; Hollow Output

FOR ORDERING INFORMATION, see Page 56.

FOR ADDITIONAL SIZES, See the H Series Pages 88-89.
FOR RATING INFORMATION, See Pages 71, 77-81.

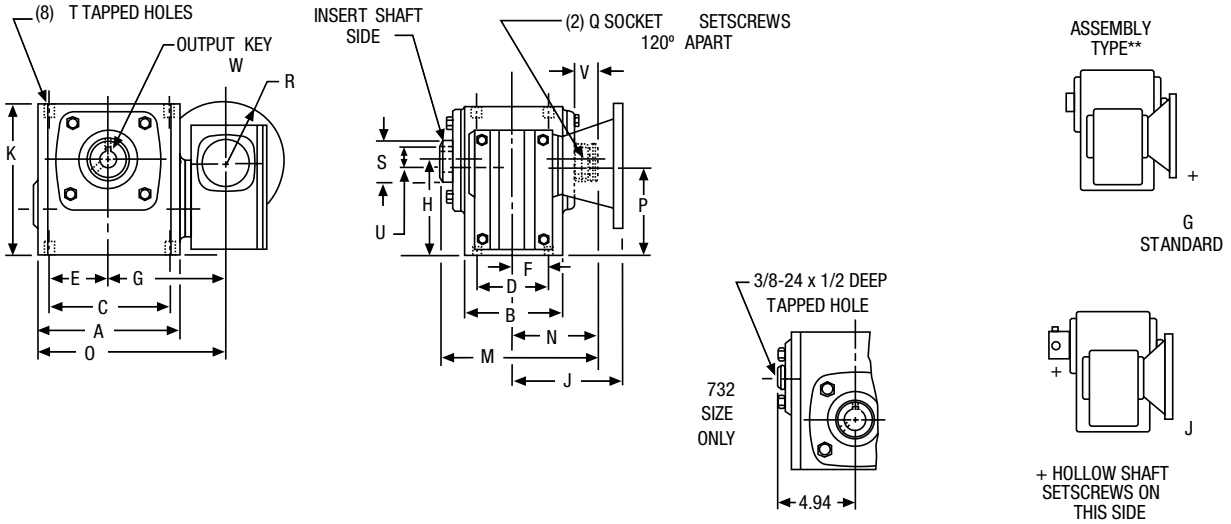

ALL DIMENSIONS IN INCHES

Size	A	B	C	D	E	F	G	H	J-NEMA Mounting SFWA 42CZ	J-NEMA Mounting SFWA 56C 140TC	K	M	N
718	5.50	3.69	4.19	2.75	2.09	1.38	4.44	3.69	3.16	3.94	5.75	5.47	3.09
721	6.00	3.81	5.00	2.88	2.50	1.44	4.94	4.09	—	3.94	6.38	5.69	3.22
726	7.38	4.44	6.38	3.38	3.19	1.69	5.66	5.06	—	3.94	8.00	6.28	3.50
732	9.00	5.88	7.50	4.00	3.75	2.00	6.48	5.88	—	4.69	9.38	7.88	4.38

Size	O	P	Q	R-NEMA Mounting 42CZ	R-NEMA Mounting 56C 140TC	S	T Tap Size	T Depth	Low Speed Shaft U +.0015 -.000	Low Speed Shaft V	Low Speed Shaft W-Key Sq.	Low Speed Shaft W-Key Length	Approx. Weight (LBS.) SFWA
718	7.19	2.94	#10-32	2.16	3.31	1.38	5/16-18	.50	1.000	.78	See Page		26
721	7.94	3.38	1/4-28	—	3.31	1.50	3/8-16	.56	1.125	.88	128 For		35
726	9.34	3.78	1/4-28	—	3.31	2.16	3/8-16	.56	1.4375	.84	Key Information		57
732	11.00	4.38	5/16-24	—	3.31	2.56	7/16-14	.66	1.9375	1.00			99

** Assemblies define output (slow speed) shaft projection with respect to input (high speed) shaft and mounted surfaces. Input may be rotated clockwise or counterclockwise.

Note: For base dimensions see Single Reduction Flanged Reducer Dimension pages.

See Assemblies and Mounting Positions, Page 72.

Reaction Rod Kits

ALL DIMENSIONS IN INCHES

Size	A	B	Catalog Number	Kit No.
718	1.09	.09	X718-76K	69692
721	1.25	.03	X721-76K	69693
726	1.25	.22	X726-76K	69694
732	1.50	.53	X732-76K	69695

All hardware shown is included in the kits.

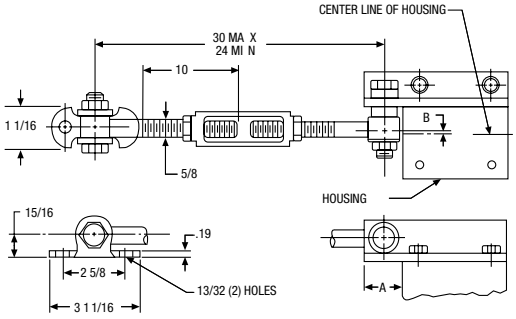

700 Series Double Reduction Flanged Reducer Dimensions

SFWA700 Series Flanged Quill Type

V Position Mounting Flange; Parallel Shafts; Hollow Output

FOR ORDERING INFORMATION, see Page 56.

FOR ADDITIONAL SIZES, See the H Series Pages 88-89.
FOR RATING INFORMATION, See Pages 71, 77-81.

B

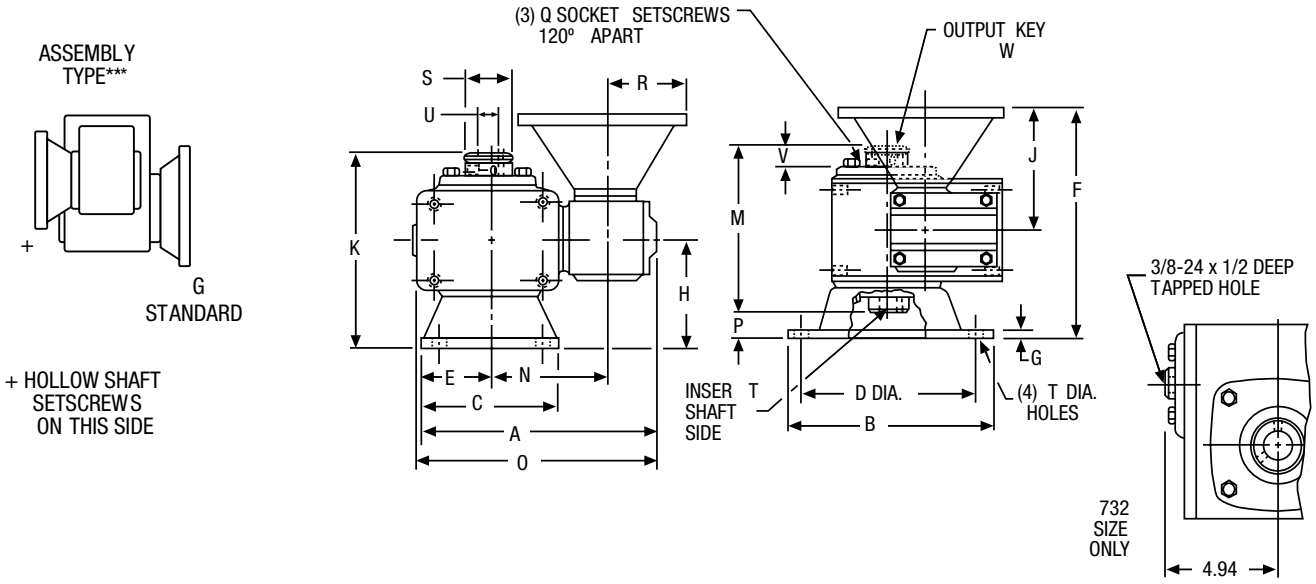

ALL DIMENSIONS IN INCHES

Size	A	B	C	D DIA.	E	G	H	J-NEMA Mounting SFWA 42CZ	J-NEMA Mounting SFWA 56C 140TC	K	M	N
718	8.41	6.75	4.88	5.88	2.44	.38	3.50	3.16	3.94	6.59	5.69	4.44
721	9.56	7.38	5.75	6.50	2.88	.38	3.75	—	3.94	6.97	5.88	4.94
726	11.28	8.88	7.75	8.00	3.88	.38	4.06	—	3.94	7.56	6.47	5.66
732	13.25	11.00	9.00	10.00	4.50	.50	5.25	—	4.69	9.63	8.06	6.48

Size	O	P	Q	R-NEMA Mounting 42CZ	R-NEMA Mounting 56C 140TC	S	T Holes	Low Speed Shaft U +.0015 -.000	Low Speed Shaft V	Low Speed Shaft W-Key Size	Low Speed Shaft W-Key Length	Approx. Weight (LBS.) SFWA
718	8.72	.91	#10-32	2.16	3.31	1.38	11/32	1.000	.78	See Page		29
721	9.69	1.09	1/4-28	—	3.31	1.50	13/32	1.125	.88	128 For		40
726	11.09	1.09	1/4-28	—	3.31	2.16	13/32	1.4375	.84	Key Information		53
732	13.25	1.56	5/16-24	—	3.31	2.56	9/16	1.9375	1.00			128

*Assemblies define output (slow speed) shaft projection with respect to input (high speed) shaft. See Assemblies and Mounting Positions, Page 72.

700 Series Double Reduction Flanged Reducer Dimensions

FWC700/QCWC700 Series Flanged Quill/Flanged Coupling Types

Basic Models (No Base); Right Angle Shafts

FOR ORDERING INFORMATION, see Page 56.

FOR RATING INFORMATION, See Pages 71, 77-81.

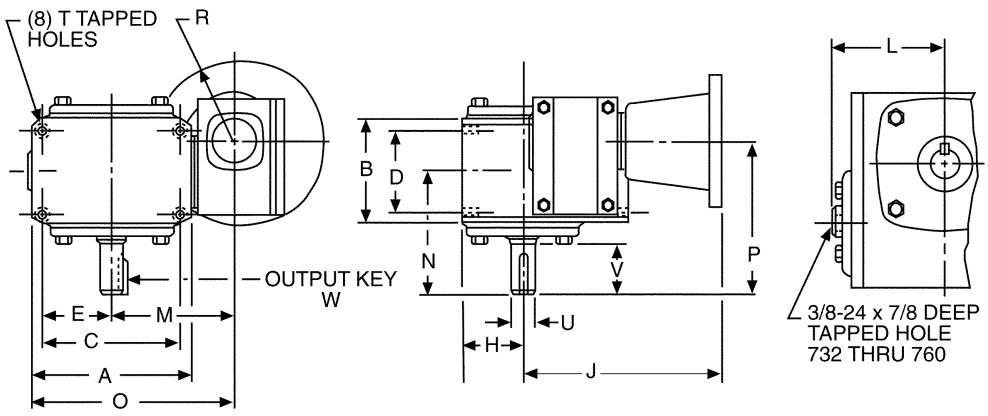

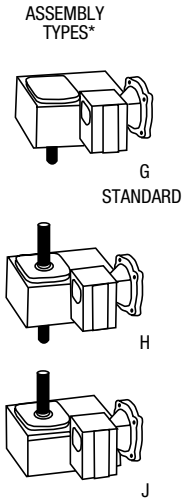

B

ALL DIMENSIONS IN INCHES

Size	A	B	C	D	E	H	J-NEMA Mounting						L	M	N	O
							FWC700			QCWC700						
							42CZ	56C 140TC	180TC 210C	42CZ	56C 140TC	180TC 210C				
713	4.25	2.88	3.25	2.00	1.63	1.72	4.49	5.30	—	5.48	6.35	—	—	3.75	4.00	5.88
718	5.50	3.69	4.19	2.75	2.09	2.06	4.91	5.72	—	5.90	6.76	—	—	4.44	4.31	7.19
721	6.00	3.81	5.00	2.88	2.50	2.28	—	6.00	—	—	7.52	—	—	4.94	4.69	7.94
726	7.38	4.44	6.38	3.38	3.19	2.94	—	6.56	—	—	9.22	—	—	5.66	5.63	9.35
730	8.12	5.25	7.00	4.00	3.50	3.25	—	7.69	—	—	9.29	—	—	6.12	6.75	10.18
732	9.00	5.88	7.50	4.00	3.75	3.50	—	7.94	—	—	9.54	—	4.94	6.48	7.06	10.98
738	10.00	6.38	8.50	4.75	4.25	3.88	—	8.81	—	—	10.51	—	5.50	7.27	7.75	12.27
752	13.13	7.38	11.00	5.81	5.50	5.31	—	11.00	11.34	—	12.64	13.55	7.19	9.28	9.06	15.84
760	14.50	8.12	12.75	6.38	6.38	6.50	—	—	—	—	14.70	15.12	7.94	9.56	10.00	16.81

Size	P	R-NEMA Mounting			T		Low Speed Shaft				Approx. Weight (LBS.)		Vertical Base Kit No. †	
							U +.000 -.001	V	W-Key					
		42CZ	56C 140TC	180TC 210C	Tap Size	Depth			Sq.	Length	FWA	QCWC	High	Low
713	5.00	2.16	3.31	—	5/16-18	.50	.625	2.00	3/16	1	16	18	56578	56579
718	5.31	2.16	3.31	—	5-16-18	.50	.875	1.78	3/16	1	27	30	56582	56583
721	6.03	—	3.31	—	3/8-16	.56	1.000	2.09	1/4	1-1/4	37	39	56588	56589
726	6.97	—	3.31	—	3/8-16	.56	1.125	2.62	1/4	1-15/16	62	62	56596	56597
730	8.50	—	3.31	—	7/16-14	.88	1.250	3.25	1/4	2-1/4	83	91	65545	65546
732	8.81	—	3.31	—	7/16-14	.66	1.375	3.25	5/16	2-7/16	103	119	56600	56601
738	9.81	—	3.31	—	1/2-13	.75	1.625	3.50	3/8	2-1/4	142	158	56604	56605
752	11.69	—	3.31	4.63	5/8-11	1.00	2.000	4.16	1/2	2-15/16	247	267	56608	56609
760	13.25	—	3.31	4.63	5/8-11	1.00	2.250	4.56	1/2	3-3/8	—	340	56611	56612

* See Assemblies and Mounting Positions, Page 73.

† For Base Kits, see Page 129 .

700 Series Double Reduction Flanged Reducer Dimensions

HFWC700/HQCWC700 Series Flanged Quill/Flanged Coupling Types

Basic Models (No Base); Right Angle Shafts; Bored to Size Hollow Output

FOR ORDERING INFORMATION, see Page 56.

FOR RATING INFORMATION, See Pages 71, 77-81.

B

ASSEMBLY TYPES*

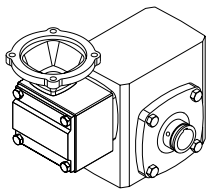

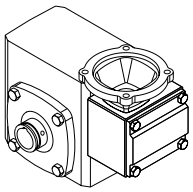

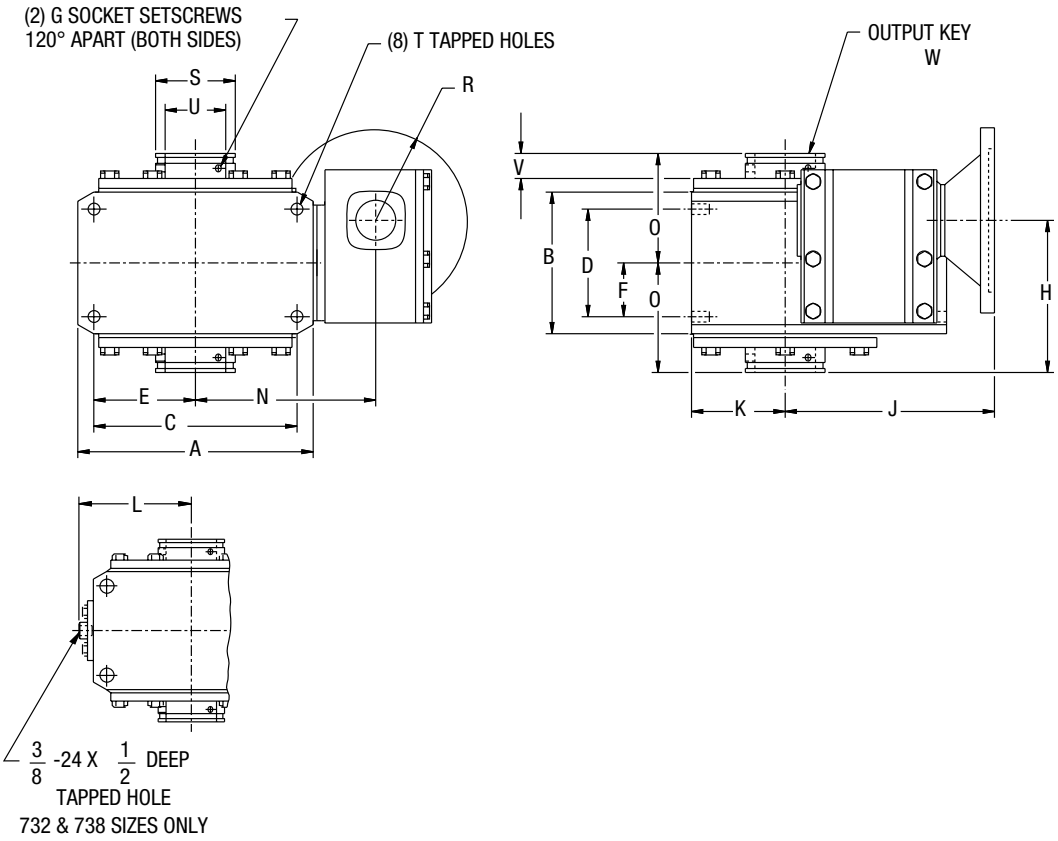

ALL DIMENSIONS IN INCHES

Size	A	B	C	D	E	F	G	H	J-NEMA Mounting HFWC 42CZ	J-NEMA Mounting HFWC 56C 140TC	J-NEMA Mounting HQCWC 42CZ	J-NEMA Mounting HQCWC 56C 140TC	K	L
713	4.25	2.88	3.25	2.00	1.63	1.00	#10-32	3.50	4.49	5.30	5.48	6.35	1.72	—
718	5.50	3.69	4.19	2.75	2.09	1.38	#10-32	4.03	4.91	5.72	5.90	6.76	2.06	—
721	6.00	3.81	5.00	2.88	2.50	1.44	1/4-28	4.55	—	6.00	—	7.52	2.28	—
726	7.38	4.44	6.38	3.38	3.19	1.69	5/16-24	4.77	—	6.56	—	9.22	2.94	—
730	8.12	5.25	7.00	4.00	3.50	2.00	5/16-24	5.94	—	7.69	—	9.29	3.25	—
732	9.00	5.88	7.50	4.00	3.75	2.00	5/16-24	6.06	—	7.94	—	9.54	3.50	4.94
738	10.00	6.38	8.50	4.75	4.25	2.38	5/16-24	6.87	—	8.81	—	10.51	3.88	5.50

Size	N	O	R-NEMA Mounting 42CZ	R-NEMA Mounting 56C 140TC	S	T Tap Size	T Depth	Low Speed Shaft Max U +.0015 -.0000	Low Speed Shaft V	Low Speed Shaft W-Key Size	Low Speed Shaft W-Key Length	Approx. Weight (LBS.) HFWC	Approx. Weight (LBS.) HQCWC
713	3.75	2.50	2.16	3.31	.88	5/16-18	.50	.625	.68			17	19
718	4.44	3.03	2.16	3.31	1.38	5/16-18	.50	1.000	.74			27	31
721	4.94	3.22	—	3.31	1.94	3/8-16	.56	1.4375	.87	See Page		37	39
726	5.66	3.44	—	3.31	2.50	3/8-16	.56	1.9375	.78	128 For		60	67
730	6.12	4.19	—	3.31	2.88	7/16-14	.88	2.1875	1.10	Key Information		82	95
732	6.48	4.31	—	3.31	2.88	7/16-14	.66	2.1875	.93			104	121
738	7.27	4.81	—	3.31	3.25	1/2-13	.75	2.4375	1.11			149	166

* See Assemblies and Mounting Positions, Page 73.

Note: For base dimensions see Single Reduction Flanged Reducer Dimension pages. See Page 128 for available bore sizes.

HFWC700/HQCWC700 Series **Flanged Quill/Flanged Coupling Types**

R/L Position Mounting Bracket; Right Angle Shafts; Bored to Size Hollow Output

FOR ORDERING INFORMATION, see Page 56.

FOR RATING INFORMATION, See Pages 71, 77-81.

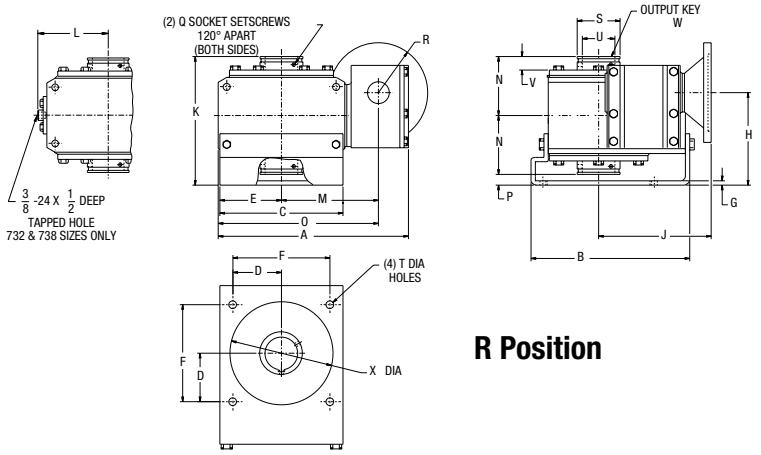

R Position

ASSEMBLY TYPES*

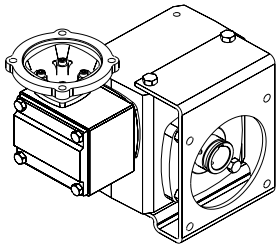

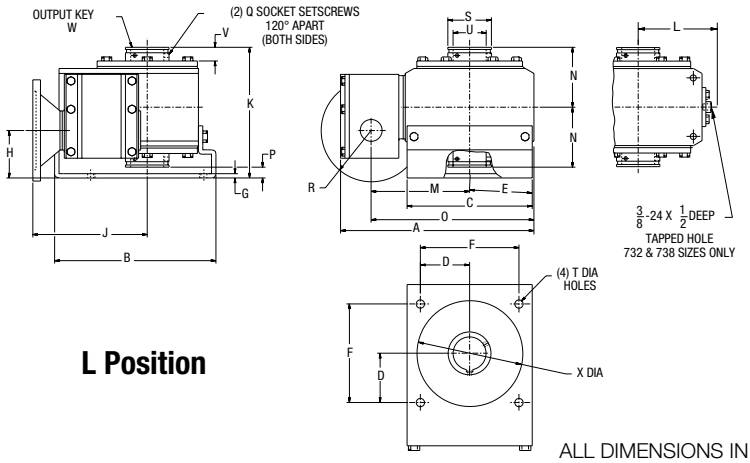

L Position

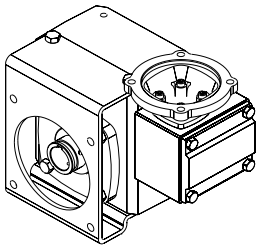

ALL DIMENSIONS IN INCHES

Size	A	B	C	D	E	F	G	H R Model	H L Model	J-NEMA Mounting HFWC 42CZ	J-NEMA Mounting HFWC 56C 140TC	J-NEMA Mounting HQCWC 42CZ	J-NEMA Mounting HQCWC 56C 140TC	K	L	M
713	7.41	5.55	4.24	1.77	2.12	3.54	.19	4.00	2.00	4.49	5.30	5.48	6.35	5.50	—	3.75
718	8.72	6.66	5.00	2.08	2.41	4.16	.19	4.50	2.50	4.91	5.72	5.90	6.76	6.53	—	4.44
721	9.69	7.47	5.76	2.30	2.88	4.60	.19	5.08	2.42	—	6.00	—	7.52	6.97	—	4.94
726	11.09	9.25	7.18	2.83	3.59	5.66	.25	5.39	2.73	—	6.56	—	9.22	7.50	—	5.66
730	12.45	10.38	8.00	3.18	4.00	6.36	.25	6.25	2.75	—	7.69	—	9.29	8.69	—	6.12
732	13.69	10.91	8.50	3.54	4.25	7.08	.25	7.00	3.50	—	7.94	—	9.54	9.56	4.94	6.48
738	15.16	11.84	9.50	4.06	4.75	8.12	.25	7.53	3.41	—	8.81	—	10.51	10.28	5.50	7.27

Size	N	O	P	Q	R-NEMA Mounting 42CZ	R-NEMA Mounting 56C 140TC	S	T Holes	Low Speed Shaft Max U +.0015 -.0000	Low Speed Shaft V	Low Speed Shaft W-Key Size	Low Speed Shaft W-Key Length	X	Approx. Weight (LBS.) HFWC	Approx. Weight (LBS.) HQCWC
713	2.50	5.87	.50	#10-32	2.16	3.31	.88	11/32	.625	.68			3.62	18	20
718	3.03	7.19	.47	#10-32	2.16	3.31	1.38	11/32	1.000	.74			4.06	30	36
721	3.22	7.94	.53	1/4-28	—	3.31	1.94	13/32	1.4375	.87	See Page		4.50	42	47
726	3.44	9.35	.62	5/16-24	—	3.31	2.50	13/32	1.9375	.78	128 For		6.00	56	80
730	4.19	10.18	.31	5/16-24	—	3.31	2.88	13/32	2.1875	1.10	Key Information		7.00	95	116
732	4.31	10.98	.94	5/16-24	—	3.31	2.88	9/16	2.1875	.93			7.00	134	151
738	4.81	12.27	.66	5/16-24	—	3.31	3.25	9/16	2.4375	1.11			8.00	178	200

* See Assemblies and Mounting Positions, Page 73.

See Page 128 for available bore sizes.

700 Series Double Reduction Flanged Reducer Dimensions

SFWC700 Series Flanged Quill Type

Basic Models (No Base); Right Angle Shafts; Hollow Output

FOR ORDERING INFORMATION, see Page 56.

FOR ADDITIONAL SIZES, See the H Series Pages 88-89.
FOR RATING INFORMATION, See Pages 71, 77-81.

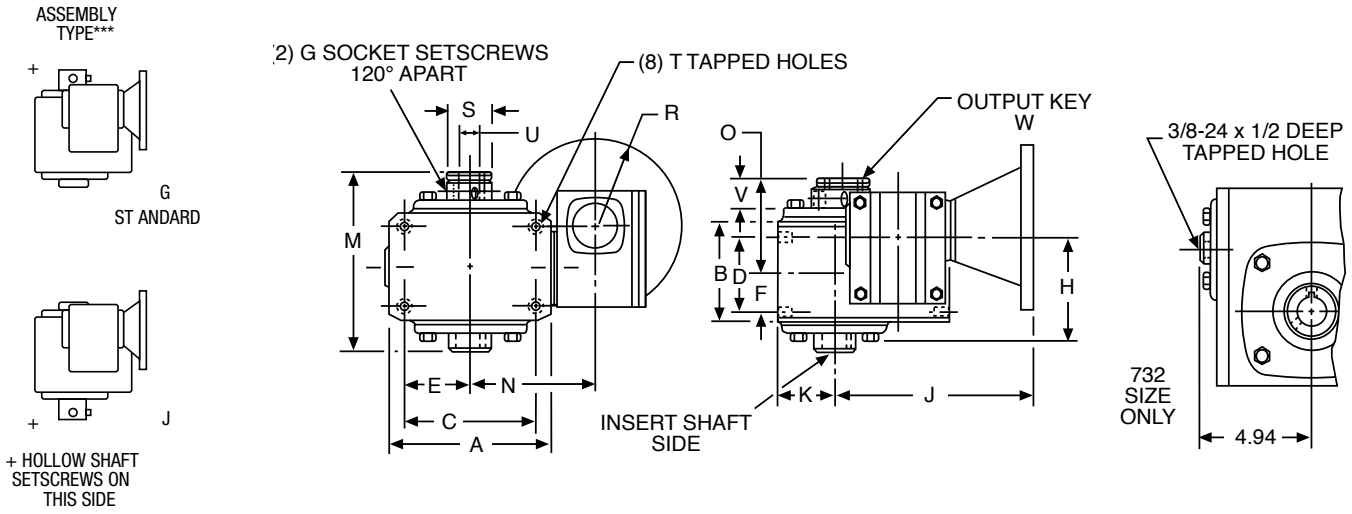

ALL DIMENSIONS IN INCHES

Size	A	B	C	D	E	F	G	H	J-NEMA Mounting SFWC 42CZ	J-NEMA Mounting SFWC 56C 140TC	K	M
718	5.50	3.69	4.19	2.75	2.09	1.38	#10-32	3.50	4.91	5.69	2.06	5.69
721	6.00	3.81	5.00	2.88	2.50	1.44	1/4-28	3.94	—	6.00	2.28	5.88
726	7.38	4.44	6.38	3.38	3.19	1.69	1/4-28	4.25	—	6.56	2.94	6.47
732	9.00	5.88	7.50	4.00	3.75	2.00	5/16-24	5.34	—	7.94	3.50	8.06

Size	N	O	R-NEMA Mounting 42CZ	R-NEMA Mounting 56C 140TC	S	T Tap Size	T Depth	Low Speed Shaft U +.0015 -.000	Low Speed Shaft V	Low Speed Shaft W-Key Size	Low Speed Shaft W-Key Length	Approx. Weight (LBS.) SFWC
718	4.44	3.09	2.16	3.31	1.38	5/16-18	.50	1.000	.78	See Page		24
721	4.94	3.22	—	3.31	1.50	3/8-16	.56	1.125	.88	128 For		32
726	5.66	3.50	—	3.31	2.16	3/8-16	.56	1.4375	.84	Key Information		51
732	6.48	4.38	—	3.31	2.56	7/16-14	.66	1.9375	1.00			99

*See Assemblies and Mounting Positions, Page 73. Assemblies define output (slow speed) shaft projection with respect to input (high speed) shaft.

Reaction Rod Kits

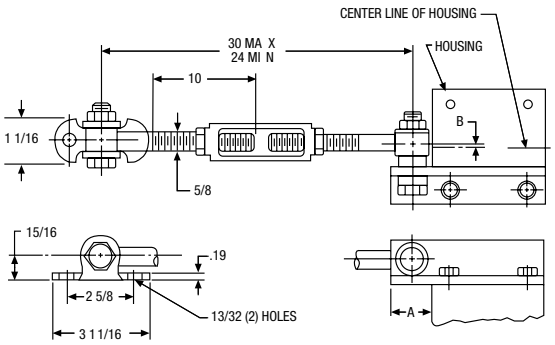

ALL DIMENSIONS IN INCHES

Size	A	B	Catalog Number	Kit No.
718	1.09	.09	X718-76K	69692
721	1.25	.03	X721-76K	69693
726	1.25	.22	X726-76K	69694
732	1.50	.53	X732-76K	69695

All hardware shown is included in the kits.

SFWC700 Series Flanged Quill Type

V/W Position Mounting Flange; Right Angle Shafts; Hollow Output

FOR ORDERING INFORMATION, see Page 56.
FOR ADDITIONAL SIZES, See the H Series Page 88-89.
FOR RATING INFORMATION, See Pages 71, 77-81.

V Position

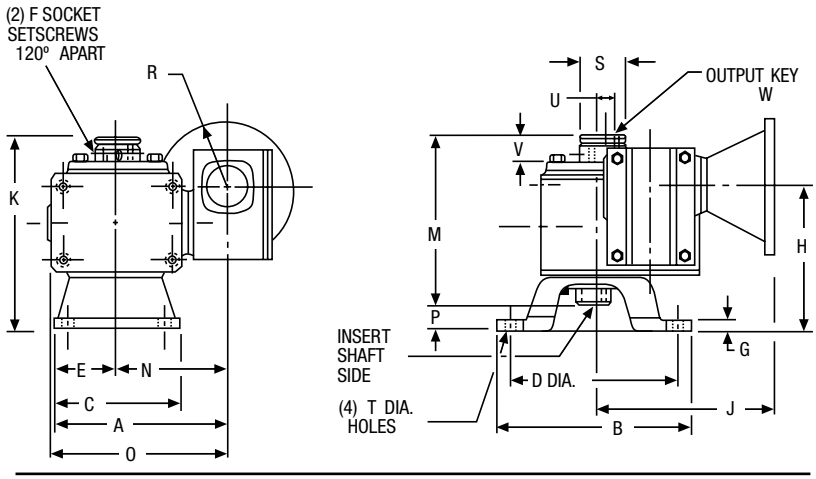

W Position

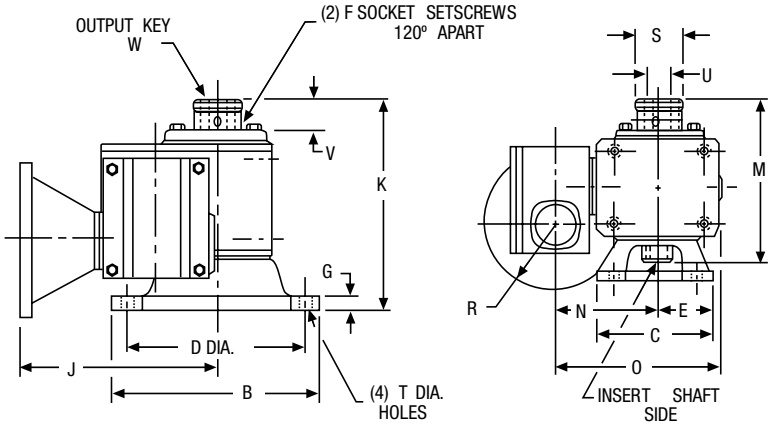

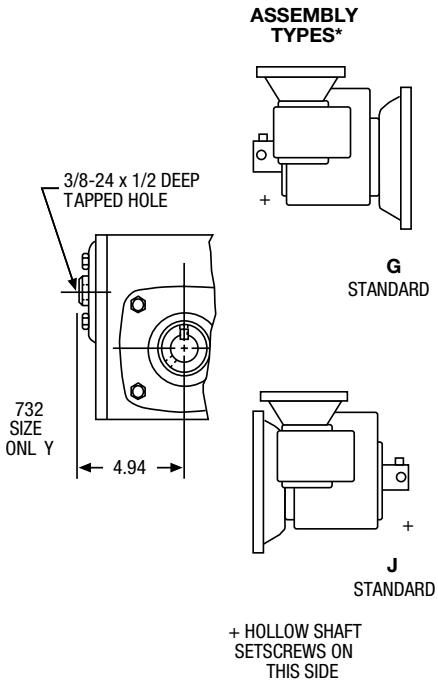

ALL DIMENSIONS IN INCHES

SIZE	A	B	C	D DIA	E	F	G	H	J-NEMA Mounting SFWC 42CZ	J-NEMA Mounting SFWC 56C 140TC	K	M
718	6.88	6.75	4.88	5.88	2.44	#10-32	.38	4.50	4.91	5.69	6.59	5.69
721	7.81	7.38	5.75	6.50	2.88	1/4-28	.38	5.09	—	6.00	6.97	5.88
726	9.54	8.88	7.75	8.00	3.88	5/16-24	.38	5.41	—	6.56	7.56	6.47
732	11.00	11.00	9.00	10.00	4.50	5/16-24	.50	7.00	—	7.94	9.63	8.06

SIZE	N	O	P	R-NEMA Mounting 42CZ	R-NEMA Mounting 56C 140TC	S	T Hole	Low Speed Shaft U +.0015 -.000	Low Speed Shaft V	Low Speed Shaft W-KEY Size	Low Speed Shaft W-KEY Length	Approx. Weight (LBS.) SFWC
718	4.44	7.19	0.91	2.16	3.31	1.38	11/32	1.000	0.78			29
721	4.94	7.94	1.09	—	3.31	1.50	13/32	1.125	0.88	See Page		40
726	5.66	9.34	1.09	—	3.31	2.16	13/32	1.4375	0.84	128 For		53
732	6.48	11.00	1.56	—	3.31	2.56	9/16	1.9375	1.00	Key Information		128

* See Assemblies and Mounting Positions, Page 73. Assemblies define output (slow speed) shaft projection with respect to input (high speed) shaft.

700 Series Double Reduction Non-Flanged Reducer Dimensions

WA700 Series

Basic Models (No Base); Parallel Shafts

FOR ORDERING INFORMATION, see Page 56.
FOR RATING INFORMATION, See Pages 71, 77-81.

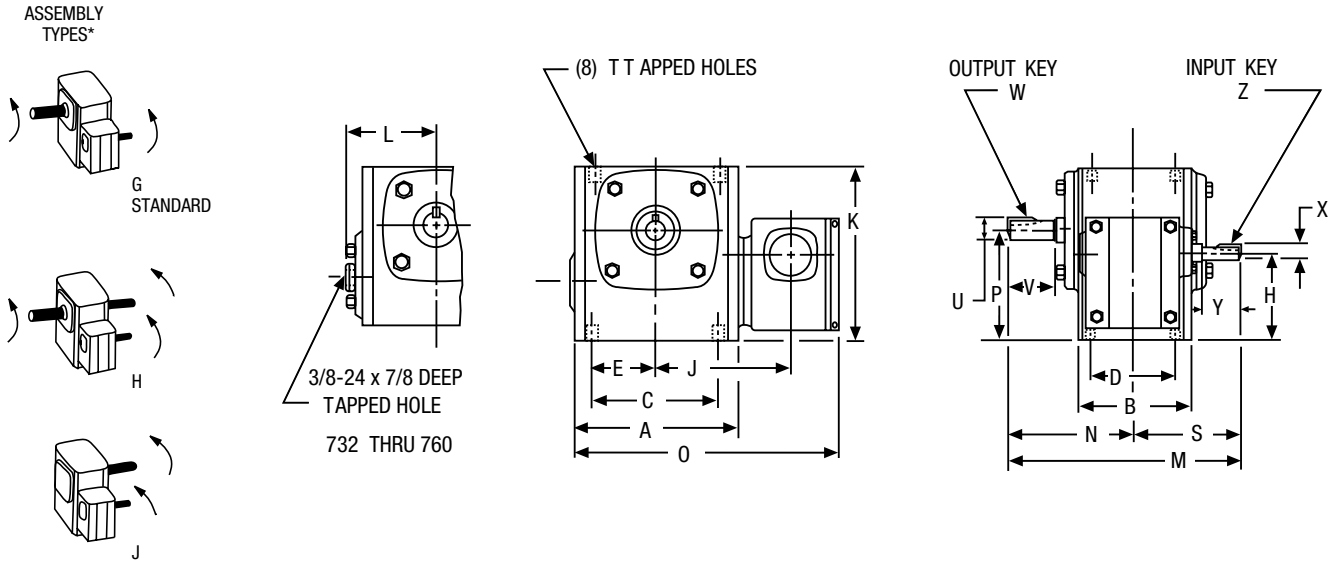

ALL DIMENSIONS IN INCHES

SIZE	A	B	C	D	E	H	J	K	L	M	N	O	P
713	4.25	2.88	3.25	2.00	1.63	2.63	3.75	4.66	—	6.88	4.00	7.41	2.94
718	5.50	3.69	4.19	2.75	2.09	2.94	4.44	5.75	—	7.19	4.31	8.72	3.69
721	6.00	3.81	5.00	2.88	2.50	3.38	4.94	6.38	—	8.59	4.69	9.69	4.09
726	7.38	4.44	6.38	3.38	3.19	3.78	5.66	8.00	—	9.53	5.63	11.09	5.06
730	8.12	5.25	7.00	4.00	3.50	4.38	6.12	8.88	—	11.59	6.75	12.45	5.63
732	9.00	5.88	7.50	4.00	3.75	4.38	6.48	9.38	4.94	11.90	7.06	13.69	5.88
738	10.00	6.38	8.50	4.75	4.25	4.88	7.27	10.44	5.50	12.88	7.75	15.16	6.56
752	13.13	7.38	11.00	5.81	5.50	5.88	9.28	13.75	7.19	15.38	9.06	19.34	8.41
760	14.50	8.13	12.75	6.38	6.38	7.25	9.56	16.50	7.94	17.44	10.00	21.13	10.00

Size	S	T		Low Speed Shaft				High Speed Shaft				Approx. Weight (Lbs.)	Horizontal Base Kit No.
				U		W-KEY		X		Z-KEY			
		Tap Size	Depth	+.000 -.001	V	Sq	Length	+.000 -.001	Y	Sq	Length		
713	2.88	5/16-18	.50	.625	2.00	3/16	1	.3745	.81	3/32	3/8	15	56577
718	2.88	5/16-18	.50	.875	1.78	3/16	1	.3745	.81	3/32	3/8	28	56585
721	3.91	3/8-16	.56	1.000	2.09	1/4	1-1/4	.4995	1.31	1/8	5/8	37	56587
726	3.91	3/8-16	.56	1.125	2.63	1/4	1-5/16	.4995	1.31	1/8	5/8	55	56595
730	4.84	7/16-14	.88	1.250	3.25	1/4	2-1/4	.6245	1.56	3/16	13/16	73	65544
732	4.84	7/16-14	.66	1.375	3.25	5/16	2-7/16	.6245	1.56	3/16	13/16	93	56599
738	5.13	1/2-13	.75	1.625	3.50	3/8	2-1/4	.6245	1.56	3/16	13/16	132	56603
752	6.31	5/8-11	1.00	2.000	4.16	1/2	2-15/16	.7495	2.38	3/16	1	235	56607
760	7.44	5/8-11	1.00	2.250	4.56	1/2	3-3/8	.8745	2.31	3/16	1	298	56610

* See Assemblies and Mounting Positions, Page 74.
† For Base Kits, see Page 129.
Note: For base dimensions see Single Reduction Flanged Reducer Dimension pages.

700 Series Double Reduction Non-Flanged Reducer Dimensions

HWA700 Series

Basic Models (No Base); Parallel Shafts; Bored to Size Hollow Output

FOR ORDERING INFORMATION, see Page 56.
FOR RATING INFORMATION, See Pages 71, 77-81.

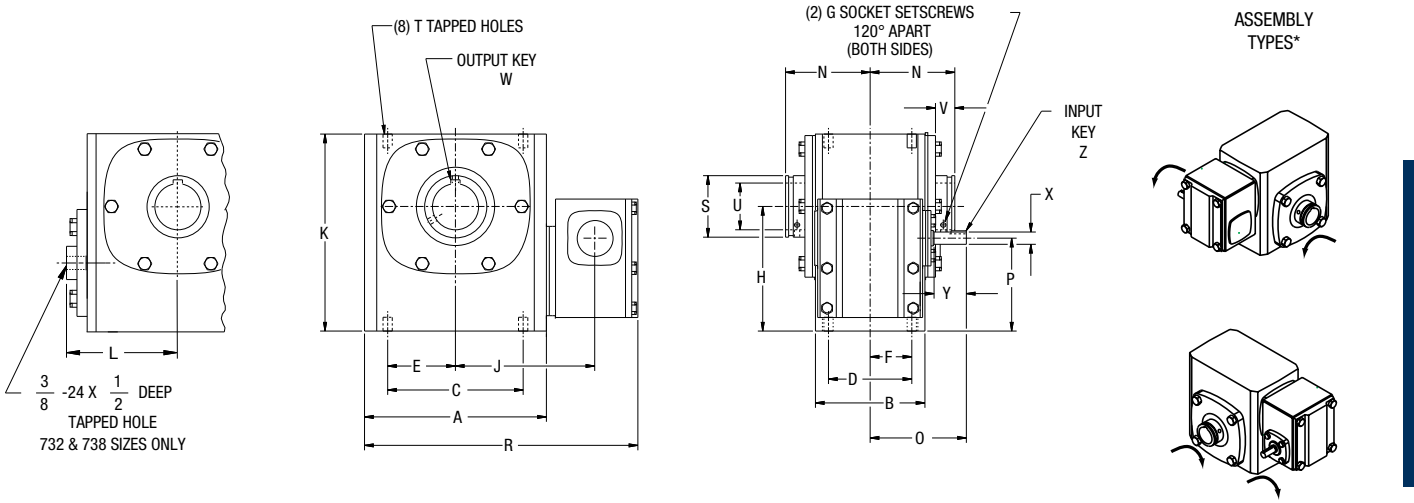

ALL DIMENSIONS IN INCHES

SIZE	A	B	C	D	E	F	G	H	J	K	L	N	O	P
713	4.25	2.88	3.25	2.00	1.63	1.00	#10-32	2.94	3.75	4.66	—	2.50	2.88	2.63
718	5.50	3.69	4.19	2.75	2.09	1.38	#10-32	3.69	4.44	5.75	—	3.03	2.88	2.94
721	6.00	3.81	5.00	2.88	2.50	1.44	1/4-28	4.09	4.94	6.38	—	3.22	3.91	3.38
726	7.38	4.44	6.38	3.38	3.19	1.69	5/16-24	5.06	5.66	8.00	—	3.44	3.91	3.78
730	8.12	5.25	7.00	4.00	3.50	2.00	5/16-24	5.63	6.12	8.88	—	4.19	4.84	4.38
732	9.00	5.88	7.50	4.00	3.75	2.00	5/16-24	5.88	6.48	9.38	4.94	4.31	4.88	4.38
738	10.00	6.38	8.50	4.75	4.25	2.38	5/16-24	6.56	7.27	10.44	5.50	4.81	5.13	4.88

Size	R	S	T		Low Speed Shaft				High Speed Shaft				Approx. Weight (Lbs.)
					Max U +.0015 -.0000	V	W-KEY		X +.000 -.001	Y	Z-KEY		
			Tap Size	Depth			Sq	Length			Sq	Length	
713	7.41	.88	5/16-18	.50	.625	.68			.3745	.81	3/32	3/8	17
718	8.72	1.38	5/16-18	.50	1.000	.84			.3745	.81	3/32	3/8	28
721	9.69	1.94	3/8-16	.56	1.4375	.87	See Page		.4995	1.31	1/8	5/8	37
726	11.09	2.50	3/8-16	.56	1.9375	.78	128 For		.4995	1.31	1/8	5/8	55
730	12.45	2.88	7/16-14	.88	2.1875	1.10	Key Information		.6245	1.56	3/16	13/16	76
732	13.69	2.88	7/16-14	.66	2.1875	.93			.6245	1.56	3/16	13/16	96
738	15.16	3.25	1/2-13	.75	2.4375	1.11			.6245	1.56	3/16	13/16	166

* See Assemblies and Mounting Positions, Page 74.
Input may be rotated clockwise or counterclockwise. Arrows indicate relative rotation.
See Page 128 for available bore sizes.

700 Series Double Reduction Non-Flanged Reducer Dimensions

HWA700 Series

R Position Mounting Bracket; Parallel Shafts; Bored to Size Hollow Output

FOR ORDERING INFORMATION, see Page 56.
FOR RATING INFORMATION, See Pages 71, 77-81.

B

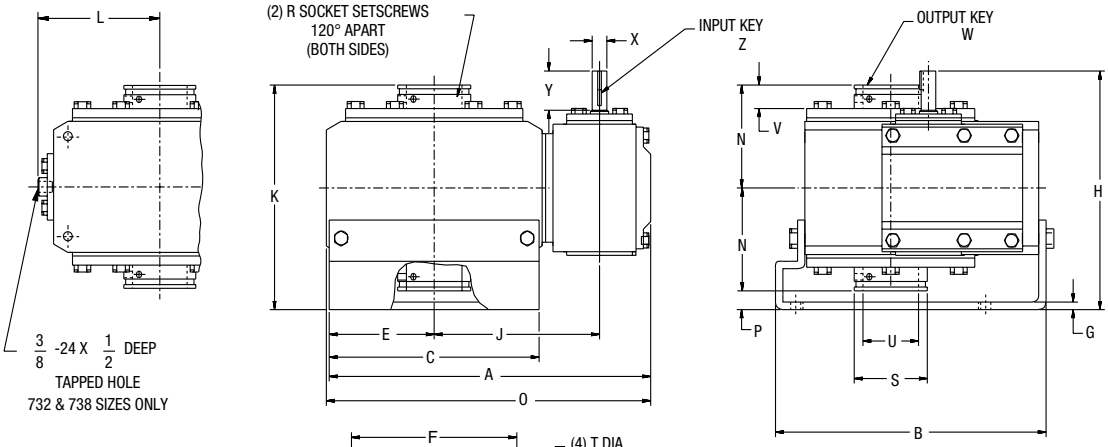

ASSEMBLY TYPES*

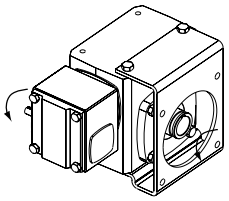

ALL DIMENSIONS IN INCHES

Size	A	B	C	D	E	F	G	H	J	K	L	M	N	O	P
713	7.40	5.55	4.25	1.77	2.12	3.54	.19	5.88	3.75	5.50	—	3.62	2.50	7.41	.50
718	8.38	6.66	4.81	2.08	2.41	4.16	.19	6.38	4.44	6.53	—	4.06	3.03	8.72	.47
721	9.57	7.47	5.75	2.30	2.88	4.60	.19	7.66	4.94	6.97	—	4.50	3.22	9.69	.53
726	11.00	9.25	7.18	2.83	3.59	5.66	.25	7.97	5.66	7.50	—	6.00	3.44	11.09	.62
730	12.39	10.38	8.00	3.18	4.00	6.36	.25	4.46	6.12	8.69	—	7.00	4.19	12.45	.31
732	13.44	10.91	8.50	3.54	4.25	7.08	.25	10.13	6.48	9.56	4.94	7.00	4.31	13.69	.94
738	14.91	11.84	9.50	4.06	4.75	8.12	.25	10.60	7.27	10.28	5.50	8.00	4.81	15.16	.66

				Low Speed Shaft				High Speed Shaft				
						W-KEY				Z-KEY		
Size	R	S	T DIA	Max U +.0015 -.0000	V	Sq	Length	X +.000 -.001	Y	Sq	Length	Approx. Weight (Lbs.)
713	#10-32	.88	11/32	.625	.68			.3745	.81	3/32	3/8	17
718	#10-32	1.38	11/32	1.000	.74			.3745	.81	3/32	3/8	34
721	1/4-28	1.94	13/32	1.4375	.87	See Page		.4995	1.31	1/8	5/8	42
726	5/16-24	2.50	13/32	1.9375	.78	128 For		.4995	1.31	1/8	5/8	66
730	5/16-24	2.88	13/33	2.1875	1.10	Key Information		.6245	1.56	3/16	13/16	86
732	5/16-24	2.88	9/16	2.1875	.93			.6245	1.56	3/16	13/16	126
738	5/16-24	3.25	9/16	2.4375	1.11			.6245	1.56	3/16	13/16	148

* See Assemblies and Mounting Position, Page 74
Input may be rotated clockwise or counterclockwise. Arrows indicate relative rotation.
See Page 128 for available bore sizes.

700 Series Double Reduction Non-Flanged Reducer Dimensions

SWA700 Series

Basic Models (No Base); Parallel Shafts; Hollow Output

FOR ORDERING INFORMATION, see Page 56.
FOR ADDITIONAL SIZES, See the H Series Page 88-89.
FOR RATING INFORMATION, See Pages 71, 77-81.

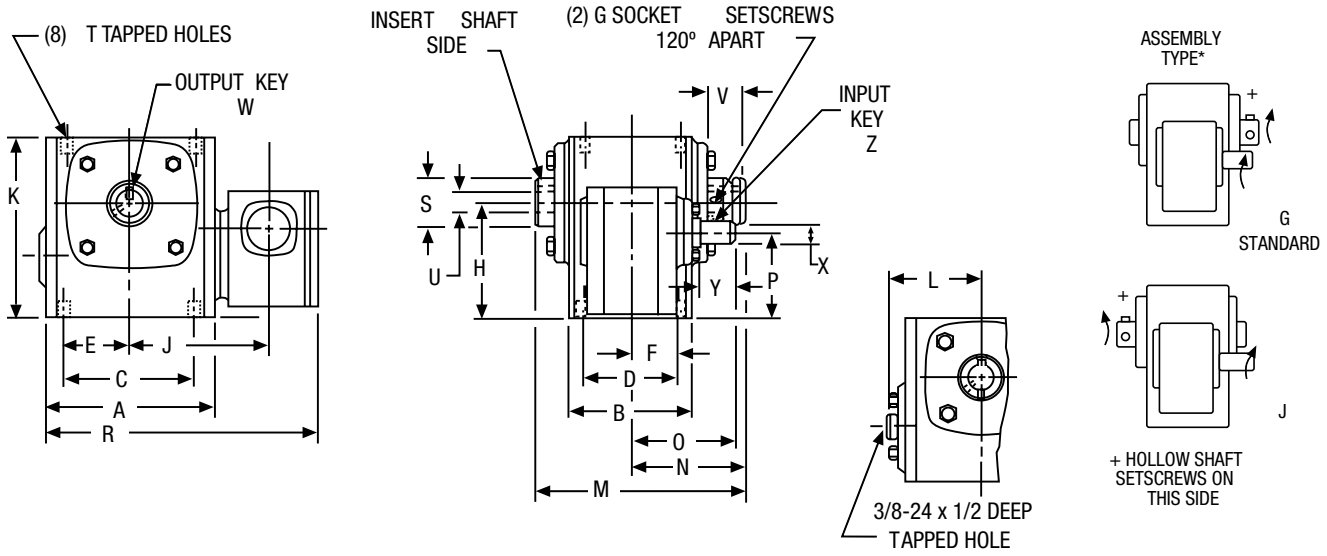

ALL DIMENSIONS IN INCHES

Size	A	B	C	D	E	F	G	H	J	K	M	N	O	P
718	5.50	3.69	4.19	2.75	2.09	1.38	#10-32	3.69	4.44	5.75	5.69	3.09	2.88	2.94
721	6.00	3.81	5.00	2.88	2.50	1.44	1/4-28	4.09	4.94	6.38	5.88	3.22	3.91	3.38
726	7.38	4.44	6.38	3.38	3.19	1.69	1/4-28	5.06	5.66	8.00	6.47	3.50	3.91	3.78
732	9.00	5.88	7.50	4.00	3.75	2.00	5/16-24	5.88	6.48	9.38	8.06	4.38	4.88	4.38

Size	R	S	T		Low Speed Shaft				High Speed Shaft				Approx. Weight (Lbs.)
					U		W-KEY		X		Z-KEY		
			Tap Size	Depth	+.0015 -.000	V	Sq	Length	+.000 -.001	Y	Sq	Length	
718	8.72	1.38	5/16-18	.50	1.000	.78	See Page		.3745	.81	3/32	3/8	27
721	9.69	1.50	3/8-16	.56	1.125	.88	128 For		.4995	1.31	1/8	5/8	35
726	11.09	2.16	3/8-16	.56	1.4375	.84	Key Information		.4995	1.31	1/8	5/8	52
732	13.69	2.56	7/16-14	.66	1.9375	1.00			.6245	1.56	3/16	13/16	91

* See Assemblies and Mounting Positions, Page 74. Assemblies define output (slow speed) shaft projection with respect to input (high speed) shaft and mounted surfaces, viewed from end of input shaft.
Input may be rotated clockwise or counterclockwise. Arrows indicate relative rotation.

Note: For base dimensions see Single Reduction Flanged Reducer Dimension pages.

Reaction Rod Kits

ALL DIMENSIONS IN INCHES

SIZE	A	B	Catalog Number	Kit No.
718	1.09	.09	X718-76K	69692
721	1.25	.03	X721-76K	69693
726	1.25	.22	X726-76K	69694
732	1.50	.53	X732-76K	69695

All hardware shown is included in the kits.

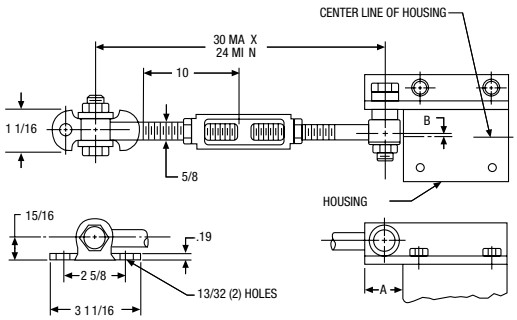

700 Series Double Reduction Non-Flanged Reducer Dimensions

SWA700 Series

V Position Mounting Flange; Parallel Shafts; Hollow Output

FOR ORDERING INFORMATION, see Page 56.
FOR ADDITIONAL SIZES, See the H Series Page 88-89.
FOR RATING INFORMATION, See Pages 71, 77-81.

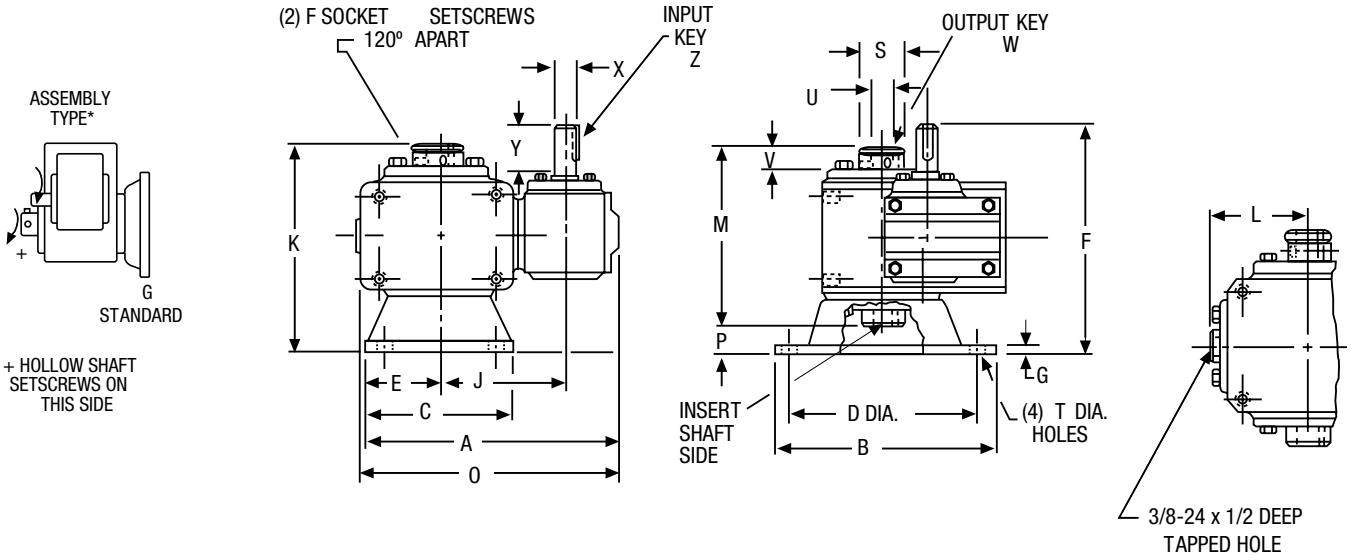

ALL DIMENSIONS IN INCHES

Size	A	B	C	D	E	F	G	J	K	M	O	P
718	8.41	6.75	4.88	5.88	2.44	#10-32	.38	4.44	6.59	5.69	8.72	.91
721	9.56	7.38	5.75	6.50	2.88	1/4-28	.38	4.94	6.97	5.88	9.69	1.09
726	11.28	8.88	7.75	8.00	3.88	1/4-28	.38	5.66	7.56	6.47	11.28	1.09
732	13.25	11.00	9.00	10.00	4.50	5/16-24	.50	6.48	9.63	8.06	13.69	1.56

Size	S	T Dia	Low Speed Shaft				High Speed Shaft				Approx. Weight (Lbs.)
			U +.0015 -.000	V	W-KEY		X +.000 -.001	Y	Z-KEY		
					Sq	Length			Sq	Length	
718	1.38	11/32	1.000	.78	See Page		.3745	.81	3/32	3/8	32
721	1.50	13/32	1.125	.88	128 For		.4995	1.31	1/8	5/8	40
726	2.16	13/32	1.4375	.84	Key Information		.4995	1.31	1/8	5/8	63
732	2.56	9/16	1.9375	1.00			.6245	1.56	3/16	13/16	120

* See Assemblies and Mounting Position, Page 74. Assemblies define output (slow speed) shaft projection with respect to input (high speed) shaft and mounted surfaces, viewed from end of input shaft.
Input may be rotated clockwise or counterclockwise. Arrows indicate relative rotation.

Reaction Rod Kits

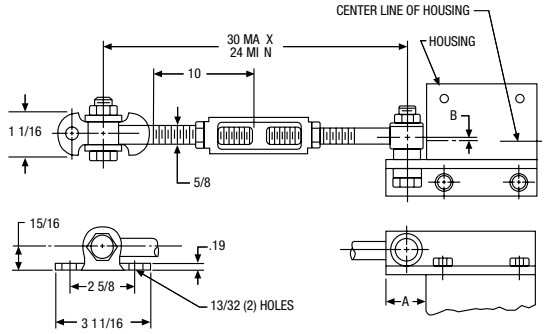

ALL DIMENSIONS IN INCHES

Size	A	B	Catalog Number	Kit No.
718	1.09	.09	X718-76K	69692
721	1.25	.03	X721-76K	69693
726	1.25	.22	X726-76K	69694
732	1.50	.53	X732-76K	69695

All hardware shown is included in the kits.

700 Series Double Reduction Non-Flanged Reducer Dimensions

WC700 Series

Basic Models (No Base); Right Angle Shafts

FOR ORDERING INFORMATION, see Page 56.
FOR RATING INFORMATION, See Pages 71, 77-81.

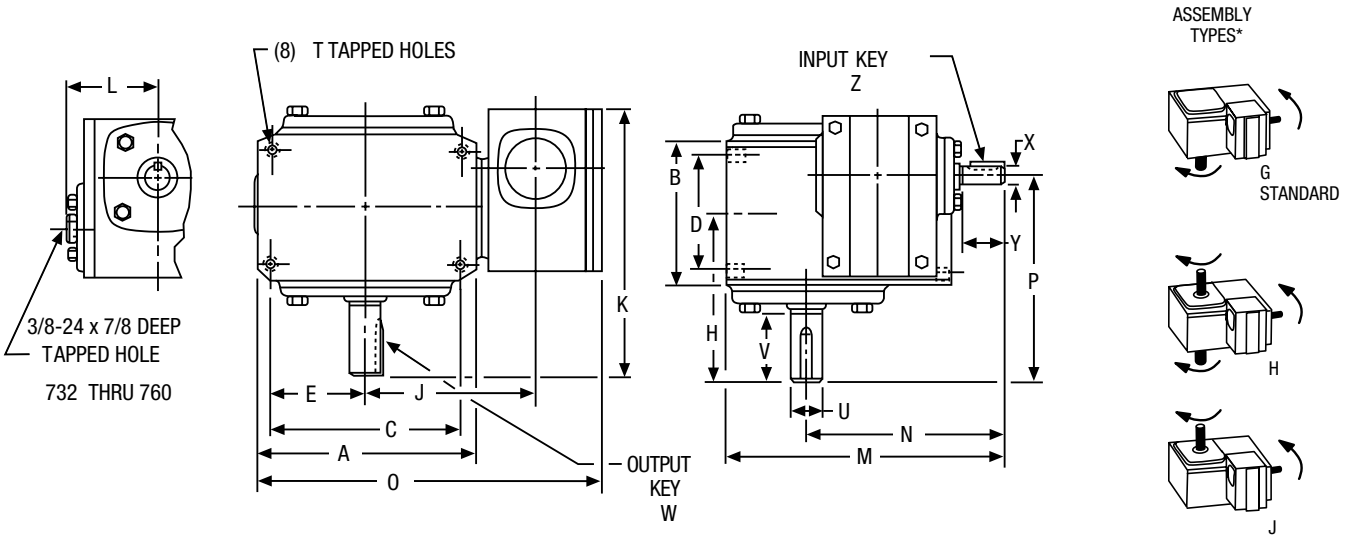

B

ALL DIMENSIONS IN INCHES

SIZE	A	B	C	D	E	H	J	K	L	M	N	O	P
713	4.25	2.88	3.25	2.00	1.63	4.00	3.75	6.19	—	5.94	4.22	7.41	5.00
718	5.50	3.69	4.19	2.75	2.09	4.31	4.44	6.50	—	6.69	4.63	8.72	5.31
721	6.00	3.81	5.00	2.88	2.50	4.69	4.94	7.63	—	8.25	5.97	9.69	6.03
726	7.38	4.44	6.38	3.38	3.19	5.63	5.66	8.56	—	9.47	6.53	11.09	6.97
730	8.12	5.25	7.00	4.00	3.50	6.75	6.12	10.44	—	11.09	7.84	12.45	8.50
732	9.00	5.88	7.50	4.00	3.75	7.06	6.48	10.75	4.94	11.63	8.13	13.69	8.81
738	10.00	6.38	8.50	4.75	4.25	7.75	7.27	11.84	5.50	12.75	8.88	15.16	9.81
752	13.13	7.38	11.00	5.81	5.50	9.06	9.28	14.00	7.19	16.81	11.50	19.34	11.69
760	14.50	8.13	12.75	6.38	6.38	10.00	9.56	15.88	7.94	19.94	13.44	21.13	13.25

Size	T		Low Speed Shaft				High Speed Shaft				Approx. Weight (LBS.)	Vertical Base Kit No. †	
	Tap Size	Depth	U +.000 -.001	V	W-KEY Sq	W-KEY Length	X +.000 -.001	Y	Z-KEY Sq	Z-KEY Length		High	Low
713	5/16-18	.50	.625	2.00	3/16	1	.3745	.81	3/32	3/8	15	56578	56579
718	5/16-18	.50	.875	1.78	3/16	1	.3745	.81	3/32	3/8	28	56582	56583
721	3/8-16	.56	1.000	2.09	1/4	1-1/4	.4995	1.31	1/8	5/8	37	56588	56589
726	3/8-16	.56	1.125	2.63	1/4	1-15/16	.4995	1.31	1/8	5/8	55	56596	56597
730	7/16-14	.88	1.250	3.25	1/4	2-1/4	.6245	1.56	3/16	13/16	73	65545	65546
732	7/16-14	.66	1.375	3.25	5/16	2-7/16	.6245	1.56	3/16	13/16	93	56600	56601
738	1/2-13	.75	1.625	3.50	3/8	2-1/4	.6245	1.56	3/16	13/16	132	56604	56605
752	5/8-11	1.00	2.000	4.16	1/2	2-15/16	.7495	2.38	3/16	1	235	56608	56609
760	5/8-11	1.00	2.250	4.56	1/2	3-3/8	.8745	2.31	3/16	1	298	56611	56612

* See Assemblies and Mounting Positions, Page 75.
† For Base Kits, see Page 129.

700 Series Double Reduction Non-Flanged Reducer Dimensions

HWC700 Series

Basic Models (No Base); Right Angle Shafts; Bored to Size Hollow Output

FOR ORDERING INFORMATION, see Page 56.
FOR RATING INFORMATION, See Pages 71, 77-81.

B

ASSEMBLY TYPES*

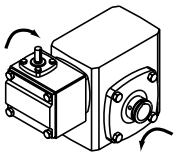

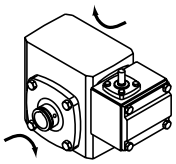

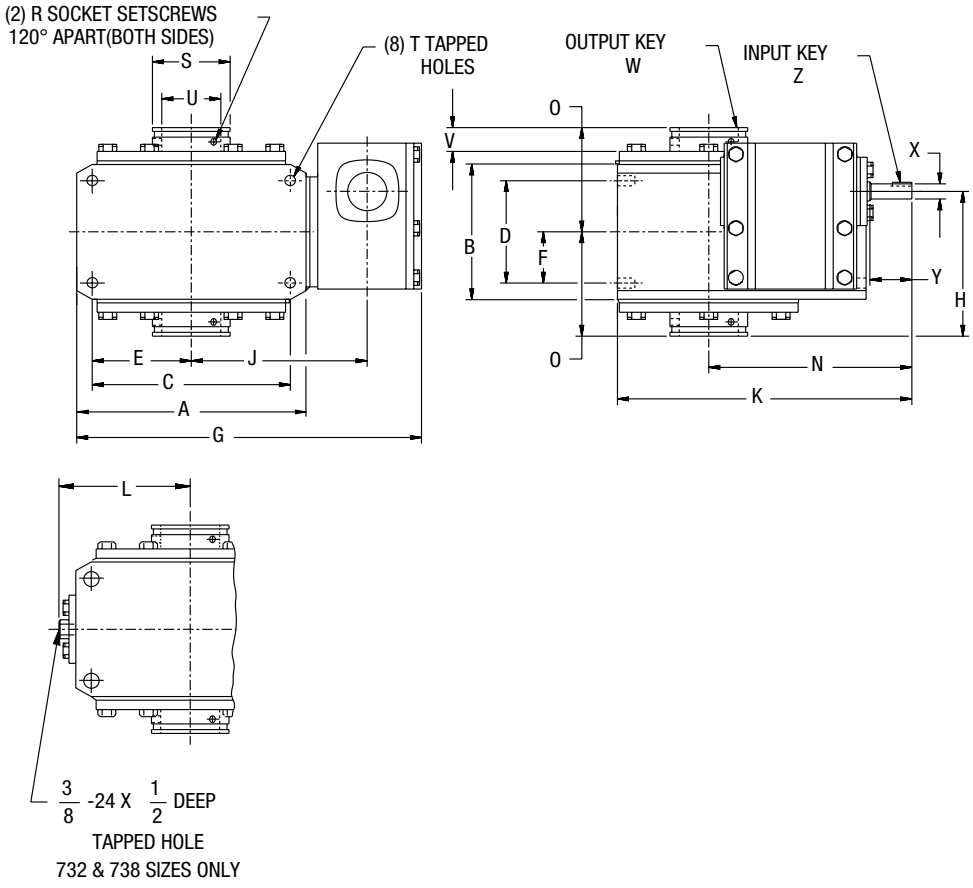

ALL DIMENSIONS IN INCHES

Size	A	B	C	D	E	F	G	H	J	K	L	N	O	R
713	4.25	2.88	3.25	2.00	1.63	1.00	7.41	3.50	3.75	5.94	—	4.22	2.50	#10-32
718	5.50	3.69	4.19	2.75	2.09	1.38	8.72	4.03	4.44	6.69	—	4.63	3.03	#10-32
721	6.00	3.81	5.00	2.88	2.50	1.44	9.69	4.55	4.94	8.25	—	5.97	3.22	1/4-28
726	7.38	4.44	6.38	3.38	3.19	1.69	11.09	4.77	5.66	9.47	—	6.53	3.44	5/16-24
730	8.12	5.25	7.00	4.00	3.50	2.00	12.45	5.94	6.12	11.09	—	7.84	4.19	5/16-24
732	9.00	5.88	7.50	4.00	3.75	2.00	13.69	6.06	6.48	11.63	4.94	8.13	4.31	5/16-24
738	10.00	6.38	8.50	4.75	4.25	2.38	15.16	6.87	7.27	12.75	5.50	8.88	4.81	5/16-24

Size	S	T		Low Speed Shaft				High Speed Shaft				Approx. Weight (Lbs.)
		Tap Size	Depth	Max U +.0015 -.000	V	W-KEY Sq	W-KEY Length	X +.000 -.001	Y	Z-KEY Sq	Z-KEY Length	
718	.88	5/16-18	.50	.625	.68			.3745	.81	3/32	3/8	17
721	1.38	5/16-18	.50	1.000	.74			.3745	.81	3/32	3/8	28
726	1.94	3/8-16	.56	1.4375	.87	See Page		.4995	1.31	1/8	5/8	37
732	2.50	3/8-16	.56	1.9375	.78	128 For		.4995	1.31	1/8	5/8	55
730	2.88	7/16-14	.88	2.1875	1.10	Key Information		.6245	1.56	3/16	13/16	76
732	2.88	7/16-14	.66	2.1875	.93			.6245	1.56	3/16	13/16	96
738	3.25	1/2-13	.75	2.4375	1.11			.6245	1.56	3/16	13/16	166

* See Assemblies and Mounting Positions, Page 75.
Input may be rotated clockwise or counterclockwise. Arrows indicate relative rotation.
See Page 128 for available bore sizes.

700 Series Double Reduction Non-Flanged Reducer Dimensions

HWC700 Series

R/L Position Mounting Bracket; Right Angle Shafts; Bored to Size Hollow Output

FOR ORDERING INFORMATION, see Page 56.
FOR RATING INFORMATION, See Pages 71, 77-81.

ASSEMBLY TYPES*

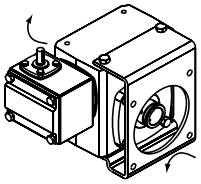

B

R Position

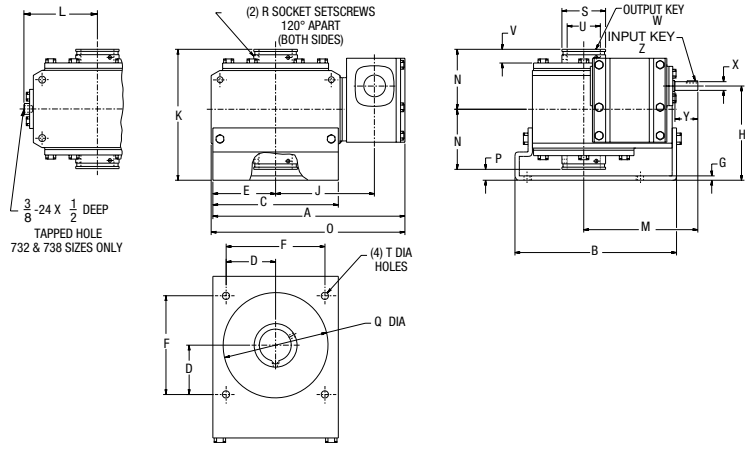

L Position

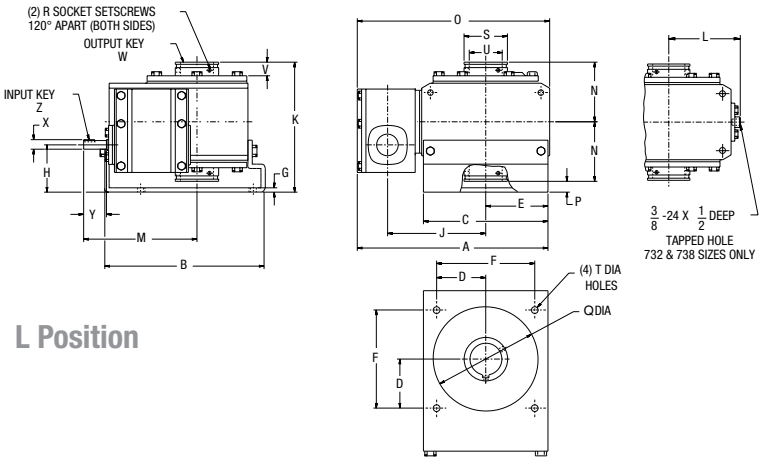

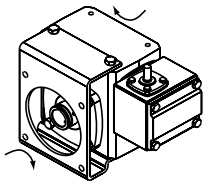

ALL DIMENSIONS IN INCHES

Size	A	B	C	D	E	F	G	H		J	K	L	M	N	O	P
								R Model	L Model							
713	7.40	5.55	4.24	1.77	2.12	3.54	.19	4.00	2.00	3.75	5.50	—	4.22	2.50	7.41	.50
718	8.38	6.66	4.82	2.08	2.41	4.16	.19	4.50	2.50	4.44	6.53	—	4.63	3.03	8.72	.47
721	9.57	7.47	5.76	2.30	2.88	4.60	.19	5.08	2.42	4.94	6.97	—	5.97	3.22	9.69	.53
726	11.00	9.25	7.18	2.83	3.59	5.66	.25	5.39	2.73	5.66	7.50	—	6.53	3.44	11.09	.62
730	12.39	10.38	8.00	3.18	4.00	6.38	.25	6.25	2.75	6.12	8.69	—	7.84	4.19	12.45	.31
732	13.44	10.91	8.50	3.54	4.25	7.08	.25	7.00	3.50	6.48	9.56	4.94	8.13	4.31	13.69	.94
738	14.91	11.84	9.50	4.06	4.75	8.12	.25	7.53	3.41	7.27	10.28	5.50	8.88	4.81	15.16	.66

Size	Q	R	S	T Dia.	Low Speed Shaft				High Speed Shaft				Approx. Weight (Lbs.)
					Max U +.0015 -.0000	V	W-KEY		X +.000 -.001	Y	Z-KEY		
							Sq	Length			Sq	Length	
713	3.62	#10-32	.88	11/32	.625	.68			.3745	.81	3/32	3/8	17
718	4.06	#10-32	1.38	11/32	1.000	.74			.3745	.81	3/32	3/8	34
721	4.50	1/4-28	1.94	13/32	1.4375	.87	See Page		.4995	1.31	1/8	5/8	42
726	6.00	5/16-24	2.50	13/32	1.9375	.78	128 For		.4995	1.31	1/8	5/8	66
730	7.00	5/16-24	2.88	13/32	2.1875	1.10	Key Information		.6245	1.56	3/16	13/16	86
732	7.00	5/16-24	2.88	9/16	2.1875	.93			.6245	1.56	3/16	13/16	126
738	8.00	5/16-24	3.25	9/16	2.4375	1.11			.6245	1.56	3/16	13/16	148

* See Assemblies and Mounting Positions, Page 75.
Input may be rotated clockwise or counterclockwise. Arrows indicate relative rotation. See Page 128 for available bore sizes.

700 Series Double Reduction Non-Flanged Reducer Dimensions

SWC700 Series

Basic Models (No Base); Right Angle Shafts; Hollow Output

FOR ORDERING INFORMATION, see Page 56.
FOR ADDITIONAL SIZES, See the H Series Page 88-89.
FOR RATING INFORMATION, See Pages 71, 77-81.

B

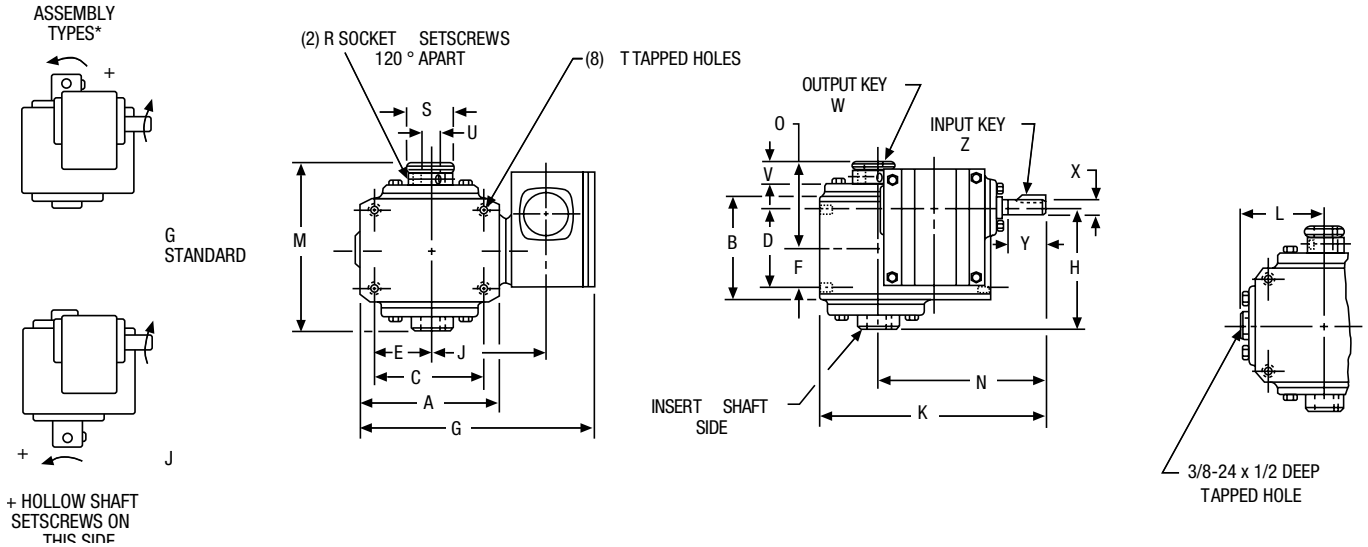

ALL DIMENSIONS IN INCHES

Size	A	B	C	D	E	F	G	H	J	K	M	N	O	R
718	5.50	3.69	4.19	2.75	2.09	1.38	8.72	3.59	4.44	6.69	5.69	4.63	3.09	#10-32
721	6.00	3.81	5.00	2.88	2.50	1.44	9.69	4.00	4.94	8.25	5.88	5.97	3.22	1/4-28
726	7.38	4.44	6.38	3.38	3.19	1.69	11.09	4.31	5.66	9.47	6.47	6.53	3.50	1/4-28
732	9.00	5.88	7.50	4.00	3.75	2.00	13.69	5.44	6.48	11.63	8.06	8.13	4.38	5/16-24

Size	S	T		Low Speed Shaft				High Speed Shaft				Approx. Weight (Lbs.)
				U		W-KEY		X		Z-KEY		
		Tap Size	Depth	+.0015 -.000	V	Sq	Length	+.000 -.001	Y	Sq	Length	
718	1.38	5/16-18	.50	1.000	.78	See Page		.3745	.81	3/32	3/8	27
721	1.50	3/8-16	.56	1.125	.88	128 For		.4995	1.31	1/8	5/8	35
726	2.16	3/8-16	.56	1.4375	.84	Key Information		.4995	1.31	1/8	5/8	52
732	2.56	7/16-14	.66	1.9375	1.00			.6245	1.56	3/16	13/16	91

* See Assemblies and Mounting Positions, Page 75. Assemblies define output (slow speed) shaft projection with respect to input (high speed) shaft and mounted surfaces, viewed from end of input shaft. Input may be rotated clockwise or counterclockwise. Arrows indicate relative rotation.

Reaction Rod Kits

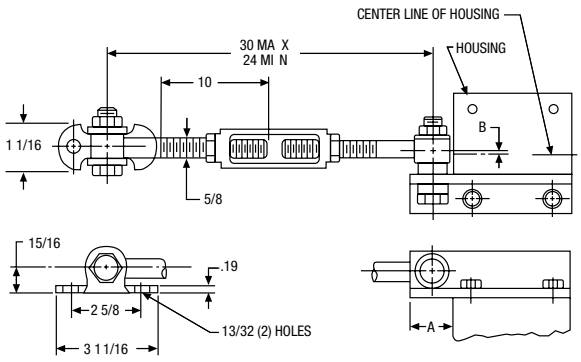

ALL DIMENSIONS IN INCHES

SIZE	A	B	Catalog Number	Kit No.
718	1.09	.09	X718-76K	69692
721	1.25	.03	X721-76K	69693
726	1.25	.22	X726-76K	69694
732	1.50	.53	X732-76K	69695

All hardware shown is included in the kits.

700 Series Double Reduction Non-Flanged Reducer Dimensions

SWC700 Series

V/W Position Mounting Flange; Right Angle Shafts; Hollow Output

FOR ORDERING INFORMATION, see Page 56.
FOR ADDITIONAL SIZES, See the H Series Page 88-89.
FOR RATING INFORMATION, See Pages 71, 77-81.

B

V Position

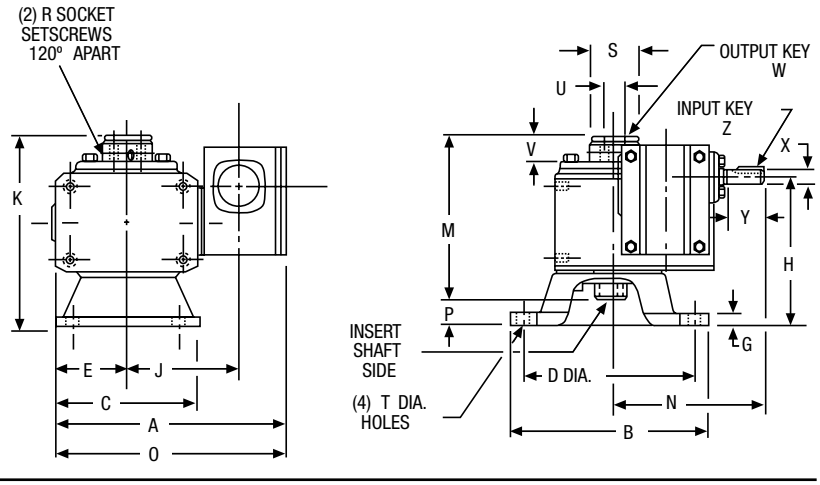

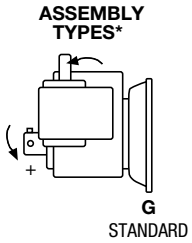

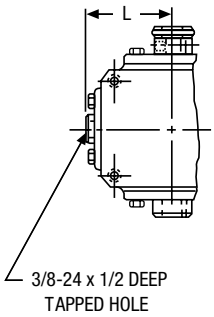

W Position

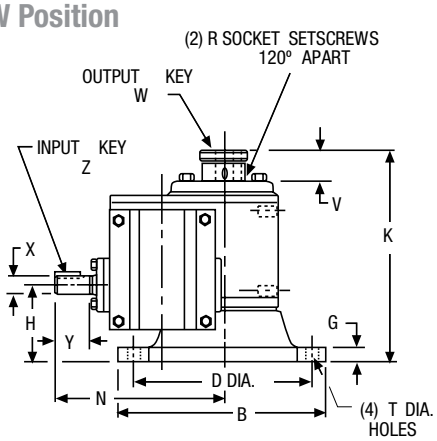

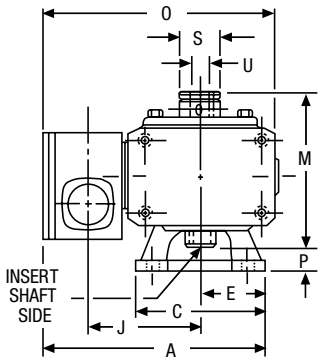

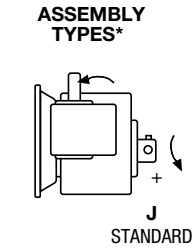

ALL DIMENSIONS IN INCHES

SIZE	A	B	C	D	E	G	H V Model	H W Model	K	L	M	N	O	P
718	8.41	6.75	4.88	5.88	2.44	.38	4.50	3.50	4.44	6.59	5.69	4.63	8.72	.91
721	9.56	7.38	5.75	6.50	2.88	.38	5.09	3.75	4.94	6.97	5.88	5.97	9.69	1.09
726	11.28	8.88	7.75	8.00	3.88	.38	5.41	4.08	5.66	7.56	6.47	6.53	11.28	1.09
732	13.25	11.00	9.00	10.00	4.50	.50	7.00	5.25	6.48	9.63	8.06	8.13	13.69	1.56

Size	R	S	T Dia.	Low Speed Shaft U +.0015 -.000	V	W-KEY Sq	W-KEY Length	High Speed Shaft X +.000 -.001	Y	Z-KEY Sq	Z-KEY Length	Approx. Weight (Lbs.)
718	#10-32	1.38	11/32	1.000	.78	See Page		.3745	.81	3/32	3/8	32
721	1/4-28	1.50	13/32	1.125	.88	128 For		.4995	1.31	1/8	5/8	40
726	1/4-28	2.16	13/32	1.4375	.84	Key Information		.4995	1.31	1/8	5/8	63
732	5/16-24	2.56	9/16	1.9375	1.00			.6245	1.56	3/16	13/16	120

* See Assemblies and Mounting Positions, Page 75. Assemblies define output (slow speed) shaft projection with respect to input (high speed) shaft and mounted surfaces, viewed from end of input shaft. Input may be rotated clockwise or counterclockwise. Arrows indicate relative rotation.

Notes

B



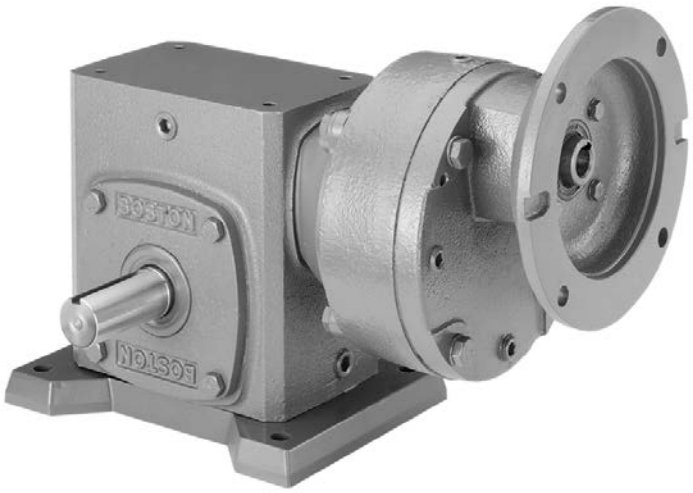

C

Section Contents

Product Reference Guide 104

Features 105

Numbering System / How to Order 106

Assemblies and Mounting Positions 107-108

Quick Selection Chart 109

Output RPM Selection Tables 110-118

Dimensions 119-126

700 Series Single Reduction
Flanged Reducers with HMF Series

Ordering Information – Page 106
Selection/Rating Information – Pages 109-118
Mountings – Pages 107-108



F700/QC700 BASIC W/HMF
Dimension Page 119

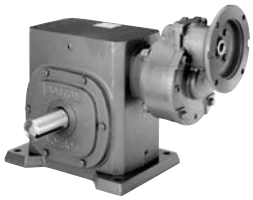

F700/QC700 B W/HMF
Dimension Page 120

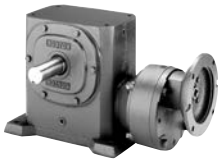

F700/QC700 A W/HMF
Dimension Page 121

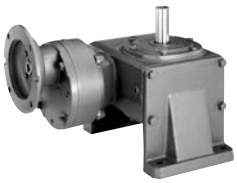

F700/QC700 C/D W/HMF
Dimension Page 122

C



F700 /QC700 E/F W/HMF
Dimension Page 122



F700/QC700 X W/HMF
Dimension Page 123



HF700/HQC700 W/HMF
Dimension Page 124



HF700/HQC700 R/L W/HMF
Dimension Page 125

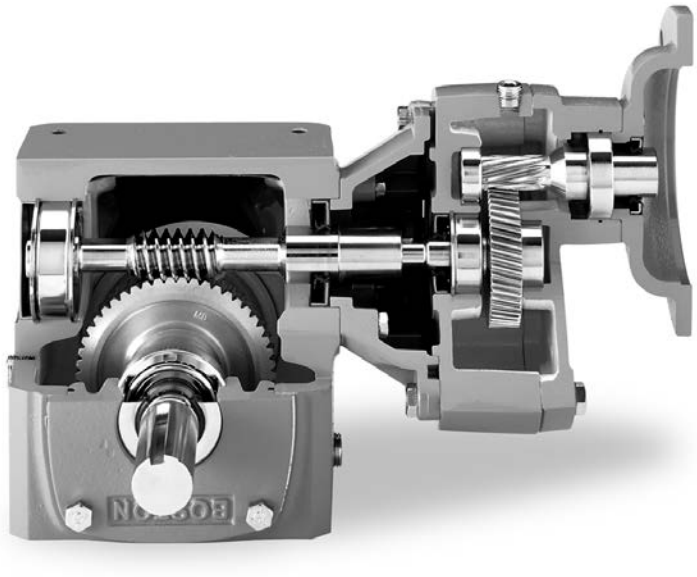

Combination 700 and HM Series Features

- Rugged housing of fine-grained, gear-quality cast iron provides maximum strength and durability. Greater rigidity and one-piece construction ensure precise alignment of the worm and gear. This housing construction also provides superior resistance to caustic washdown solutions, plus high heat dissipation and reduced noise level. Pipe plugs allow easy fill, level and drain in any mounting position.
- Housings are straddle-milled top and bottom for precise alignment of horizontal and vertical bases.
- Multi-position mounting flexibility - threaded bolt holes let you install the HM Series speed reducers in almost any position.
- Internal baffle assures positive leak-free venting.
- Large oil reservoir provides highly efficient heat dissipation and lubrication for longer operating life.
- High pressure angle on worm provides greater operating efficiency.
- Integral input worm and shaft design made from high-strength case-hardened alloy steel. Reducer sizes 710 through 730 have pre-lubricant ball bearings: 732 through 760 have tapered roller bearings. Double lip oil seals are standard.
- Super-finshed oil seal diameters on both input and output shafts provide extended seal life.
- High strength steel output shaft assures capacity for high torque and overhung loads
- High-strength bronze worm gear is straddle mounted between heavy-duty tapered roller bearings to increase thrust and overhung load capacities, sizes 713-760.

C

Numbering System / How to Order

When ordering reducers please include code letters for Style, Size, Base (if required), Ratio, Lubrication (if required), NEMA Mounting (if flanged reducer), Shaft Assembly and Motor (if required).

Example:

Application requirements: 125:1 reduction, 1 HP NEMA 140TC 1750 RPM, Service Class I, horizontal base, Klubersynth UH1 6-460 lubrication, with standard assembly.

HMF	2	5	K	B7	B7	A

Assembled to an:

F	732	B	25	K	B7	G

Each gearbox can be shipped separately or assembled.

HMF - 2 - 1.5 - K - B5 - B7 – B

Type
HMF-Quill Flange Input

Size
1
2
3

Ratio
1.5:1
2:1
3:1
4:1
5:1

Lubrication
K – Klubersynth UH1 6-460

Input Flange Size
B5 – 56C
B7 – 140TC
B9 – 180TC
B11 – 210TC

Output Flange Size
B5 – 56C
B7 – 140TC
B9 – 180TC
B11 – 210TC

Mounting Position
A
B
C
D

C

700 Series Right Angle Helical-Worm Gearbox - Double Reduction

SBK C H QC HMA 7 38 B – 300 K E Z T – B5 – HS 1 – P24

Input Shaft Style
Blank–Solid Projecting Input Shaft
F- Quill Style Motor Flange
RF – Coupling Style Motor Flange
QC – *Quick Connect* Motor Flange (close coupled)

Output Shaft Style
Blank–Solid Output Shaft
H – *BostMount* Hollow Output (setscrews both sides, bore size selectable)
S – Hollow Output (setscrews one side, bore size fixed)

Flange/Carrier/ Base Material
Blank–Standard material
C – Cast Iron

Reduction Type
HMA – Helical Multiplier 12 O'clock
HMB – Helical Multiplier 6 O' clock
HMC – Helical Multiplier 3 O'clock
HMD – Helical Multiplier 9 O'clock
WP – Planetary Torque Mulitplier

7 – 700 Series

Center Distance (inches)
13 – 1.33
18 – 1.75
21 – 2.06
26 – 2.62
30 – 3.00
32 – 3.25
38 – 3.75
52 – 5.13
60 – 6.00

Exact Gear Ratio
Ratio to 1

10	60
15	75
20	80
22.5	100
25	125
30	150
37.5	200
40	250
45	300
50	

Check Catalog – Or consult factory for availability

Lubrication
Blank–No lubrication
K – Klubersynth UH1 6-460
S – Mobil SHC 634
X – Mobil 600W

Vent
Blank–Standard Vent
P – Pressure Vent (5 psi)
Z – Posivent (sealed)

Endcap
(732-760 only)
E – Endcap (standard)

Input Oil Seal
Blank– Standard Seal
T – Two Standard Input Seals

***BostMount* Output Bore Code**
Refer to page 128 for complete offering
See catalog for availability by center distance.

Mounting Positions
Blank -No Lubrication Supplied
For Factory Prelubrication Indicate Mounting Position
1 – Standard Mounting (Worm over)
2-6–Refer to Mounting Positions in Catalog

Reducer Material/Paint
Blank–Cast Iron, Std. Gray paint
BK – Cast Iron, White *BostKleen* paint
SBK – Cast Iron, Stainless *BostKleen* paint
SS – Stainless Steel material- no paint

Base/Mounting Attachment*
Blank – No base kit required
A & B – Horizontal bases
C & E – Vertical High bases
D & F – Vertical Low bases
R/L – *BostMount* Output Bracket
X – Input Vertical Up
Y – Input Vertical Down
V/W – Hollow O/P with base
M/N – Hollow O/P with CFA
*See catalog for mounting configurations

NEMA Motor Mounting

BORE CODE	NEMA MOUNTING	INPUT BORE	KEYWAY
B4	42CZ	.500"	1/8 x 1/16
B5	56C	.625	3/16 x 3/32
B7	140TC/180C	.875	3/16 x 3/32
B9	180TC/210C	1.125	1/4 x 1/8
B11	210TC/250UC	1.375	5/16 x 5/32
B13	250TC	1.625	3/8 x 3/16

Blank Solid Input Shaft (No Flange)

Output Shaft Assembly
G Output Projection Opposite Input
H Double Output Projection
J Output Projection Same Side as Input
GS Stainless Output Projection Opposite Input
HS Stainless Double Output Projection
JS Stainless Output Projection Same Side as Input

Assemblies

Standard assemblies define output shaft (slow speed) projection with respect to input shaft (high speed) and mounting surfaces.

Type “A” and “B” are horizontal bases.

Types “C” and “E” are vertical high bases and types “D” and “F” are vertical low bases.

Type “X” is input vertical up.

Basic models and separate base kits are supplied unless otherwise specified. Assembly “H” available at a slight additional charge.

Input may rotate clockwise or counter clockwise.

FOR OTHER CONFIGURATIONS NOT SHOWN, CONTACT FACTORY.

No Base

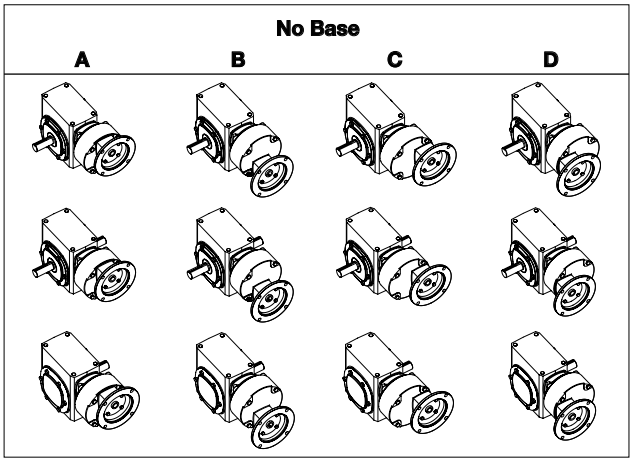

C Vertical High Base

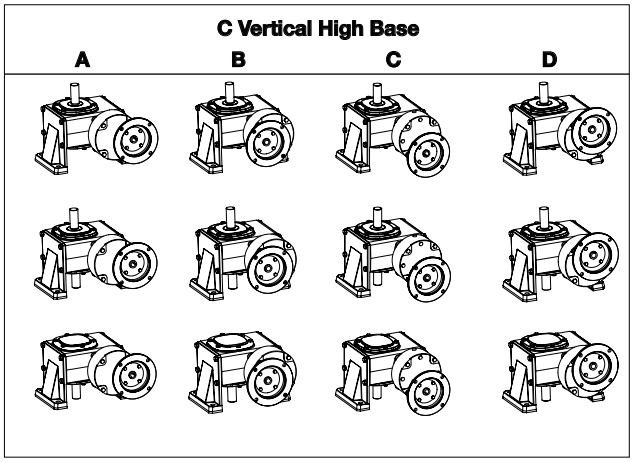

A Horizontal Base

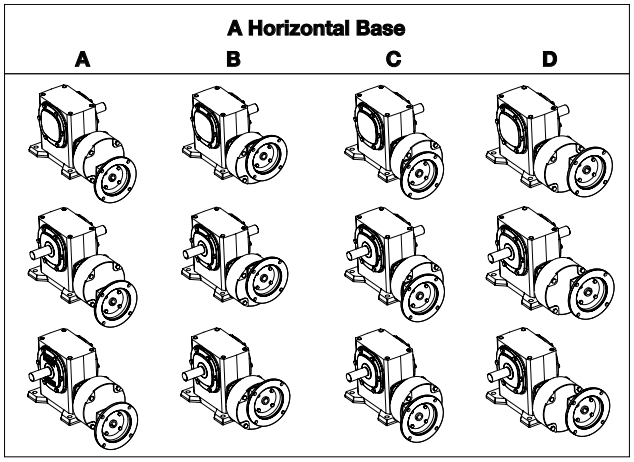

D Vertical Low Base

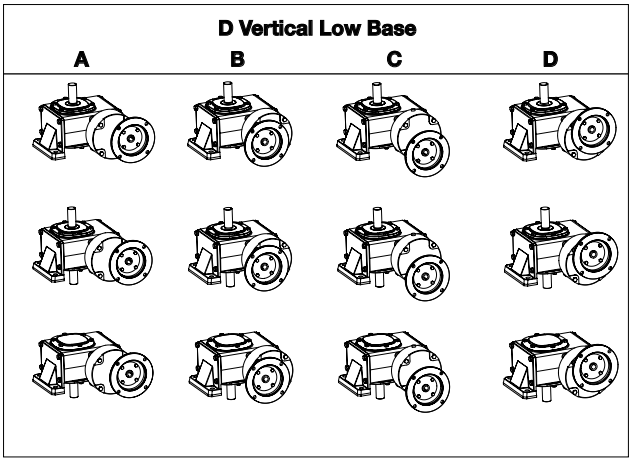

B Horizontal Base

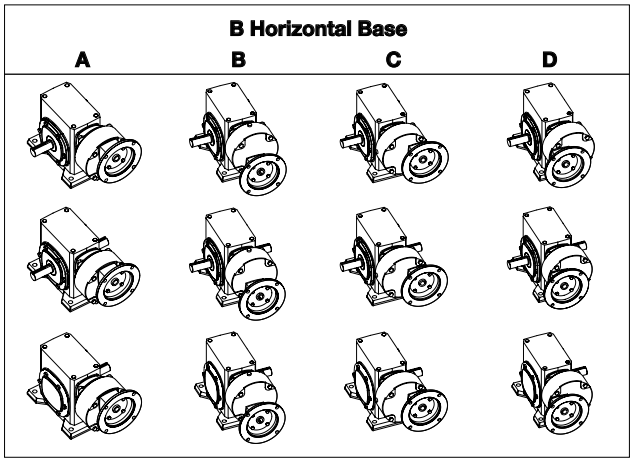

E Vertical High Base

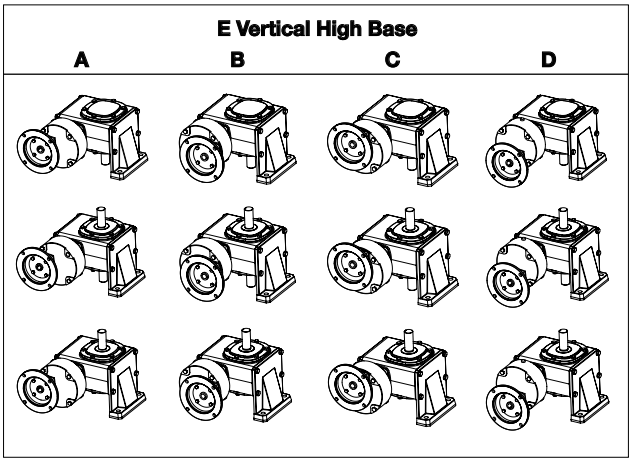

C

Mounting Data

Assemblies

Standard assemblies define output shaft (slow speed) projection with respect to input shaft (high speed) and mounting surfaces.

Type “A” and “B” are horizontal bases.

Types “C” and “E” are vertical high bases and types “D” and “F” are vertical low bases.

Type “X” is input vertical up.

Basic models and separate base kits are supplied unless otherwise specified. Assembly “H” available at a slight additional charge.

Input may rotate clockwise or counter clockwise.

FOR OTHER CONFIGURATIONS NOT SHOWN, CONTACT FACTORY.

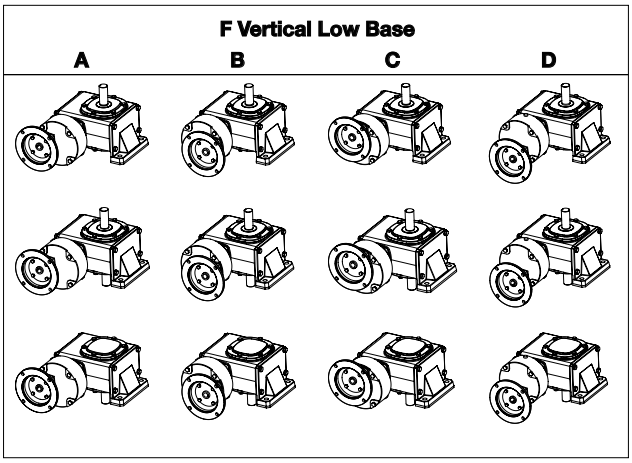

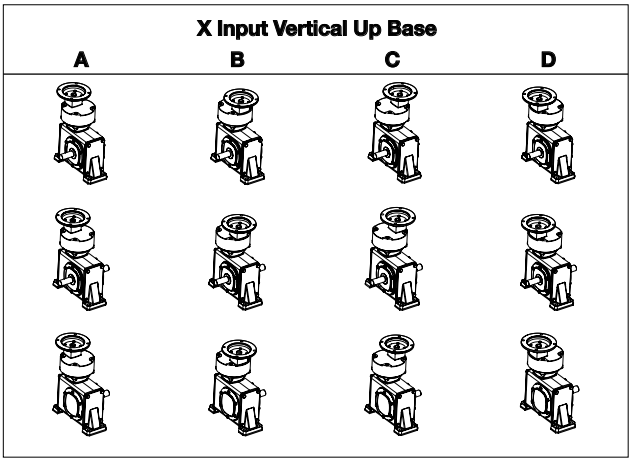

C

Quick Reference Model Selection Chart

CLASS I SERVICE
Single Reduction (1.0 Service Factor)

Reducer Ratio	Output RPM	Input Horsepower @ 1750 rpm													
		1/6	1/4	1/3	1/2	3/4	1	1-1/2	2	3	5	7-1/2	10	15	20
10	175		713	713	713	715	715	721	721	726	730	—	—	—	—
15	116.7		713	713	715	715	721	721	724	730	—	—	—	—	—
20	87.5	713	713	713	715	718	721	724	726	730	738	752	752	—	—
22.5	77.8	713	713	713	715	721	721	724	726	730	738	752	752	—	—
25	70	713	713	715	715	721	721	726	730	—	—	—	—	—	—
30	58.3	713	713	715	718	721	721	726	730	732	752	752	760	—	—
37.5	46.7	713	713	715	718	721	724	730	732	—	—	—	—	—	—
40	43.8	713	713	715	721	721	724	730	730	738	752	752	760	—	—
45	38.9	713	713	715	721	724	726	730	730	738	752	760	760	—	—
50	35	713	715	718	721	724	726	730	730	738	752	760	760	—	—
60	29.2	713	715	718	721	724	726	730	738	752	752	760	—	—	—
75	23.3	715	718	721	724	726	730	730	738	752	752	—	—	—	—
80	21.9	715	718	721	724	726	730	732	738	752	760	—	—	—	—
100	17.5	715	718	721	724	730	730	738	738	752	760	—	—	—	—
125	14	718	721	724	726	730	732	—	—	—	—	—	—	—	—
150	11.7	718	721	724	726	730	732	738	—	—	—	—	—	—	—
200	8.8	718	721	724	730	732	738	—	—	760	—	—	—	—	—
250	7	721	724	726	730	738	—	—	—	—	—	—	—	—	—
300	5.8	721	726	730	732	738	—	—	—	—	—	—	—	—	—

CLASS II SERVICE
Single Reduction (1.25 Service Factor)

Reducer Ratio	Output RPM	Input Horsepower @ 1750 rpm													
		1/6	1/4	1/3	1/2	3/4	1	1-1/2	2	3	5	7-1/2	10	15	20
10	175		713	713	713	715	721	724	726	730	—	—	—	—	—
15	116.7		713	713	715	721	721	724	726	730	—	—	—	—	—
20	87.5	713	713	715	718	721	724	726	732	732	752	752	752	—	—
22.5	77.8	713	713	715	718	721	724	726	730	732	752	752	—	—	—
25	70	713	715	715	721	721	724	726	730	—	—	—	—	—	—
30	58.3	713	715	715	721	721	724	730	730	738	752	752	760	—	—
37.5	46.7	713	715	718	721	724	726	730	732	—	—	—	—	—	—
40	43.8	713	715	718	721	724	726	730	732	752	752	760	760	—	—
45	38.9	713	715	718	721	724	726	730	738	752	752	760	—	—	—
50	35	713	718	721	724	726	730	730	738	752	752	760	—	—	—
60	29.2	715	718	721	724	726	730	732	738	752	—	760	—	—	—
75	23.3	715	721	721	724	730	730	738	752	752	—	760	—	—	—
80	21.9	715	721	721	724	730	730	738	752	752	—	—	—	—	—
100	17.5	718	721	724	726	730	732	738	—	752	—	—	—	—	—
125	14	721	724	726	730	732	—	—	—	—	—	—	—	—	—
150	11.7	721	724	726	730	732	738	738	—	752	—	—	—	—	—
200	8.8	721	724	726	730	738	—	—	—	—	—	—	—	—	—
250	7	724	726	730	732	—	—	—	—	—	—	—	—	—	—
300	5.8	724	726	732	738	—	—	—	—	—	—	—	—	—	—

Note: This chart is meant only as a guide. For actual ratings, see Pages 110-118.

C

Double Reduction Output RPM & Capacity Selection Tables

@ 1750 RPM Input

Output RPM	Ratio	Flanged Reducers (Gearmotor)								Motors*
		Gear Capacity			Available Models	Ratings				Catalog Nos.
		Output Torque (lb.in.)	HP		F, QC, HF, SF, HQC, RF	MTR HP	Output Torque (lb.in.)	Service Class	MTR Bore Code	230/460 VAC 3 Phase 60 Hz
			Input	Output	Gearbox Size K					
175	10 2x5	203	0.67	0.56	HMF1-2K-B5-B5 with F713-5-(B5)	1/2 1/3 1/4	152 101 76	II III III	B5 B5 B5	FUTF EUTF DUTF
		315	1	0.87	HMF1-2K-B5-B5 with F715-5-(B5)	1 3/4 1/2	315 236 158	I II III	B5 B5 B5	HUTF-5/8 GUTF FUTF
		380	1.21	1.06	HMF1-2K-B5-B5 with F718-5-(B5)	1 3/4 1/2	315 236 158	I II III	B5 B5 B5	HUTF-5/8 GUTF FUTF
		622	1.94	1.73	HMF2-2K-B7-B7 with F721-5-(B7)	2 1 1/2	621 466	I II	B7 B7	KUTF JUTF
					HMF2-2K-B5-B5 with F721-5-(B5)	1	311	III	B5	HUTF-5/8
		850	2.72	2.36	HMF2-2K-B7-B7 with F724-5-(B7)	2 1 1/2	624 468	II II	B7 B7	KUTF JUTF
					HMF2-2K-B5-B5 with F724-5-(B5)	1	312	III	B5	HUTF-5/8
		1140	3.91	3.17	HMF3-2K-B9-B9 with F726-5-(B9)	3	943	I	B9	LUTF
					HMF2-2K-B7-B7 with F726-5-(B7)	2 1 1/2	629 471	II III	B7 B7	KUTF JUTF
		1944	5.98	5.4	HMF3-2K-B9-B9 with F730-5-(B9)	5	1624	I	B9	MUTF
					HMF2-2K-B7-B7 with F730-5-(B7)	3 2	974 650	II III	B7 B7	LUTF KUTF
116.7	15 3x5	211	0.462	0.391	HMF1-3K-B5-B5 with F713-5-(B5)	1/3 1/4	152 114	II III	B5 B5	EUTF DUTF
		337	0.752	0.624	HMF1-3K-B5-B5 with F715-5-(B5)	3/4 1/2 1/3	334 223 148	I II III	B5 B5 B5	GUTF FUTF EUTF
		411	0.902	0.761	HMF1-3K-B5-B5 with F718-5-(B5)	3/4 1/2 1/3	342 228 152	I II III	B5 B5 B5	GUTF FUTF EUTF
		697	1.510	1.291	HMF2-3K-B7-B7 with F721-5-(B7)	1 1/2	691	I	B7	JUTF
					HMF2-3K-B5-B5 with F721-5-(B5)	1 3/4	461 346	II III	B5 B5	HUTF-5/8 GUTF
		962	2.06	1.798	HMF2-3K-B7-B7 with F724-5-(B7)	2 1 1/2	934 700	I II	B7 B7	KUTF JUTF
					HMF2-3K-B5-B5 with F724-5-(B5)	1	467	III	B5	HUTF-5/8
		1313	2.815	2.431	HMF2-3K-B7-B7 with F726-5-(B7)	2 1 1/2	932 700	II III	B7 B7	KUTF JUTF
		2326	4.93	4.31	HMF3-3K-B9-B9 with F730-5-(B9)	3	1414	II	B9	LUTF
					HMF2-3K-B7-B7 with F730-5-(B7)	2	943	III	B7	KUTF
87.5	20 2x10	257	0.426	0.357	HMF1-2K-B5-B5 with F713-10-(B5)	1/3 1/4 1/6	200 151 100	I II III	B5 B5 B5	EUTF DUTF CUTF
		370	0.604	0.514	HMF1-2K-B5-B5 with F715-10-(B5)	1/2 1/3 1/4	306 204 153	I II III	B5 B5 B5	FUTF EUTF DUTF
		510	0.829	0.708	HMF1-2K-B5-B5 with F718-10-(B5)	3/4 1/2 1/3	461 307 205	I II III	B5 B5 B5	GUTF FUTF EUTF
		777	1.26	1.08	HMF2-2K-B5-B5 with F721-10-(B7)	1 3/4 1/2	615 461 307	I II III	B5 B5 B5	HUTF-5/8 GUTF FUTF

* Totally Enclosed, Fan Cooled. For complete motor Catalog Numbers and additional motors, see our Electrical Products Catalog.

C

Double Reduction Output RPM & Capacity Selection Tables

@ 1750 RPM Input

Output RPM	Ratio	Flanged Reducers (Gearmotor)								Motors*
		Gear Capacity			Available Models	Ratings				Catalog Nos.
		Output Torque (lb.in.)	HP		F, QC, HF, SF, HQC, RF	MTR HP	Output Torque (lb.in.)	Service Class	MTR Bore Code	230/460 VAC 3 Phase 60 Hz
			Input	Output	Gearbox Size K					
87.5	20 2X10	1130	1.81	1.57	HMF2-2K-B7-B7 with F724-10-(B7)	1 1/2	938	I	B7	JUTF
					HMF2-2K-B5-B5 withF724-10-(B5)	1 3/4	625 469	II III	B5 B5	HUTF-5/8 GUTF
		1515	2.44	2.103	HMF2-2K-B7-B7 with F726-10-(B7)	2 1 1/2	1242 931	I II	B7 B7	KUTF JUTF
					HMF2-2K-B5-B5 with F726-10-(B5)	1	621	III	B5	HUTF-5/8 K
		2370	3.75	3.29	HMF3-2K-B9-B9 with F730-10-(B9)	3	1881	II	B9	LUTF
					HMF2-2K-B7-B7 with F730-10-(B7)	2	1254	III	B7	KUTF
		2660	4.23	3.69	HMF3-2K-B9-B9 with F732-10-(B9)	3	1886	II	B9	LUTF
		3700	5.92	5.14	HMF3-2K-B9-B9 with F738-10-(B9)	5 3	3125 1875	I II	B9 B9	MUTF LUTF
		8037	12.78	11.16	HMF3-2K-B11-B11 with RF752-10-(B11)	10 7 1/2	6286 4714	II III	B11 B11	PUTF NUTF
77.8	22.5 1.5X15	262	0.381	0.32	HMF1-1.5K-B5-B5 with F713-15-(B5)	1/3 1/4 1/6	226 170 113	I II III	B5 B5 B5	EUTF DUTF CUTF
		376	0.546	0.46	HMF1-1.5K-B5-B5 with F715-15-(B5)	1/2 1/3 1/4	337 225 169	I II III	B5 B5 B5	FUTF EUTF DUTF
		472	0.69	0.57	HMF1-1.5K-B5-B5 with F718-15-(B5)	1/2 1/3	334 223	II III	B5 B5	FUTF EUTF
		752	1.09	0.91	HMF1-1.5K-B5-B5 with F721-15-(B5)	1 3/4 1/2	674 506 337	I II III	B5 B5 B5	HUTF-5/8 GUTF FUTF
		1060	1.56	1.29	HMF2-1.5K-B7-B7 with F724-15-(B7)	1 1/2	1006	I	B7	JUTF
					HMF2-1.5K-B5-B5 with F724-15-(B5)	1 3/4	671 503	II III	B5 B5	HUTF-5/8 GUTF
		1425	2.07	1.73	HMF2-1.5K-B7-B7 with F726-15-(B7)	2 1 1/2	1353 1014	I II	B7 B7	KUTF JUTF
					HMF2-1.5K-B5-B5 with F726-15-(B5)	1	677	III	B5	HUTF-5/8
		2425	3.51	2.95	HMF3-1.5K-B9-B9 with F730-15-(B9)	3	2039	I	B9	LUTF
					HMF2-1.5K-B7-B7 with F730-15-(B7)	2 1 1/2	1359 1019	II III	B7 B7	KUTF JUTF
		2600	3.74	3.16	HMF3-1.5K-B9-B9 with F732-15-(B9)	3	2053	II	B9	LUTF
		3600	5.14	4.38	HMF3-1.5K-B9-B9 with F738-15-(B9)	5 3	3449 2070	I II	B9 B9	MUTF LUTF
		7700	10.82	9.37	HMF3-1.5K-B11-B11 with RF752-15-(B11)	10 7 1/2	7008 5256	I II	B11 B11	PUTF NUTF
					HMF3-1.5K-B9-B9 with RF752-15-(B9)	5	3504	III	B9	MUTF
		10800	15.18	13.14	HMF3-1.5K-B11-B11 with RF760-15-(B11)	10 7 1/2	7008 5256	II III	B11 B11	PUTF NUTF

* Totally Enclosed, Fan Cooled. For complete motor Catalog Numbers and additional motors, see our Electrical Products Catalog.

C

Double Reduction Output RPM & Capacity Selection Tables

@ 1750 RPM Input

Output RPM	Ratio	Flanged Reducers (Gearmotor)								Motors*
		Gear Capacity			Available Models	Ratings				Catalog Nos.
		Output Torque (lb.in.)	HP		F, QC, HF, SF, HQC, RF	MTR HP	Output Torque (lb.in.)	Service Class	MTR Bore Code	230/460 VAC 3 Phase 60 Hz
			Input	Output	Gearbox Size K					
70	25 5x5	225	0.307	0.25	HMF1-5K-B5-B5 with F713-5-(B5)	1/4 1/6	183 122	I II	B5 B5	DUTF CUTF
		353	0.486	0.392	HMF1-5K-B5-B5 with F715-5-(B5)	1/2 1/3 1/4	353 242 181	I II III	B5 B5 B5	FUTF EUTF DUTF
		435	0.6	0.483	HMF1-5K-B5-B5 with F718-5-(B5)	1/2 1/3 1/4	362 242 181	I II III	B5 B5 B5	FUTF EUTF DUTF
		756	1.00	0.84	HMF1-5K-B5-B5 with F721-5-(B5)	1 3/4 1/2	758 568 379	I II III	B5 B5 B5	HUTF-5/8 GUTF FUTF
		1081	1.394	1.201	HMF1-5K-B5-B5 with F724-5-(B5)	1 3/4 1/2	775 581 388	II II III	B5 B5 B5	HUTF-5/8 GUTF FUTF
		1451	1.89	1.612	HMF2-5K-B7-B7 with F726-5-(B7)	1-1/2	1163	II	B7	JUTF
					HMF2-5K-B5-B5 with F726-5-(B5)	1 3/4	775 581	II III	B5 B5	HUTF-5/8 GUTF
		2590	3.41	2.877	HMF2-5K-B7-B7 with F730-5-(B7)	1-1/2 2	1519 1139	II III	B7 B7	JUTF KUTF
58.3	30 2x15	277	0.31	0.256	HMF1-2K-B5-B5 with F713-15-(B5)	1/4 1/6	223 148	I II	B5 B5	DUTF CUTF
		400	0.45	0.37	HMF1-2K-B5-B5 with F715-15-(B5)	1/3 1/4 1/6	297 223 148	II II III	B5 B5 B5	EUTF DUTF CUTF
		510	0.572	0.472	HMF1-2K-B5-B5 with F718-15-(B5)	1/2 1/3 1/4	445 297 223	I II III	B5 B5 B5	FUTF EUTF DUTF
	30 3x10	842	0.96	0.78	HMF1-3K-B5-B5 with F721-10-(B5)	1 3/4 1/2 1/3	842 660 440 293	I II III III	B5 B5 B5 B5	HUTF-5/8 GUTF FUTF EUTF
		1241	1.345	1.148	HMF2-3K-B5-B5 with F724-10-(B5)	1 3/4 1/2	930 698 465	II II III	B5 B5 B5	HUTF GUTF FUTF
		1665	1.82	1.54	HMF2-3K-B7-B7 with F726-10-(B7)	1-1/2	1367	I	B7	JUTF
					HMF2-3K-B5-B5 with F726-10-(B5)	1 3/4	911 684	II III	B5 B5	HUTF GUTF
		2672	2.93	2.472	HMF2-3K-B7-B7 with F730-10-(B7)	2 1-1/2	1823 1367	II III	B7 B7	KUTF JUTF
					HMF2-3K-B5-B5 with F730-10-(B5)	1	911	III	B5	HUTF-5/8
		2890	3.132	2.673	HMF3-3K-B9-B9 with F732-10-(B9)	3	2766	I	B9	LUTF
					HMF2-3K-B7-B7 with F732-10-(B7)	2 1-1/2	1844 1382	II III	B7 B7	KUTF JUTF
		4044	4.432	3.741	HMF3-3K-B9-B9 with F738-10-(B9)	3 2	2734 1823	II III	B9 B9	LUTF KUTF
	30 2x15	8760	9.35	8.103	HMF3-2K-B11-B11 with RF752-15-(B11)	7-1/2	7016	II	B11	NUTF
					HMF3-2K-B9-B9 with RF752-15-(B9)	5 3	4677 1871	II III	B9 B9	MUTF LUTF
		12220	13.06	11.304	HMF3-2K-B11-B11 with RF760-15-(B11)	10 7-1/2	9345 7008	II II	B11 B11	PUTF NUTF
					HMF3-2K-B9-B9 with RF760-15-(B9)	5	4672	III	B9	MUTF

* Totally Enclosed, Fan Cooled. For complete motor Catalog Numbers and additional motors, see our Electrical Products Catalog.

@ 1750 RPM Input

Output RPM	Ratio	Flanged Reducers (Gearmotor)								Motors*
		Gear Capacity			Available Models	Ratings				Catalog Nos.
		Output Torque (lb.in.)	HP		F, QC, HF, SF, HQC, RF					
			Input	Output	Gearbox Size K	MTR HP	Output Torque (lb.in.)	Service Class	MTR Bore Code	230/460 VAC 3 Phase 60 Hz
46.7	37.5 1.5 x 25	491	0.49	0.36	HMF1-1.5K-B5-B5 with F718-25-(B5)	1/2 1/3 1/6	491 327 245	I II III	B5 B5 B5	FUTF EUTF CUTF
		792	0.75	0.58	HMF1-1.5K-B5-B5 with F721-25-(B5)	3/4 1/2 1/3	792 528 352	I II III	B5 B5 B5	GUTF FUTF EUTF
		1150	1.06	0.84	HMF1-1.5K-B5-B5 with F724-25-(B5)	1 3/4 1/2	1068 800 534	I II III	B5 B5 B5	HUTF-5/8 GUTF FUTF
		1525	1.35	1.11	HMF1-1.5K-B5-B5 with F726-25-(B5)	1 3/4	1109 832	II III	B5 B5	HUTF-5/8 GUTF
		2560	2.37	1.86	HMF2-1.5K-B7-B7 with F730-25-(B7)	2 1-1/2	2118 1589	I II	B7 B7	KUTF JUTF
					HMF2-1.5K-B5-B5 with F730-25-(B5)	1	1059	III	B5	HUTF-5/8
		3000	2.73	2.19	HMF2-1.5K-B7-B7 with F732-25-(B7)	2 1-1/2	2118 1589	II III	B7 B7	KUTF JUTF
43.8	40 4x10	279	0.25	0.194	HMF1-4K-B5-B5 with F713-10-(B5)	1/4 1/6	279 186	I II	B5 B5	DUTF CUTF
		404	0.36	0.28	HMF1-4K-B5-B5 with F715-10-(B5)	1/3 1/4 1/6	372 279 186	I II III	B5 B5 B5	EUTF DUTF CUTF
		566	0.468	0.393	HMF1-4K-B5-B5 with F718-10-(B5)	1/3 1/4	391 293	II III	B5 B5	EUTF DUTF
		880	0.79	0.61	HMF1-4K-B5-B5 with F721-10-(B5)	3/4 1/2 1/3	878 587 391	I II III	B5 B5 B5	GUTF FUTF EUTF
		1298	1.08	0.901	HMF1-4K-B5-B5 with F724-10-(B5)	1 3/4 1/2	1201 900 600	I II III	B5 B5 B5	HUTF-5/8 GUTF FUTF
		1754	1.46	1.218	HMF2-4K-B5-B5 with F726-10-(B5)	1 3/4	1201 900	II III	B5 B5	HUTF-5/8 GUTF
		2842	2.36	1.973	HMF2-4K-B7-B7 with F730-10-(B7)	2 1-1/2	2402 1802	I II	B7 B7	KUTF JUTF
					HMF2-4K-B5-B5 with F730-10-(B5)	1	1201	III	B5	HUTF-5/8
		3014	2.51	2.092	HMF2-4K-B7-B7 with F732-10-(B7)	2 1-1/2	2402 1802	II II	B7 B7	KUTF JUTF
		4242	3.52	2.94	HMF3-4K-B9-B9 with F738-10-(B9)	3	3604	I	B9	LUTF
		9413	7.74	6.53	HMF3-4K-B11-B11 with RF752-10-(B11)	7-1/2	9009	I	B11	NUTF
					HMF3-4K-B9-B9 with RF752-10-(B9)	5 3	6006 3604	II III	B9 B9	MUTF LUTF
		15112	12.28	10.49	HMF3-4K-B11-B11 with RF760-10-(B11)	10 7-1/2	12012 9009	II II	B11 B11	PUTF NUTF
					HMF3-4K-B9-B9 with RF760-10-(B9)	5	6006	III	B9	MUTF
38.9	45 3x15	296	0.25	0.183	HMF1-3K-B5-B5 with F713-15-(B5)	1/4 1/6	296 202	II II	B5 B5	DUTF CUTF
		425	0.346	0.262	HMF1-3K-B5-B5 with F715-15-(B5)	1/3 1/4 1/6	408 306 204	I II III	B5 B5 B5	EUTF DUTF CUTF
		545	0.428	0.336	HMF1-3K-B5-B5 with F718-15-(B5)	1/3 1/4 1/6	424 318 212	II II III	B5 B5 B5	EUTF DUTF CUTF
		856	0.66	0.53	HMF1-3K-B5-B5 with F721-15-(B5)	1/2 1/3	652 435	II III	B5 B5	FUTF EUTF

* Totally Enclosed, Fan Cooled. For complete motor Catalog Numbers and additional motors, see our Electrical Products Catalog.

C

Double Reduction Output RPM & Capacity Selection Tables

@ 1750 RPM Input

Output RPM	Ratio	Flanged Reducers (Gearmotor)								Motors*
		Gear Capacity			Available Models	Ratings				Catalog Nos.
		Output Torque (lb.in.)	HP		F, QC, HF, SF, HQC, RF	MTR HP	Output Torque (lb.in.)	Service Class	MTR Bore Code	230/460 VAC 3 Phase 60 Hz
			Input	Output	Gearbox Size K					
38.9	45 3x15	1279	0.951	0.789	HMF2-3K-B5-B5 with F724-15-(B5)	3/4 1/2	978 652	II III	B5 B5	GUTF FUTF
		1744	1.337	1.076	HMF2-3K-B5-B5 with F726-15-(B5)	1 3/4 1/2	1304 978 652	II III III	B5 B5 B5	HUTF-5/8 GUTF FUTF
		3051	2.319	1.883	HMF2-3K-B7-B7 with F730-15-(B7)	2 1-1/2	2608 1956	I II	B7 B7	KUTF JUTF
					HMF2-3K-B5-B5 with F730-15-(B5)	1	1304	III	B5	HUTF-5/8
		3126	2.34	1.929	HMF2-3K-B7-B7 with F732-15-(B7)	2 1-1/2	2671 2003	I II	B7 B7	KUTF JUTF
					HMF2-3K-B5-B5 wth F732-15-(B5)	1	1304	III	B5	HUT-5/8
		4380	3.24	2.703	HMF3-3K-B9-B9 with F738-15-(B9)	3	4054	I	B9	LUTF
		9913	7.25	6.118	HMF3-3K-B9-B9 with RF752-15-(B9)	5 3	6757 4054	II III	B9 B9	MUTF LUTF
		13874	10.15	8.563	HMF3-3K-B11-B11 with RF752-15-(B11)	10 7-1/2	13514 10135	I II	B11 B11	PUTF NUTF
35	50 5x10	283	0.205	0.157	HMF1-5K-B5-B5 with F713-10-(B5)	1/6	232	I	B5	CUTF
		411	0.296	0.228	HMF1-5K-B5-B5 with F715-10-(B5)	1/4 1/6 1/3	347 232 477	I II I	B5 B5 B5	DUTF CUTF EUTF
		577	0.403	0.32	HMF1-5K-B5-B5 with F718-10-(B5)	1/4 1/6	356 239	II III	B5 B5	DUTF CUTF
		903	0.655	0.501	HMF1-5K-B5-B5 with F721-10-(B5)	1/2 1/3	690 460	II III	B5 B5	FUTF EUTF
		1332	0.89	0.74	HMF2-5K-B5-B5 with F724-10-(B5)	3/4 1/2 1/3	1123 749 499	I II III	B5 B5 B5	GUTF FUTF EUTF
		1807	1.217	1.003	HMF2-5K-B5-B5 with F726-10-(B5)	1 3/4 1/2	1484 1113 742	I II III	B5 B5 B5	HUTF-5/8 GUTF FUTF
		2944	2.03	1.635	HMF2-5K-B7-B7 with F730-10-(B7)	2 1-1/2	2898 2174	I II	B7 B7	KUTF JUTF
					HMF2-5K-B5-B5 with F730-10-(B5)	1	1449	III	B5	HUTF-5/8
		3088	2.016	1.715	HMF2-5K-B7-B7 with F732-10-(B7)	2 1-1/2	2968 2226	I II	B7 B7	KUTF JUTF
					HMF2-5K-B5-B5 with F732-10-(B5)	1	1484	III	B5	HUTF-5/8
		4361	2.91	2.422	HMF3-5K-B9-B9 with F738-10-(B9)	3	4361	I	B9	LUTF
					HMF2-5K-B7-B7 with F738-10-(B7)	2 1-1/2	2989 2242	II III	B7	KUTF JUTF
		9695	6.39	5.384	HMF3-5K-B9-B9 with RF752-10-(B9)	5 3	7578 4547	II III	B9	MUTF LUTF
		15757	10.39	8.75	HMF3-5K-B11-B11 with RF760-10-(B11)	10 7-1/2	15155 11366	I II	B11	PUTF NUTF
					HMF3-5K-B9-B9 with RF760-10-(B9)	5	7578	III	B9	MUTF
29.2	60 4x15	302	0.192	0.14	HMF1-4K-B5-B5 with F713-15-(B5)	1/6	262	I	B5	CUTF
		438	0.278	0.203	HMF1-4K-B5-B5 with F715-15-(B5)	1/4 1/6	393 262	I II	B5 B5	DUTF CUTF
		560	0.343	0.259	HMF1-4K-B5-B5 with F718-15-(B5)	1/3 1/4 1/6	524 393 262	I II II	B5 B5 B5	EUTF DUTF CUTF

* Totally Enclosed, Fan Cooled. For complete motor Catalog Numbers and additional motors, see our Electrical Products Catalog.

Double Reduction Output RPM & Capacity Selection Tables

@ 1750 RPM Input

Output RPM	Ratio	Flanged Reducers (Gearmotor)								Motors*
		Gear Capacity			Available Models	Ratings				Catalog Nos.
		Output Torque (lb.in.)	HP		F, QC, HF, SF, HQC, RF	MTR HP	Output Torque (lb.in.)	Service Class	MTR Bore Code	230/460 VAC 3 Phase 60 Hz
			Input	Output	Gearbox Size K					
29.2	60 4X15	890	0.525	0.412	HMF1-4K-B5-B5 with F721-15-(B5)	1/2 1/3 1/4	848 566 424	I II III	B5 B5 B5	FUTF EUTF DUTF
		1334	0.796	0.617	HMF2-4K-B5-B5 with F724-15-(B5)	3/4 1/2 1/3	1257 838 556	I II III	B5 B5 B5	GUTF FUTF EUTF
		1838	1.09	0.851	HMF2-4K-B5-B5 with F726-15-(B5)	1 3/4 1/2	1676 1257 838	I II III	B5 B5 B5	HUTF-5/8 GUTF FUTF
		3220	1.92	1.49	HMF2-4K-B7-B7 with F730-15-(B7)	1-1/2	2514	I	B7	JUTF
					HMF2-4K-B5-B5 with F730-15-(B5)	1 3/4	1676 1257	II III	B5 B5	HUTF-5/8 GUTF
		3299	1.87	1.53	HMF2-4K-B7-B7 with F732-15-(B7)	1-1/2	2640	II	B7	JUTF
					HMF2-4K-B5-B5 with F732-15-(B5)	1 3/4	1781 1336	II III	B5	HUTF-5/8 GUTF
		4628	2.56	2.14	HMF2-4K-B7-B7 with F738-15-(B7)	2 1-1/2	3562 2671	II II	B7 B7	KUTF JUTF
					HMF2-4K-B5-B5 with F738-15-(B5)	1	1781	III	B5	HUTF-5/8
		10512	5.9	4.86	HMF3-4K-B9-B9 with RF752-15-(B9)	5 3	8905 4343	I III	B9 B9	MUTF LUTF
		14817	8.32	6.86	HMF3-4K-B11-B11 with RF760-15-(B11)	7-1/2 5	13357 8905	I II	B11 B11	NUTF MUTF
					HMF3-4K-B9-B9 with RF760-15-(B9)	3	5343	III	B9	LUTF
23.3	75 5X15	446	0.24	0.165	HMF1-5K-B5-B5 with F715-15-(B5)	1/6	314	II	B5	CUTF
		570	0.289	0.211	HMF1-5K-B5-B5 with F718-15-(B5)	1/4 1/6	491 327	I II	B5 B5	DUTF CUTF
		910	0.434	0.336	HMF1-5K-B5-B5 with F721-15-(B5)	1/3 1/4 1/6	698 524 349	II II III	B5 B5 B5	EUTF DUTF CUTF
		1367	0.66	0.505	HMF2-5K-B5-B5 with F724-15-(B5)	1/2 1/3	1034 690	II III	B5 B5	FUTF EUTF
		1895	0.92	0.701	HMF2-5K-B5-B5 with F726-15-(B5)	3/4 1/2 1/3	1548 1031 688	I II III	B5 B5 B5	GUTF FUTF EUTF
		3221	1.59	1.191	HMF2-5K-B7-B7 with F730-15-(B7)	1-1/2 1	3025 2017	I II	B7	JUTF HUTF-5/8
					HMF2-5K-B5-B5 with F730-15-(B5)	3/4	1512	III	B5	GUTF
		3402	1.58	1.258	HMF2-5K-B7-B7 with F732-15-(B7)	1-1/2 1	3221 2148	I II	B7 B7	JUTF HUTF-5/8
					HMF2-5K-B5-B5 with F732-15-(B5)	3/4	1611	III	B5	GUTF
		4776	2.22	1.766	HMF2-5K-B7-B7 with F738-15-(B7)	2 1-1/2	4295 3221	I II	B7 B7	KUTF JUTF
					HMF2-5K-B5-B5 with F738-15-(B5)	1	2148	III	B5	HUTF-5/8
		10872	5.05	4.019	HMF3-5K-B9-B9 with RF752-15-(B9)	5 3	10738 6443	I II	B9 B9	MUTF LUTF
		15383	6.98	5.687	HMF3-5K-B9-B9 with RF760-15-(B9)	5 3	11000 6600	II III	B9 B9	MUTF LUTF
21.9	80 4X20	448	0.228	0.156	HMF1-4K-B5-B5 with F715-20-(B5)	1/6	326	II	B5	CUTF
		627	0.303	0.218	HMF1-4K-B5-B5 with F718-20-(B5)	1/4 1/6	517 344	I II	B5 B5	DUTF CUTF

* Totally Enclosed, Fan Cooled. For complete motor Catalog Numbers and additional motors, see our Electrical Products Catalog.

C

Double Reduction Output RPM & Capacity Selection Tables

@ 1750 RPM Input

Output RPM	Ratio	Flanged Reducers (Gearmotor)								Motors*
		Gear Capacity			Available Models	Ratings				Catalog Nos.
		Output Torque (lb.in.)	HP		F, QC, HF, SF, HQC, RF	MTR HP	Output Torque (lb.in.)	Service Class	MTR Bore Code	230/460 VAC 3 Phase 60 Hz
			Input	Output	Gearbox Size K					
21.9	80 4x20	936	0.45	0.33	HMF1-4K-B5-B5 with F721-20-(B5)	1/3 1/4 1/6	698 524 349	II II III	B5 B5 B5	EUTF DUTF CUTF
		1395	0.657	0.485	HMF2-4K-B5-B5 with F724-20-(B5)	1/2 1/3	1062 707	II III	B5 B5	FUTF EUTF
		1864	0.8	0.648	HMF2-4K-B5-B5 with F726-20-(B5)	3/4 1/2 1/3	1697 1131 754	I II III	B5 B5 B5	GUTF FUTF EUTF
		3100	1.22	1.077	HMF2-4K-B5-B5 with F730-20-(B5)	1 3/4 1/2	2514 1886 1256	II II III	B5 B5 B5	HUTF-5/8 GUTF FUTF
		3677	1.646	1.278	HMF2-4K-B7-B7 withF732-20-(B7)	1-1/2	3352	I	B7	JUTF
					HMF2-4K-B5-B5 with F732-20-(B5)	1 3/4	2234 1676	II III	B5	HUTF-5/8 GUTF
		5285	2.337	1.836	HMF2-4K-B7-B7 with F738-20-(B7)	2 1-1/2	4525 3394	I II	B7 B7	KUTF JUTF
					HMF2-4K-B5-B5 with F738-20-(B5)	1	2263	III	B5	HUTF-5/8
		10450	4.68	3.63	HMF3-4K-B9-B9 with RF752-20-(B9)	3	6705	II	B9	LUTF
		15140	6.56	5.261	HMF3-4K-B9-B9 with RF760-20-(B9)	5 3	11537 6922	II III	B9 B9	MUTF LUTF
17.5	100 5x20	457	0.19	0.127	HMF1-5K-B5-B5 with F715-20-(B5)	1/6	402	I	B5	CUTF
		643	0.259	0.179	HMF1-5K-B5-B5 with F718-20-(B5)	1/4 1/6	620 413	I II	B5 B5	DUTF CUTF
		957	0.37	0.27	HMF1-5K-B5-B5 with F721-20-(B5)	1/3 1/4 1/6	861 646 431	I II III	B5 B5 B5	EUTF DUTF CUTF
		1435	0.562	0.398	HMF2-5K-B5-B5 with F724-20-(B5)	1/2 1/3 1/4	1275 850 637	I II III	B5 B5 B5	FUTF EUTF DUTF
		1912	0.68	0.531	HMF2-5K-B5-B5 with F726-20-(B5)	1/2 1/3	1379 1000	II III	B5 B5	FUTF EUTF
		3225	1.15	0.895	HMF2-5K-B5-B5 with F730-20-(B5)	1 3/4 1/2	2759 2069 1379	I II III	B5 B5 B5	HUTF-5/8 GUTF FUTF
		3721	1.4	1.003	HMF2-5K-B5-B5 with F732-20-(B5)	1 3/4 1/2	2654 1990 1327	II II III	B5 B5 B5	HUTF-5/8 GUTF FUTF
		5418	2.01	1.504	HMF2-5K-B7-B7 with F738-20-(B7)	2 1-1/2	5378 4033	I II	B7 B7	KUTF JUTF
					HMF2-5K-B5-B5 with F738-20-(B5)	1	2689	III	B5	HUTF-5/8
		10744	3.89	2.98	HMF3-5K-B9-B9 with RF752-20-(B9)	3	8276	II	B9	LUTF K
		15622	5.43	4.338	HMF3-5K-B9-B9 with RF760-20-(B9)	5 3	13968 8381	I II	B9 B9	MUTF LUTF
14	125 5X25	609	0.205	0.135	HMF1-5K-B5-B5 with F718-25-(B5)	1/6	495	I	B5	CUTF
		933	0.31	0.21	HMF1-5K-B5-B5 with F721-25-(B5)	1/4 1/6	917 611	I II	B5 B5	DUTF CUTF
		1407	0.46	0.313	HMF2-5K-B5-B5 with F724-25-(B5)	1/3 1/4 1/6	1018 764 509	II II III	B5 B5 B5	EUTF DUTF CUTF
		1937	0.59	0.43	HMF2-5K-B5-B5 with F726-25-(B5)	1/2 1/3 1/4	1637 1091 818	I II III	B5 B5 B5	FUTF EUTF DUTF

* Totally Enclosed, Fan Cooled. For complete motor Catalog Numbers and additional motors, see our Electrical Products Catalog.

@ 1750 RPM Input

Output RPM	Ratio	Flanged Reducers (Gearmotor)								Motors*
		Gear Capacity			Available Models	Ratings				Catalog Nos.
		Output Torque (lb.in.)	HP		F, QC, HF, SF, HQC, RF	MTR HP	Output Torque (lb.in.)	Service Class	MTR Bore Code	230/460 VAC 3 Phase 60 Hz
			Input	Output	Gearbox Size K					
14	125 5x25	3158	0.95	0.701	HMF2-5K-B5-B5 with F730-25-(B5)	1 3/4 1/2	3158 2423 1615	I II III	B5 B5 B5	HUTF-5/8 GUTF FUTF
		3373	1.1	0.75	HMF2-5K-B5-B5 with F732-25-(B5)	1 3/4 1/2	3230 2423 1615	I II III	B5 B5 B5	HUTF-5/8 GUTF FUTF
11.7	150 5x30	663	0.186	0.123	HMF1-5K-B5-B5 with F718-30-(B5)	1/6	594	I	B5	CUTF
		977	0.28	0.18	HMF1-5K-B5-B5 with F721-30-(B5)	1/4 1/6	877 585	I II	B5 B5	DUTF CUTF
		1415	0.404	0.263	HMF2-5K-B5-B5 with F724-30-(B5)	1/3 1/4 1/6	1170 877 585	I II III	B5 B5 B5	EUTF DUTF CUTF
		1969	0.562	0.366	HMF2-5K-B5-B5 with F726-30-(B5)	1/2 1/3 1/4	1756 1170 877	I II III	B5 B5 B5	FUTF EUTF DUTF
		3404	1.002	0.632	HMF2-5K-B5-B5 with F730-30-(B5)	1 3/4 1/2	3404 2553 1702	I II III	B5 B5 B5	HUTF-5/8 GUTF FUTF
		3788	1.1	0.73	HMF2-5K-B5-B5 with F732-30-(B5)	1 3/4 1/2	3404 2553 1702	I II III	B5 B5 B5	HUTF-5/8 GUTF FUTF
		5303	1.39	0.984	HMF2-5K-B5-B5 with F738-30-(B5)	1 3/4	3824 2868	II II	B5 B5	HUTF-5/8 GUTF
		11381	3.11	2.113	HMF3-5K-B9-B9 with RF752-30-(B9)	3	11000	II	B9	LUTF
		15932	4.08	2.958	HMF3-5K-B9-B9 with RF760-30-(B9)	3	11000	II	B9	LUTF
8.8	200 5x40	643	0.162	0.089	HMF1-5K-B5-B5 with F718-40-(B5)	1/6	640	I	B5	CUTF
		957	0.25	0.13	HMF1-5K-B5-B5 with F721-40-(B5)	1/4 1/6	950 640	I II	B5 B5	DUTF CUTF
		1435	0.35	0.199	HMF2-5K-B5-B5 with F724-40-(B5)	1/3 1/4 1/6	1327 995 663	I II III	B5 B5 B5	EUTF DUTF CUTF
		1912	0.464	0.265	HMF2-5K-B5-B5 with F726-40-(B5)	1/3 1/4	1374 1030	II III	B5 B5	EUTF DUTF
		3303	0.775	0.459	HMF2-5K-B5-B5 with F730-40-(B5)	3/4 1/2 1/3	3195 2130 1420	I II III	B5 B5 B5	GUTF FUTF EUTF
		3636	0.8	0.505	HMF2-5K-B5-B5 with F732-40-(B5)	3/4 1/2 1/3	3405 2270 1513	I II III	B5 B5 B5	GUTF FUTF EUTF
		5418	1.17	0.752	HMF2-5K-B5-B5 with F738-40-(B5)	1 3/4 1/2	4609 3457 2305	I II III	B5 B5 B5	HUTF-5/8 CUTF FUTF
		15623	3.19	2.169	HMF3-5K-B9-B9 with F760-40-(B9)	3	14457	I	B9	LUTF

* Totally Enclosed, Fan Cooled. For complete motor Catalog Numbers and additional motors, see our Electrical Products Catalog.

C

Double Reduction Output RPM & Capacity Selection Tables

@ 1750 RPM Input

Output RPM	Ratio	Flanged Reducers (Gearmotor)								Motors*
		Gear Capacity			Available Models	Ratings				Catalog Nos.
		Output Torque (lb.in.)	HP		F, QC, HF, SF, HQC, RF					
			Input	Output	Gearbox Size K	MTR HP	Output Torque (lb.in.)	Service Class	MTR Bore Code	230/460 VAC 3 Phase 60 Hz
7	250 5x50	915	0.18	0.10	HMF1-5K-B5-B5 with F721-50-(B5)	1/6	844	I	B5	CUTF
		1340	0.274	0.149	HMF2-5K-B5-B5 with F724-50-(B5)	1/4 1/6	1222 814	I II	B5 B5	DUTF CUTF
		1848	0.359	0.205	HMF2-5K-B5-B5 with F726-50-(B5)	1/3 1/4 1/6	1717 1288 858	I II III	B5 B5 B5	EUTF DUTF CUTF
		3008	0.604	0.334	HMF2-5K-B5-B5 with F730-50-(B5)	1/2 1/3 1/4	2488 1659 1244	I II III	B5 B5 B5	FUTF EUTF DUTF
		3210	0.634	0.356	HMF2-5K-B5-B5 with F732-50-(B5)	1/2 1/3	2488 1659	II III	B5 B5	FUTF EUTF
		4373	0.862	0.486	HMF2-5K-B5-B5 with F738-50-(B5)	3/4 1/2 1/3	3798 2532 1688	I II III	B5 B5 B5	GUTF FUTF EUTF
5.8	300 5x60	877	0.17	0.08	HMF1-5K-B5-B5 with F721-60-(B5)	1/6	873	I	B5	CUTF
		1255	0.239	0.116	HMF2-5K-B5-B5 with F724-60-(B5)	1/6	873	II	B5	CUTF
		1725	0.31	0.16	HMF2-5K-B5-B5 with F726-60-(B5)	1/4 1/6	1388 925	II II	B5 B5	DUTF
		2868	0.43	0.265	HMF2-5K-B5-B5 with F730-60-(B5)	1/3 1/4	2200 1650	II II	B5 B5	EUTF DUTF
					HMF2-5K-B5-B5 with F730-60-(B5)	1/6	1100	III	B5	CUTF
		3015	0.522	0.278	HMF2-5K-B5-B5 with F732-60-(B5)	1/2 1/3 1/6	2881 1921 1440	I II III	B5 B5 B5	FUTF EUTF CUTF
		4272	0.73	0.395	HMF2-5K-B5-B5 with F738-60-(B5)	3/4 1/2 1/3	4272 2933 1955	I II III	B5 B5 B5	GUTF FUTF EUTF

* Totally Enclosed, Fan Cooled. For complete motor Catalog Numbers and additional motors, see our Electrical Products Catalog.

C

HMF and 700 Series Double Reduction Flanged Reducer Dimensions

F700/QC700 Series Flanged Quill/Flanged Coupling Types

Basic Models (No Base)

FOR ORDERING INFORMATION, see Page 106.
FOR RATING INFORMATION, See Pages 109-118.

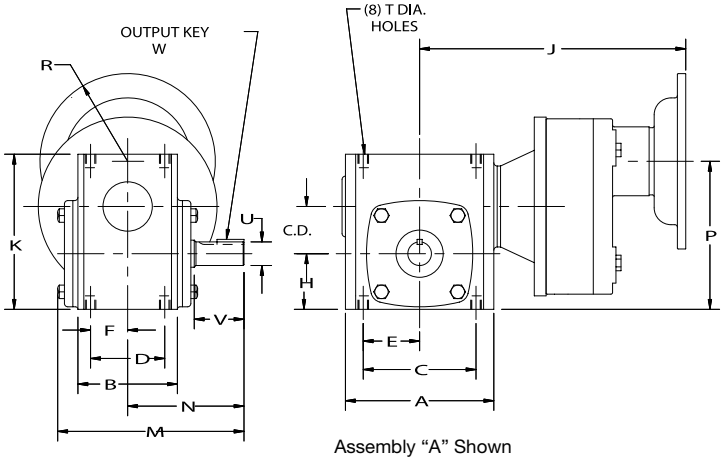

Assembly "A" Shown

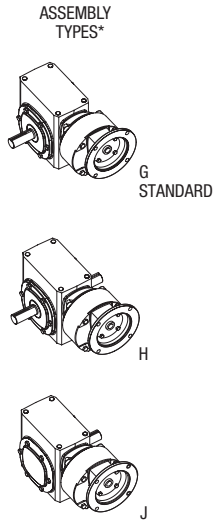

ALL DIMENSIONS IN INCHES

Size	C.D.	A	B	C	D	E	F	H	J-NEMA Mounting F700 56C	J-NEMA Mounting F700 140TC	J-NEMA Mounting F700 180TC 210C	J-NEMA Mounting QC700 56C	J-NEMA Mounting QC700 140TC	J-NEMA Mounting QC700 180TC 210TC 250TC	K	L	M
713	1.33	4.25	2.88	3.25	2.00	1.63	1.00	1.72	9.12	—	—	10.65	—	—	4.64	—	6.03
715	1.54	5.13	3.69	4.19	2.75	2.09	1.38	1.91	9.68	—	—	11.29	—	—	5.38	—	6.84
718	1.75	5.50	3.69	4.19	2.75	2.09	1.38	2.06	9.87	—	—	11.47	—	—	5.75	—	6.81
721	2.06	6.00	3.81	5.00	2.88	2.50	1.44	2.28	10.24	10.69	—	11.94	12.39	—	6.38	—	7.28
724	2.38	6.38	4.06	5.00	2.88	2.50	1.44	2.50	10.88	10.88	11.32	12.58	12.58	13.45	6.94	—	7.81
726	2.62	7.38	4.44	6.38	3.38	3.19	1.69	2.94	11.38	11.38	11.82	13.02	13.02	13.94	8.00	—	8.53
730	3.00	8.12	5.25	7.00	4.00	3.50	2.00	3.25	11.83	11.83	14.07	13.47	13.47	16.17	8.88	—	10.02
732	3.25	9.00	5.88	7.50	4.00	3.75	2.00	3.50	12.19	12.19	14.43	13.83	13.84	16.57	9.38	4.94	10.81
738	3.75	10.00	6.38	8.50	4.75	4.25	2.38	3.88	12.69	12.69	14.93	14.34	14.34	17.71	10.44	5.50	11.88
752	5.16	13.13	7.38	11.00	5.81	5.50	2.91	5.31	—	—	—	—	—	23.43†	13.75	7.19	13.81
760	6.00	14.50	8.13	12.75	6.38	6.38	3.19	6.50	—	—	—	—	—	23.43†	16.50	7.94	15.31

Size	N	P		R-NEMA 56C 140TC	R-NEMA 180TC 210TC 250TC	T Tap Size	T Depth	Low Speed Shaft U +.000 -.001	Low Speed Shaft V	Low Speed Shaft W-Key Sq.	Low Speed Shaft W-Key Length	Approx. Weight (LBS.) F700 (1)	Approx. Weight (LBS.) QC700 (1)	Fan Kit No.**
713	4.00	4.74	—	3.31	—	5/16-18	.50	.625	2.00	3/16	1	30	33	—
715	4.31	5.12	—	3.31	—	5/16-18	.50	.750	1.78	3/16	1	36	42	—
718	4.31	5.49	—	3.31	—	5/16-18	.50	.875	1.78	3/16	1	38	45	—
721	4.69	6.02	7.22	3.31	—	3/8-16	.56	1.000	2.09	1/4	1-1/4	47	51	—
724	5.09	7.76	—	3.31	4.63	3/8-16	.56	1.125	2.38	1/4	1-1/4	56	61	—
726	5.63	8.44	—	3.31	4.63	3/8-16	.56	1.125	2.63	1/4	1-15/16	71	72	—
730	6.75	9.11	—	3.31	4.63	7/16-14	.88	1.250	3.25	1/4	2-1/4	91	97	—
732	7.06	9.63	—	3.31	4.63	7/16-14	.66	1.375	3.25	5/16	2-7/16	109	109	51450
738	7.75	10.51	—	3.31	4.63	1/2-13	.81	1.625	3.50	3/8	2-1/4	142	142	51451
752	9.06	13.38	—	—	4.63	5/8-11	1.00	2.000	4.16	1/2	2-15/16	—	271†	51452
760	10.00	15.38	—	—	4.63	5/8-11	1.00	2.250	4.56	1/2	3-3/8	—	320†	51453

* See Assemblies and Mounting Positions, Pages 107 and 108.
** For Fan Kits, see Page 130.
(1) For sizes 724 and larger using HM3 add 25 lbs.
† 752 & 760 SIZES AVAILABLE ONLY IN RF-FLANGED COUPLING TYPE. Reference Page 245 for flange details.

HMF and 700 Series Double Reduction Flanged Reducer Dimensions

F700/QC700 Series Flanged Quill/Flanged Coupling Types

B Position Horizontal Base

FOR ORDERING INFORMATION, see Page 106.
FOR RATING INFORMATION, See Pages 109-118.

ASSEMBLY TYPES*

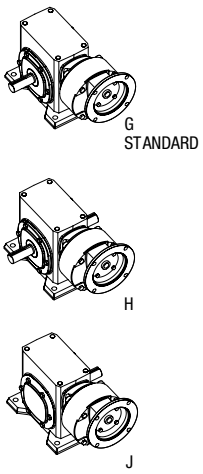

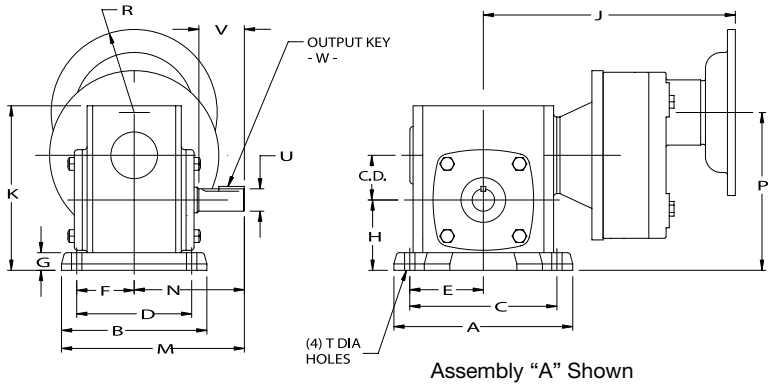

Assembly "A" Shown

ALL DIMENSIONS IN INCHES

Size	C.D.	A	B	C	D	E	F	G	H	J-NEMA Mounting F700 56C	J-NEMA Mounting F700 140TC	J-NEMA Mounting F700 180TC 210TC	J-NEMA Mounting QC700 56C	J-NEMA Mounting QC700 140TC	J-NEMA Mounting QC700 180TC 210TC 250TC	K	M
713	1.33	5.38	4.19	4.38	3.31	2.19	1.66	.53	2.25	9.12	—	—	10.65	—	—	5.19	6.09
715	1.54	6.44	5.44	5.25	4.31	2.63	2.16	.59	2.50	9.68	—	—	11.29	—	—	5.97	7.03
718	1.75	7.00	5.69	5.75	4.50	2.88	2.25	.69	2.75	9.87	—	—	11.47	—	—	6.44	7.16
721	2.06	7.75	5.94	6.38	4.69	3.19	2.34	.72	3.00	10.24	10.69	—	11.94	12.39	—	7.09	7.66
724	2.38	8.50	6.19	7.06	4.88	3.53	2.44	.75	3.25	10.88	10.88	11.32	12.58	12.58	13.45	7.69	8.19
726	2.62	9.63	6.66	8.00	5.25	4.00	2.63	.75	3.69	11.38	11.38	11.82	13.02	13.02	13.94	8.75	8.97
730	3.00	10.00	7.50	8.44	5.88	4.22	2.94	.75	4.00	11.83	11.83	14.07	13.47	13.47	16.17	9.63	10.50
732	3.25	11.19	7.66	9.50	6.13	4.75	3.06	.88	4.38	12.19	12.19	14.43	13.83	13.83	16.57	10.25	10.94
738	3.75	12.13	8.66	10.38	7.00	5.19	3.50	.94	4.81	12.69	12.69	14.93	14.34	14.34	17.71	11.38	12.09
752	5.16	16.38	10.63	14.13	8.38	7.06	4.19	1.13	6.44	—	—	—	—	—	23.43††	14.88	14.38
760	6.00	19.00	12.00	16.50	9.50	8.25	4.75	1.25	7.75	—	—	—	—	—	23.43††	17.75	16.00

Size	N	P		R-NEMA 56C 140TC	R-NEMA 180TC 210TC 250TC	T	Low Speed Shaft U +.000 -.001	V	W-Key Sq.	W-Key Length	Approx. Weight (LBS.) F700 (1)	Approx. Weight (LBS.) QC700 (1)	Base Kit No. †	Fan Kit No.**
713	4.00	5.27	—	3.31	—	11/32	.625	2.00	3/16	1	31	35	56577	—
715	4.31	5.71	—	3.31	—	13/32	.750	1.78	3/16	1	37	43	56438	—
718	4.31	6.18	—	3.31	—	13/32	.875	1.78	3/16	1	39	46	56585	—
721	4.69	6.74	7.94	3.31	—	15/32	1.000	2.09	1/4	1-1/4	48	51	56440	—
724	5.09	8.51	—	3.31	4.63	15/32	1.125	2.38	1/4	1-1/4	57	62	56591	—
726	5.63	9.19	—	3.31	4.63	17/32	1.125	2.63	1/4	1-15/16	74	75	56595	—
730	6.75	9.86	—	3.31	4.63	17/32	1.250	3.25	1/4	2-1/4	96	102	65544	—
732	7.06	10.51	—	3.31	4.63	17/32	1.375	3.25	5/16	2-7/16	118	119	56599	51450
738	7.75	11.45	—	3.31	4.63	19/32	1.625	3.50	3/8	2-1/4	156	158	56603	51451
752	9.06	14.51	—	—	4.63	25/32	2.000	4.16	1/2	2-15/16	—	292††	56607	51452
760	10.00	16.63	—	—	4.63	29/32	2.250	4.56	1/2	3-3/8	—	350††	56610	51453

* See Assemblies and Mounting Positions, Pages 107 and 108.
** For Fan Kits, see Page 130.
† For Base Kits, see Page 129.
(1) For sizes 724 and larger using HM3 add 25 lbs.
††752 & 760 SIZES AVAILABLE ONLY IN RF-FLANGED COUPLING TYPE.
Reference Page 245 for flange details.

HMF and 700 Series Double Reduction Flanged Reducer Dimensions

F700/QC700 Series Flanged Quill/Flanged Coupling Types

A Position Horizontal Base

FOR ORDERING INFORMATION, see Page 106.
FOR RATING INFORMATION, See Pages 109-118.

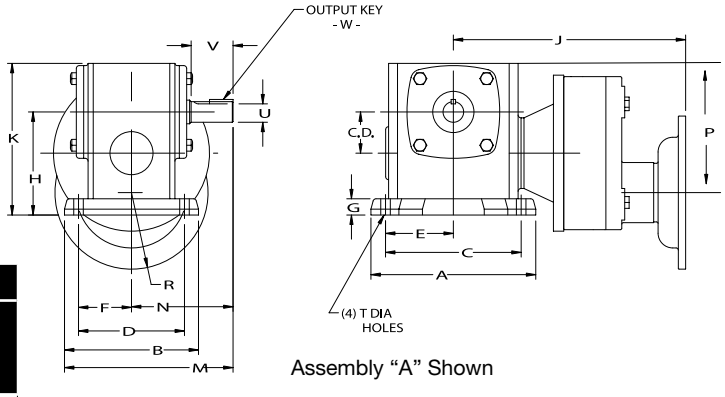

Assembly "A" Shown

ASSEMBLY TYPES*

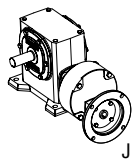

J STANDARD

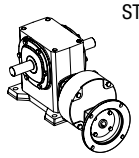

H

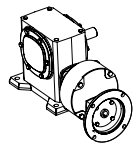

G

ALL DIMENSIONS IN INCHES

NEMA Mounting	Input	
	Bore +.0015 -.0000	Keyway
42CZ	.500	1/8 x 1/16
56C	.625	3/16 x 3/32
140TC	.875	3/16 x 3/32
180TC	1.125	1/4 x 1/8
210TC	1.375	5/16 x 5/32

ALL DIMENSIONS IN INCHES

Size	C.D.	A	B	C	D	E	F	G	H	J-NEMA Mounting						K	M
										F700			QC700				
										56C	140TC	180TC 210C	56C	140TC	180TC 210TC 250TC		
713	1.33	5.38	4.19	4.38	3.31	2.19	1.66	.53	3.47	9.12	—	—	10.65	—	—	5.19	6.09
715	1.54	6.44	5.44	5.25	4.31	2.63	2.16	.59	4.06	9.68	—	—	11.29	—	—	5.97	7.03
718	1.75	7.00	5.69	5.75	4.50	2.88	2.25	.69	4.38	9.87	—	—	11.47	—	—	6.44	7.16
721	2.06	7.75	5.94	6.37	4.69	3.19	2.34	.72	4.81	10.24	10.69	—	11.94	12.39	—	7.09	7.66
724	2.37	8.50	6.19	7.06	4.88	3.53	2.44	.75	5.19	10.88	10.88	11.32	12.58	12.58	13.45	7.69	8.19
726	2.62	9.63	6.66	8.00	5.25	4.00	2.62	.75	5.81	11.38	11.38	11.82	13.02	13.02	13.94	8.75	8.97
730	3.00	10.00	7.50	8.44	5.88	4.22	2.94	.75	6.38	11.83	11.83	14.07	13.47	13.47	16.17	9.63	10.50
732	3.25	11.19	7.66	9.50	6.12	4.75	3.06	.88	6.75	12.19	12.19	14.43	13.83	13.83	16.57	10.25	10.89
738	3.75	12.13	8.66	10.37	7.00	5.19	3.50	.94	7.50	12.69	12.69	14.93	14.34	14.34	17.71	11.38	12.09

Size	N	P		R-NEMA				T Holes	Low Speed Shaft				Approx. Weight (LBS.)		Base Kit No. †	Fan Kit No.**
				56C	140TC	180TC	210TC		U +.000 -.001	V	W-Key		F700 (1)	QC700 (1)		
											Sq.	Length				
713	4.00	4.74	—	3.31	—	—	—	11/32	.625	2.00	3/16	1	31	35	56577	—
715	4.31	5.12	—	3.31	3.31	—	—	13/32	.750	1.78	3/16	1	37	43	56438	—
718	4.31	5.49	—	3.31	3.31	—	—	13/32	.875	1.78	3/16	1	39	46	56585	—
721	4.69	6.02	7.22	3.31	3.31	—	—	15/32	1.000	2.09	1/4	1-1/4	48	51	56440	—
724	5.09	7.76	—	3.31	3.31	4.63	—	15/32	1.125	2.37	1/4	1-1/4	57	62	56591	—
726	5.62	8.44	—	3.31	3.31	4.63	—	17/32	1.125	2.62	1/4	1-15/16	74	75	56595	—
730	6.75	9.11	—	3.31	3.31	4.63	—	17/32	1.250	3.25	1/4	2-1/4	96	102	65544	—
732	7.06	9.63	—	3.31	3.31	4.63	—	17/32	1.375	3.25	5/16	2-7/16	118	119	56599	54150
738	7.75	10.51	—	—	3.31	4.63	4.63	19/32	1.625	3.50	3/8	2-1/4	156	158	56603	54151

* See Assemblies and Mounting Positions, Pages 107 and 108.
** For Fan Kits, see Page 130.
† For Base Kits, see Page 129.
(1) For sizes 724 and larger using HM3 add 25 lbs.
††752 & 760 SIZES AVAILABLE ONLY IN RF-FLANGED COUPLING TYPE.
Reference Page 245 for flange details.

C

HMF and 700 Series Double Reduction Flanged Reducer Dimensions

F700/QC700 Series Flanged Quill/Flanged Coupling Types

C/D Position Vertical Base; C/E = High Base; D/F = Low Base

FOR ORDERING INFORMATION, see Page 106.
FOR RATING INFORMATION, See Pages 109-118.

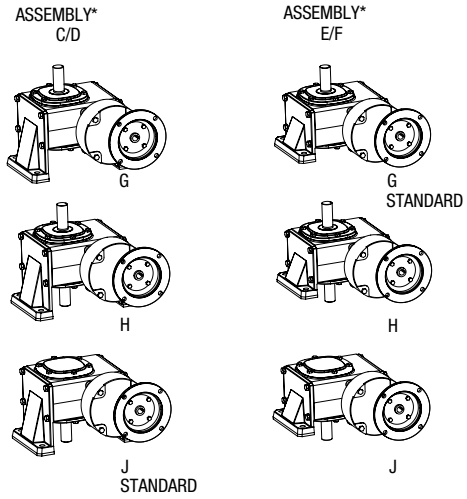

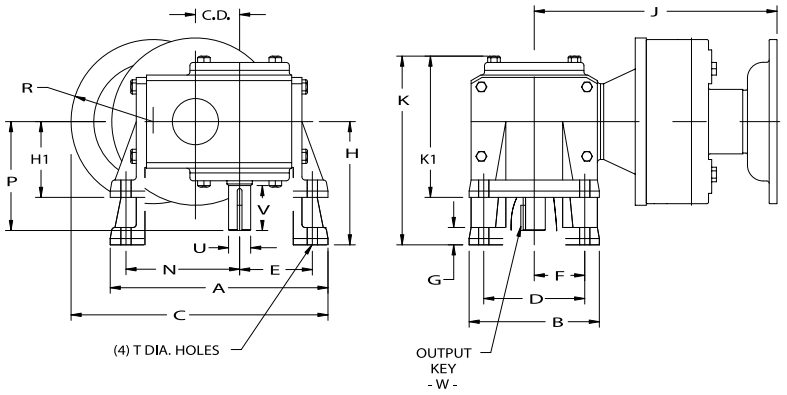

Assembly "A" Shown

ALL DIMENSIONS IN INCHES

Size	C.D.	A	B	C	D	E	F	G	H	H1	J-NEMA Mounting F700 56C	J-NEMA Mounting F700 140TC	J-NEMA Mounting F700 180TC 210C	J-NEMA Mounting QC700 56C	J-NEMA Mounting QC700 140TC	J-NEMA Mounting QC700 180TC 210TC 250TC	K	K1
713	1.33	7.09	4.13	6.16	3.25	1.78	1.63	.53	3.56	2.31	9.12	—	—	10.65	—	—	5.59	4.34
715	1.54	8.03	5.16	6.97	4.00	1.97	2.00	.69	4.38	3.00	9.68	—	—	11.29	—	—	6.91	5.53
718	1.75	8.44	5.16	7.38	4.00	2.13	2.00	.69	4.38	3.00	9.87	—	—	11.47	—	—	6.88	5.50
721	2.06	9.50	6.03	8.38	4.88	2.34	2.44	.72	4.88	3.13	10.24	10.69	—	11.94	12.39	—	7.50	5.75
724	2.38	10.06	6.31	8.94	4.88	2.56	2.44	.75	5.25	3.38	10.88	10.88	11.32	12.58	12.58	13.45	7.97	6.09
726	2.62	11.69	7.38	10.13	5.75	3.00	2.88	.88	5.59	3.63	11.38	11.38	11.82	13.02	13.02	13.94	8.50	6.53
730	3.00	12.50	8.00	11.13	6.00	3.34	3.00	.94	5.88	3.94	11.83	11.83	14.07	13.47	13.47	16.17	9.13	7.20
732	3.25	13.38	9.00	11.88	6.13	3.56	3.06	.88	6.25	4.69	12.19	12.19	14.43	13.83	13.83	16.57	10.00	8.56
738	3.75	15.69	10.00	13.94	8.00	4.00	4.00	.94	7.00	5.25	12.69	12.69	14.93	14.34	14.34	17.71	11.12	9.38
752	5.16	20.50	13.13	18.00	10.00	5.44	5.00	1.13	8.63	6.38	—	—	—	—	—	23.43††	13.38	11.13
760	6.00	23.25	14.75	20.88	11.75	6.63	5.88	1.13	9.63	7.31	—	—	—	—	—	23.43††	14.94	12.63

Size	N	P	R-NEMA Mounting 42CZ	R-NEMA Mounting 56C 140TC	R-NEMA Mounting 180TC 210TC 250TC	T Holes	Low Speed Shaft U +.000 -.001	Low Speed Shaft V	Low Speed Shaft W-Key Sq.	Low Speed Shaft W-Key Length	High Base Approx. Weight (LBS.) F	High Base Approx. Weight (LBS.) QC	High Base Base Kit No. †	Low Base Approx. Weight (LBS.) F	Low Base Approx. Weight (LBS.) QC	Low Base Base Kit No. †	Fan Kit No.**
713	3.69	4.00	—	3.31	—	11/32	.625	2.00	3/16	1	13	19	56578	30	35	56579	—
715	4.25	4.31	—	3.31	—	13/32	.750	1.78	3/16	1	22	27	56582	39	44	56583	—
718	4.50	4.31	—	3.31	—	13/32	.875	1.78	3/16	1	24	30	56582	41	47	56583	—
721	5.09	4.69	—	3.31	—	15/32	1.000	2.09	1/4	1-1/4	29	35	56588	50	52	56589	—
724	5.44	5.09	—	3.31	4.63	15/32	1.125	2.38	1/4	1-1/4	39	44	56592	63	66	56593	—
726	6.13	5.63	—	3.31	4.63	17/32	1.125	2.63	1/4	1-15/16	59	57	56596	80	81	56597	—
730	6.75	6.75	—	3.31	4.63	17/32	1.250	3.25	1/4	2-1/4	77	79	65545	98	101	65546	—
732	7.13	7.06	—	3.31	4.63	17/32	1.375	3.25	5/16	2-7/16	95	98	56600	115	119	56601	51450
738	8.31	7.75	—	3.31	4.63	19/32	1.625	3.50	3/8	2-1/4	153	147	56604	162	166	56605	51451
752	10.56	9.06	—	—	4.63	29/32	2.000	4.16	1/2	2-15/16	—	267	56608	—	305††	56609	51452
760	12.19	10.00	—	—	4.63	29/32	2.250	4.56	1/2	3-3/8	—	345	56611	—	375††	56612	51453

* See Assemblies and Mounting Positions, Pages 107 and 108.
** For Fan Kits, see Page 130.
† For Base Kits, see Page 129.
(1) For sizes 724 and larger using HM3 add 25 lbs.

††752 & 760 SIZES AVAILABLE ONLY IN RF-FLANGED COUPLING TYPE. Reference Page 245 for flange details.

HMF and 700 Series Double Reduction Flanged Reducer Dimensions

F700/QC700 Series Flanged Quill/Flanged Coupling Types

X Position Vertical Base; X = Input Vertical Up

FOR ORDERING INFORMATION, see Page 106.
FOR RATING INFORMATION, See Pages 109-118.

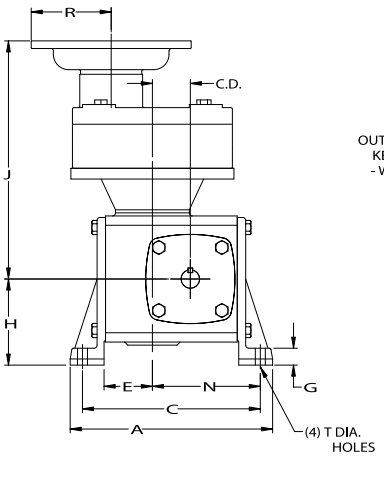

Assembly "A" Shown

ASSEMBLY TYPES*

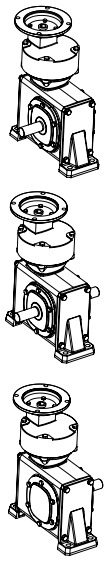

ALL DIMENSIONS IN INCHES

Size	C.D.	A	B	C	D	E	F	G	H	J-NEMA MOUNTING F700 56C 140TC	J-NEMA MOUNTING F700 180TC 210C	J-NEMA MOUNTING QC700 56C 140TC	J-NEMA MOUNTING QC700 180TC 210C	K	N
713	1.33	7.28	2.91	6.41	2.00	1.70	1.00	0.53	2.94	9.12	—	10.65	—	6.03	3.92
715	1.54	8.25	3.72	7.25	2.50	2.00	1.25	0.69	3.50	9.68	—	11.29	—	6.84	4.37
718	1.75	8.62	3.72	7.63	2.50	2.00	1.25	0.69	3.50	9.87	—	11.47	—	6.81	4.75
721	2.06	9.75	3.84	8.63	2.63	2.09	1.31	0.72	3.94	10.24 10.69	—	11.94 12.39	—	7.28	5.47
724	2.37	10.31	4.13	9.19	2.88	2.13	1.44	0.75	4.06	10.88	11.32	12.58	13.45	7.81	6.00
726	2.62	11.88	4.53	10.38	3.13	2.50	1.56	0.88	4.75	11.38	11.82	13.02	13.94	8.53	6.75

Size	P	R-NEMA Mounting 56C 140TC	R-NEMA Mounting 180TC 210C	T Holes	Low Speed Shaft U +.001 -.000	Low Speed Shaft V	Low Speed Shaft W-Key Sq.	Low Speed Shaft W-Key Length	Approximate Weight (LBS.) (1) F	Approximate Weight (LBS.) (1) QC	Base Kit No. †
713	4.00	3.31	—	11/32	.625	2.00	3/16	1	31	31	55196
715	4.31	3.31	—	13/32	.750	1.78	3/16	1	39	42	55349
718	4.30	3.31	—	13/32	.875	1.78	3/16	1	40	45	55349
721	4.69	3.31	—	15/32	1.000	2.09	1/4	1-1/4	50	52	55644
724	5.09	3.31	4.63	15/32	1.125	2.38	1/4	1-1/4	59	59	55678
726	5.63	3.31	4.63	17/32	1.125	2.63	1/4	1-1/4	76	77	55769

* Assemblies define output (slow speed) shaft projection with respect to input (high speed) shaft and mounted surfaces. Input may be rotated clockwise or counterclockwise. See Assemblies and Mounting Positions, Pages 107 and 108.

† For Base Kits, see Page 129.

(1) For sizes 724 and larger using HM3 add 25 lbs. Reference Page 245 for flange details.

C

HMF and 700 Series Double Reduction Flanged Reducer Dimensions

HF700/HQC700 Series Flanged Quill/Flanged Coupling Types

Basic Models (No Base); Bored to Size Hollow Output Shaft

FOR ORDERING INFORMATION, see Page 106.
FOR RATING INFORMATION, See Pages 109-118.

ASSEMBLY TYPES*

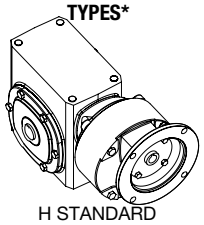

H STANDARD

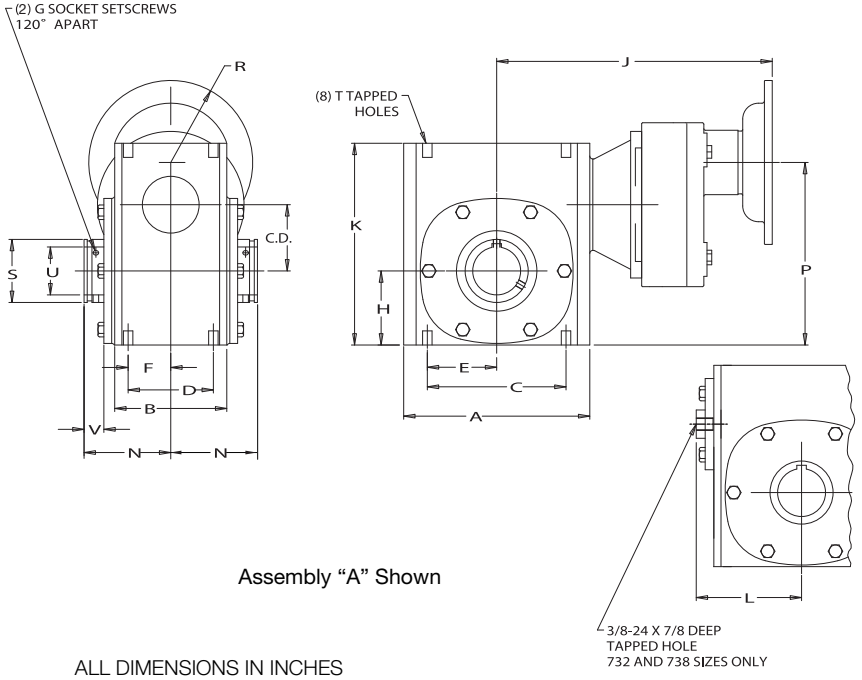

Assembly "A" Shown

ALL DIMENSIONS IN INCHES

Size	C.D.	A	B	C	D	E	F	G	H	J-NEMA Mounting HF700 56C 140TC	J-NEMA Mounting HF700 180TC 210C	J-NEMA Mounting HF700 250TC	J-NEMA Mounting HQC700 56C 140TC	J-NEMA Mounting HQC700 180TC 210C	J-NEMA Mounting HQC700 250TC	K	L	N
713	1.33	4.25	2.88	3.25	2.00	1.63	1.00	#10-32	1.72	9.12	—	—	10.65	—	—	4.66	—	2.50
715	1.54	5.13	3.69	4.19	2.75	2.09	1.38	#10-32	1.91	9.68	—	—	11.29	—	—	5.38	—	3.03
718	1.75	5.50	3.69	4.19	2.75	2.09	1.38	#10-32	2.06	9.87	—	—	11.47	—	—	5.75	—	3.03
721	2.06	6.00	3.81	5.00	2.88	2.50	1.44	1/4-28	2.28	10.24 10.69	—	—	11.94 12.39	—	—	6.38	—	3.22
724	2.38	6.38	4.06	5.00	2.88	2.50	1.44	1/4-28	2.50	10.88	11.32	—	12.58	13.45	—	6.94	—	3.22
726	2.62	7.38	4.44	6.38	3.38	3.19	1.69	5/16-24	2.94	11.38	11.82	—	13.02	13.94	—	8.00	—	3.44
730	3.00	8.12	5.25	7.00	4.00	3.50	2.00	5/16-24	3.25	11.83	14.07	—	13.47	16.17	—	8.88	—	4.19
732	3.25	9.00	5.88	7.50	4.00	3.75	2.00	5/16-24	3.50	12.19	14.43	—	13.83	16.57	—	9.38	4.94	4.31
738	3.75	10.00	6.38	8.50	4.75	4.25	2.38	3/8-24	3.88	12.69	14.93	—	14.34	17.71	—	10.44	5.50	4.81
752	5.16	13.13	7.38	11.0	5.81	5.50	2.91	3/8-24	5.31	—	22.44	22.44	—	22.44	22.44	13.75	7.19	6.12

Size	P		R-NEMA Mounting 56C 140TC	R-NEMA Mounting 180TC 210TC	R-NEMA Mounting 250TC	S	T Tap Size	T Depth	Low Speed Shaft Max U +.0015 -.0000	Low Speed Shaft V	Low Speed Shaft W-Key Sq.	Low Speed Shaft W-Key Length	Approx. Weight (LBS.) (1) HF	Approx. Weight (LBS.) (1) HQC	Fan Kit No.**
713	4.74	—	3.31	—		.88	5/16-18	.50	.625	.68	3/16 x 1/8	1	25	27	—
715	5.12	—	3.31	—		1.38	5/16-18	.50	1.000	.84	1/4 x 7/32	1-3/8	39	41	—
718	5.49	—	3.31	—		1.38	5/16-18	.50	1.000	.74	1/4 x 7/32	1-3/8	41	42	—
721	6.02	7.22	3.31	—		2.00	3/8-16	.56	1.4375	.87	3/8 x 5/16	1-3/4	46	47	—
724	7.76	—	3.31	4.63		2.00	3/8-16	.56	1.4375	.75	3/8 x 5/16	1-3/4	61	65	—
726	8.44	—	3.31	4.63		2.50	3/8-16	.56	1.9375	.78	1/2 x 3/8	2	74	75	—
730	9.11	—	3.31	4.63		2.88	7/16-14	.88	2.1875	1.10	1/2 x 3/8	2	95	99	—
732	9.63	—	3.31	4.63		2.88	7/16-14	.66	2.1875	.93	1/2 x 3/8	2	115	127	51450
738	10.51	—	3.31	4.63		3.25	1/2-13	.75	2.4375	1.11	5/8 x 3/8	2-1/2	155	166	51451
752	13.38	—	—	4.63	4.63	4.25	5/8-11	1.00	3.4375	1.37	See Chart on page 128		221		51457

* See Assemblies and Mounting Positions, Pages 107 and 108.
** For Fan Kits, see Page 130.

(1) For sizes 724 and larger using HM3 add 25 lbs.
Input may be rotated clockwise or counterclockwise.
See Page 128 for available bore sizes.
Reference Page 245 for flange details.

HMF and 700 Series Double Reduction Flanged Reducer Dimensions

HF700/HQC700 Series Flanged Quill/Flanged Coupling Types

R/L Position Mounting Bracket; Bored to Size Hollow Output Shaft

FOR ORDERING INFORMATION, see Page 106.
FOR RATING INFORMATION, See Pages 109-118.

R Position

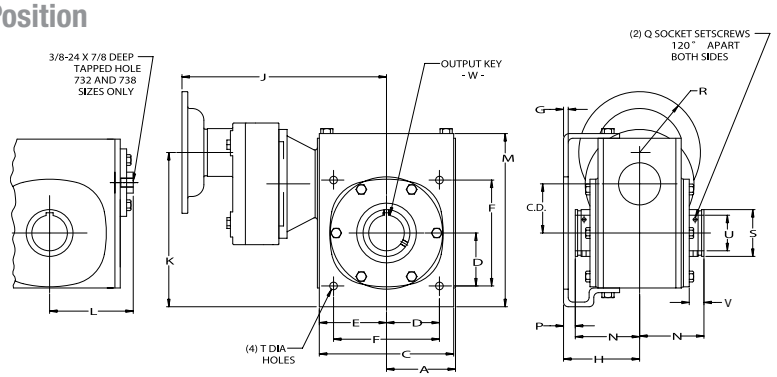

ASSEMBLY TYPES*

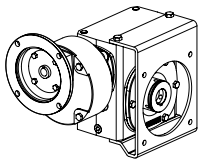

L Position

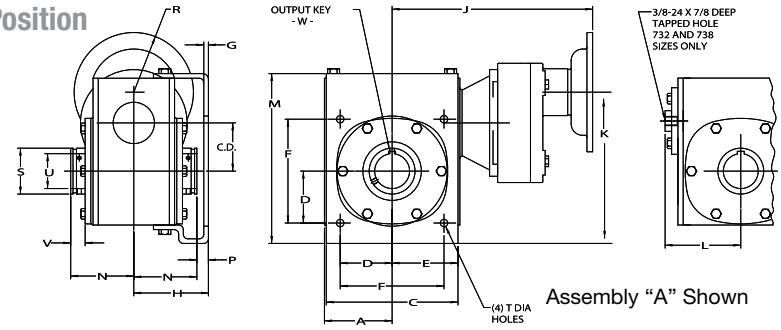

Assembly "A" Shown

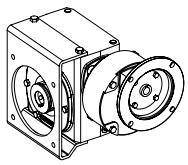

ALL DIMENSIONS IN INCHES

Size	C.D.	A	B	C	D	E	F	G	H	J-NEMA Mounting HF700 56C 140TC	J-NEMA Mounting HF700 180TC 210C	J-NEMA Mounting HQC700 56C 140TC	J-NEMA Mounting HQC700 180TC 210C	K	L
713	1.33	2.12	3.62	4.25	1.77	2.12	3.54	.19	3.00	9.12	—	10.65	—	5.34	—
715	1.54	2.56	3.62	4.75	1.77	2.38	3.54	.19	3.56	9.68	—	11.29	—	5.75	—
718	1.75	2.75	4.06	4.81	2.08	2.41	4.16	.19	3.50	9.87	—	11.47	—	6.25	—
721	2.06	3.00	4.50	5.75	2.30	2.88	4.60	.19	3.75	10.24 10.69	—	11.94 12.39	—	6.86 8.06	—
724	2.38	3.19	5.00	5.75	2.65	2.88	5.30	.25	3.72	10.88	11.32	12.58	13.45	8.86	—
726	2.62	3.69	6.00	7.18	2.83	3.59	5.66	.25	4.06	11.38	11.82	13.02	13.94	9.44	—
730	3.00	4.06	7.00	8.00	3.18	4.00	6.36	.25	4.50	11.83	14.07	13.47	16.17	10.39	—
732	3.25	4.50	7.00	8.50	3.54	4.25	7.08	.25	5.25	12.19	14.43	13.83	16.57	10.88	4.94
738	3.75	5.00	8.00	9.50	4.06	4.75	8.12	.25	5.47	12.69	14.93	14.34	17.71	33.78	5.50

Size	M	N	P	Q	R-NEMA Mounting 56C 140TC	R-NEMA Mounting 180TC 210TC	S	T Holes	Low Speed Shaft Max U +.0015 -.0000	V	W-Key Size.	W-Key Length	Approx. Weight (LBS.) (1) HF	Approx. Weight (LBS.) (1) HQC	Fan Kit No.**
713	5.55	2.50	.50	#10-32	3.31	—	.88	11/32	.625	.68	3/16x1/8	1	34	39	—
715	6.16	3.03	.44	#10-32	3.31	—	1.38	11/32	1.000	.84	1/4x7/32	1-3/8	40	46	—
718	6.66	3.03	.47	#10-32	3.31	—	1.38	11/32	1.000	.74	1/4x7/32	1-3/8	47	49	—
721	7.47	3.22	.53	1/4-28	3.31	—	1.94	13/32	1.4375	.87	3/8x5/16	1-3/4	58	59	—
724	8.30	3.22	.50	1/4-28	3.31	4.63	1.94	13/32	1.4375	.75	3/8x5/16	1-3/4	66	72	—
726	9.25	3.44	.62	5/16-24	3.31	4.63	2.50	13/32	1.9375	.78	1/2x3/8	2	77	78	—
730	10.38	4.19	.31	5/16-24	3.31	4.63	2.88	13/32	2.1875	1.12	1/2x3/8	2	101	105	—
732	10.91	4.31	.94	5/16-24	3.31	4.63	2.88	9/16	2.1875	.93	1/2x3/8	2	120	132	51450
738	11.84	4.81	.66	3/8-24	3.31	4.63	3.25	9/16	2.4375	1.11	5/8x3/8	2-1/2	172	175	51451

* See Assemblies and Mounting Positions, Pages 107 and 108.
** For Fan Kits, see Page 130.
(1) For sizes 724 and larger using HM3 add 25 lbs.
Input may be rotated clockwise or counterclockwise.

See Page 128 for available bore sizes.
Reference Page 245 for flange details.

C

F700 NEMA C Quill Type

Motor Flange Data

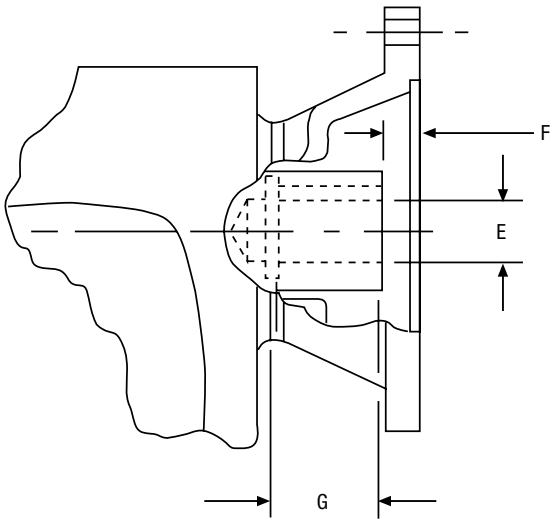

ALL DIMENSIONS IN INCHES

SIZE	BORE CODE	E	F	G
710	B4 B5	1/2 5/8	3/8 9/32	1-3/32 1-5/16
713	B5	5/8	23/32	1-5/16
715	B5 B7	5/8 7/8	21/32 7/16	1-5/8 1-3/4
718	B5 B7	5/8 7/8	21/32 17/32	1-5/8 1-3/4
721	B5 B7	5/8 7/8	5/8 13/16	1-5/8 1-3/4
724	B5 B7 B9	5/8 7/8 1-1/8	11/16 11/16 7/16	1-5/8 1-3/4 2-7/16
726	B5 B7 B9	5/8 7/8 1-1/8	5/8 21/32 5/8	1-5/8 1-3/4 2-3/8
730	B5 B7 B9	5/8 7/8 1-1/8	5/8 5/8 11/16	1-11/32 1-11/32 2-11/16
732	B5 B7 B9	5/8 7/8 1-1/8	23/32 23/32 29/32	1-5/8 1-3/4 2-3/8
738	B7 B9 B11	7/8 1-1/8 1-3/8	19/32 5/16 3/4	1-3/4 2-1/8 2-7/8

C

Cast Iron Output Bearing Carrier Data

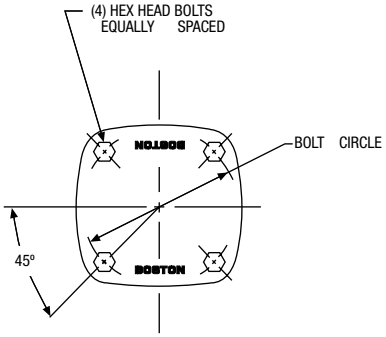

710 THRU 724 SIZE
4 BOLT PATTERN

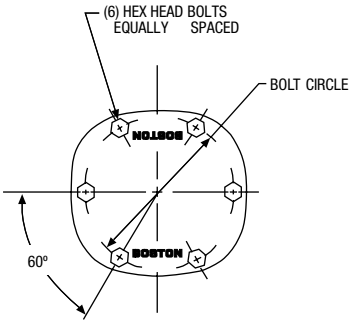

726 THRU 760 SIZE
6 BOLT PATTERN

ALL DIMENSIONS IN INCHES

SIZE	BOLT		
	CIRCLE DIA.	SIZE	LENGTH
710	2-3/8	10-32	1/2
713	3	1/4-20	5/8
715	3-5/8	5/16-18	3/4
718	4	5/16-18	3/4
721	4-3/8	5/16-18	3/4
724	4-15/16	5/16-18	3/4
726	5-3/8	5/16-18	3/4
730	6	5/16-18	3/4
732	6-9/16	5/16-18	3/4
738	7-5/8	3/8-16	7/8
752	10-3/8	7/16-14	1-1/4
760	12-1/16	1/2-13	1-1/4

Input Bearing Retainer Data

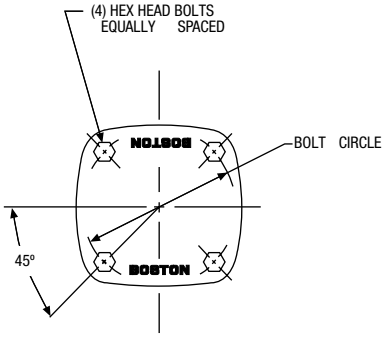

710 THRU 760 SIZE
4 BOLT PATTERN

ALL DIMENSIONS IN INCHES

SIZE	BOLT		
	CIRCLE DIA.	SIZE	LENGTH
710	1-5/8	10-32	1/2
713	2	1/4-20	5/8
715	2-5/8	5/16-18	3/4
718	2-5/8	5/16-18	3/4
721	3	5/16-18	3/4
724	3	5/16-18	3/4
726	3-7/16	5/16-18	3/4
730	3-7/16	5/16-18	3/4
732	3-7/16	5/16-18	3/4
738	3-7/16	5/16-18	3/4
752	4-3/8	7/16-14	1-1/4
760	4-3/8	7/16-14	1-1/4

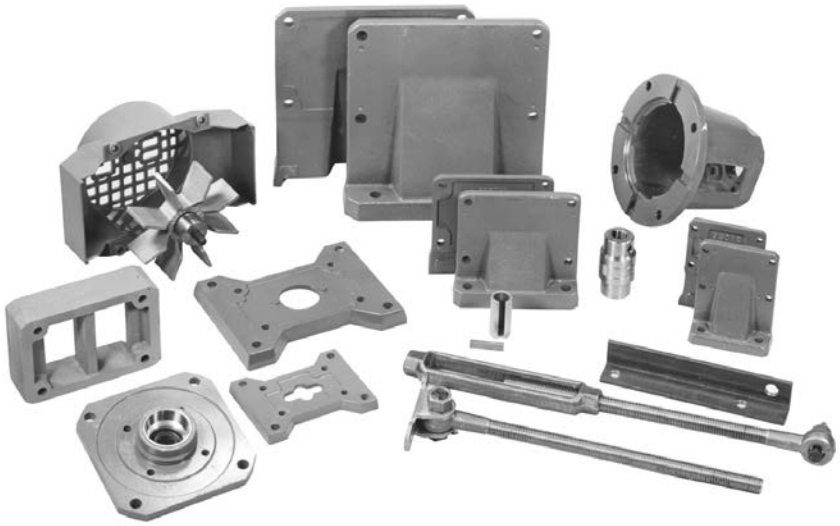

Section Contents

Output Bracket 128

Reaction Rods 128

Bases 129

Posivent® 129

Fan Kits 130

Riser Block Kit 130

Bushing 130

CFA Hardware Kit 130

RF C-Face Flange Kit 131

Bost-Kleen & Washdown Duty 132

D

H Series Hollow Output Bore Sizes														
		Unit Size												
Fraction Size	Output Bore Code	713	SS713	715	718	721	724	726	730	732	738	752	Decimal Size*	Key Size†
5/8	P10	•	•										.6250	3/16 x 1/8 x 1"
3/4	P12		•	•	•	•	•						.7500	3/16 x 5/32 x 1"
7/8	P14		•	•	•	•	•						.8750	3/16 x 5/32 x 1"
15/16	P15		•	•	•	•	•	•					.9375	1/4 x 7/32 x 1-3/8"
1	P16		•	•	•	•	•	•					1.0000	1/4 x 7/32 x 1-3/8"
1 1/16	P17					•	•	•					1.0625	1/4 x 7/32 x 1-3/8"
1 1/8	P18					•	•	•					1.1250	1/4 x 7/32 x 1-3/8"
1 3/16	P19					•	•	•	•	•			1.1875	1/4 x 7/32 x 1-3/8"
1 1/4	P20					•	•	•	•	•			1.2500	1/4 x 7/32 x 1-3/8"
1 5/16	P21					•	•	•	•	•			1.3125	5/16 x 1/4 x 1-5/8"
1 3/8	P22							•	•	•	•	•	1.3750	5/16 x 1/4 x 1-5/8"
1 7/16	P23					•	•	•	•	•	•	•	1.4375	3/8 x 5/16 x 1-3/4"
1 1/2	P24							•	•	•	•	•	1.5000	3/8 x 5/16 x 1-3/4"
1 5/8	P26							•	•	•	•	•	1.6250	3/8 x 5/16 x 1-3/4"
1 11/16	P27							•	•	•	•	•	1.6875	3/8 x 5/16 x 1-3/4"
1 3/4	P28							•	•	•	•	•	1.7500	3/8 x 5/16 x 1-3/4"
1 7/8	P30								•	•	•	•	1.8750	1/2 x 3/8 x 2"
1 15/16	P31							•	•	•	•	•	1.9375	1/2 x 3/8 x 2"
2	P32								•	•	•	•	2.0000	1/2 x 3/8 x 2"
2 1/8	P34										•	•	2.1250	1/2 x 3/8 x 2"
2 3/16	P35								•	•	•	•	2.1875	1/2 x 3/8 x 2"
2 1/4	P36										•	•	2.2500	1/2 x 3/8 x 2"
2 7/16	P39										•	•	2.4375	5/8 x 1/2 x 2-1/2"
3 7/16	P55											•	3.4375	7/8 x 5/8 x 3"

* Bore Tolerance +.0015 – .0000
• Available bore sizes
† Key is provided with reducer to fit hollow shaft. Driven shaft requires standard width and depth keyway.
Also available in stainless steel.

D

Output Bracket (Including Fasteners)

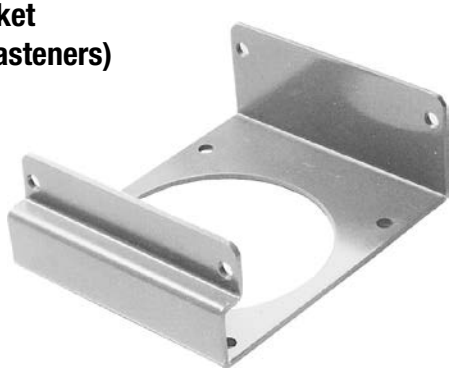

ORDER BY CATALOG OR KIT NUMBER

Size	Catalog Number	Kit Number
713	XH713-11RLK	13977
715	XH715-11RLK	13978
718	XH718-11RLK	13979
721	XH721-11RLK	13980
724	XH724-11RLK	13981
726	XH726-11RLK	13982
730	XH730-11RLK	65547
732	XH732-11RLK	13983
738	XH738-11RLK	13984

Reaction Rod Kits

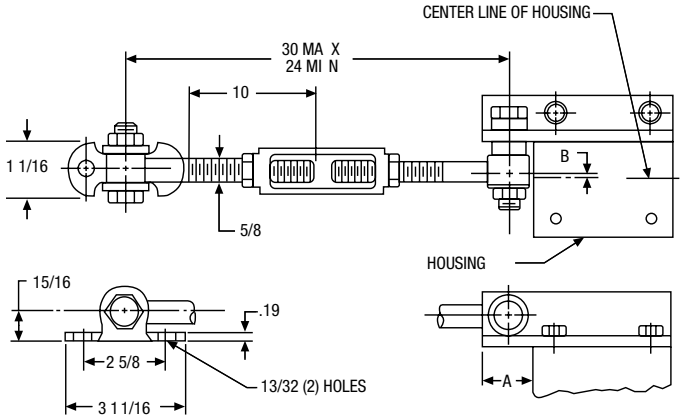

Accessory kits are shipped separately, unless otherwise specified.
ORDER BY CATALOG OR KIT NUMBER

Size	Dimensions A	Dimensions B	Catalog Number	Kit Number
713	1.31	.26	XH713-76K	13973
715	1.18	.12	XH715-76K	13974
718	1.09	.09	X718-76K	69692
721	1.25	.03	X721-76K	69693
724	1.00	.03	X721-76K	69693
726	1.25	.22	X726-76K	69694
730	2.10	.52	X732-76K	69695
732	1.50	.53	X732-76K	69695
738	1.41	.91	XH738-76K	13976

Complete kit includes all hardware shown, angle bracket and cap screws.

Dimensions of bases assembled on units are shown on applicable reducer dimension pages.
Accessory kits are shipped separately, unless otherwise specified.

Cast Iron Base Kits (Including Fasteners) For Horizontal Positions A & B

ORDER BY KIT NUMBER

Size	Cast Iron Kit Number
710A,B	87874
713A,B	56437
715A,B	56438
718A,B	56439
721A,B	56440
724A,B	56441
726A,B	56442
730A,B	65544
732A,B	56599
738A,B	56603
752A,B	56607
760A,B	56610

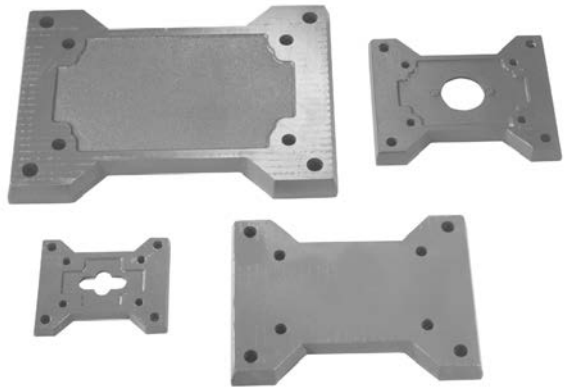

Cast Iron Base Kits (Including Fasteners) For Vertical Positions C, D, E & F

ORDER BY KIT NUMBER

SIZE	KIT NUMBER	SIZE	KIT NUMBER
710C	56576	**724X/Y**	55678
713D	56579	**726D**	56597
713C	56578	**726C**	56596
713X/Y	55196	**726X/Y**	55769
715D	56583	**730D**	65546
715C	56582	**730C**	65545
715X/Y	55349	**732D**	56601
718D	56583	**732C**	56600
718C	56582	**738D**	56605
718X/Y	55349	**738C**	56604
721D	56589	**752D**	56609
721C	56588	**752C**	56608
721X/Y	55644	**760D**	56612
724D	56593	**760C**	56611
724C	56592		

710 available High Base only.

Type “C” and “E” are High Base.
Type “D” and “F” are Low Base.
Type “X” and “Y” are Input Vertical.

For E Base order C Base.
For F Base order D Base.



Speed Reducers With PosiVent® Option

The Boston Gear PosiVent option is available in all current 700 series styles and configurations. This specially-designed internal pressure equalization system allows the gearbox to operate in all environments without the use of conventional pressure vents. Unlike competitive versions, our unique single seam design allows for easy installation and extended life. This means longer trouble-free operation with virtually no maintenance.

USDA approved washdown finishes available in Bost-Kleen™ and Stainless Bost-Kleen™

The PosiVent option is ideal for material handling, food processing, medical and pharmaceutical applications.

To order specify the letter “Z” for the vent option, in the 700 series catalog number.

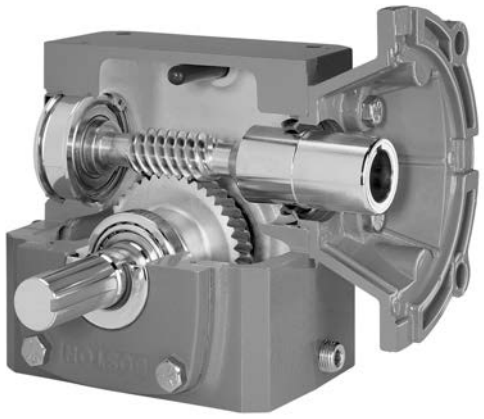

D

Accessory kits are shipped separately, unless otherwise specified.

Fan Kits

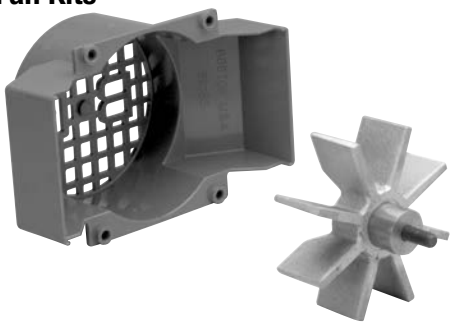

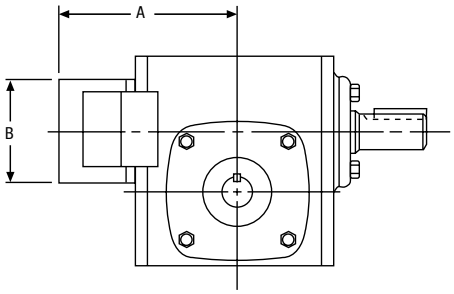

ALL DIMENSIONS IN INCHES
ORDER BY KIT NUMBER

Size	Kit Number	A	B
732	51450	7.60	4.87
738	51451	8.09	5.19
752	51452	10.87	6.25
760	51453	11.56	7.50

Riser Block Kit

Riser blocks permit the speed reducer to be mounted in the most desirable position, i.e. high speed input shaft above the oil level. The riser blocks allow clearance over the motor without inverting the speed reducer. They are ideal for mounting on inclined conveyors for frame clearance. The kit includes Riser Block and attachment bolts. Horizontal Base must be ordered separately.

Dimensions of kits assembled on units are shown on Page 37.



ORDER BY KIT NUMBER

Size	C.D.	Kit Number	Motor Frame
710	1.00	51434	42CZ
		51513	56C
713	1.33	51435	56C
715	1.54	51436	56C
			140TC
718	1.75	51437	56C
			140TC
721	2.06	51438	56C
			140TC
724	2.38	51439	56C
			140TC
		51514	180TC
726	2.62	51440	56C
			140TC
		51515	180TC
730	3.00	65542	56C/140TC
		65548	180TC
732	3.25	51441	56C
			140TC
		51516	180TC

D

7/8 x 5/8 Input Bushing & Key Kit

Convenient for reducing input quill of a flanged reducer from 7/8” bore to 5/8” bore.



ORDER BY KIT NUMBER

DESCRIPTION	KIT NUMBER
7/8 X 5/8 Bushing & Key	18958

Not Recommended for Shock Loads or Reversing Applications

CFA Hardware Kits

These end caps are ideally suited to cover the non-working shaft end of the Boston hollow shaft worm gear speed reducers. (And in particular, the HF700 M/N CFA models.)

ORDER BY KIT NUMBER

DESCRIPTION	KIT NUMBER	CATALOG NUMBER
718 CFA Hardware Kit	87406	XH718-CFA-Kit
721 CFA Hardware Kit	87408	XH721-CFA-Kit
724 CFA Hardware Kit	87415	XH724-CFA-Kit
726 CFA Hardware Kit	87422	XH726-CFA-Kit



Accessory kits are shipped separately, unless otherwise specified.

ORDER BY KIT NUMBER

Reduction		NEMA	Flange					
Single	Double	Frame	Kit No.*	A	B	C	D	J
710	**W713** **W718**	42CZ 56C	52966 52967	3/8	1-3/16 1-1/8	13/16	1-7/8 2-27/32	4.76 5.72
713	**W721** **W726**	56C 140TC	52968 52970	1/2	1-7/8	1-5/16	2-11/16	6.59
715		56C 140TC	52969 52970	5/8	1-7/8	1-9/16	2-21/32	7.34 7.34
718	**W730** **W732**	56C 140TC	52969 52970	5/8	1-7/8	1-9/16	2-21/32	7.53 7.53
721	**W738**	56C 140TC	52971 52972	5/8	2	1-9/16	3-3/16	8.31 8.31
724		56C 140TC 180TC	52973 52974 52964	3/4	2	2	2-3/4 2-3/4 4-3/16	8.50 8.50 9.94
726	**W752**	56C 140TC 180TC	52976 52977 52975	3/4	2-7/16 2-7/16 3-3/8	2	3-5/32 3-5/32 4-1/8	9.47 9.47 10.44
730		56C 140TC 180TC	52976 52977 52975	3/4	2-7/16 2-7/16 3-3/8	2	3-5/32 3-5/32 4-1/8	9.92 9.92 10.88
732	**W760**	56C 140TC 180TC	52978 52979 52980	7/8	2-7/16 2-7/16 3-3/8	2-11/32	2-27/32 2-27/32 3-13/16	10.28 10.28 11.25
738		140TC 180TC 210TC	52981 52982 52983	1	2-11/16 2-7/16 2-7/16	2-3/4	2-15/16 4-1/2 4-1/2	11.81 11.81 12.88
752		180TC 210TC 250TC	52984 52985 52986	1-1/4	3-3/8	3-1/4	5-5/16	16.00 16.00 16.00
760		210TC 250TC	52987 52988	1-1/2	3-3/8	3-7/8	4-15/16	16.69 16.69

* Includes FC coupling kit.

RF700 NEMA C-Face Flange Kits

Flange is designed specifically to adapt Boston 700 Series speed reducers to a standard NEMA C-Face mounted motor. Flanges are offered in kit form and should be ordered in addition to the worm gear speed reducer size and specific ratio. Refer to pages 16-33 for ordering and rating information. The kit includes flange, Boston FC type three jaw coupling, polyurethane insert and all mounting hardware. See RF models for dimensions.



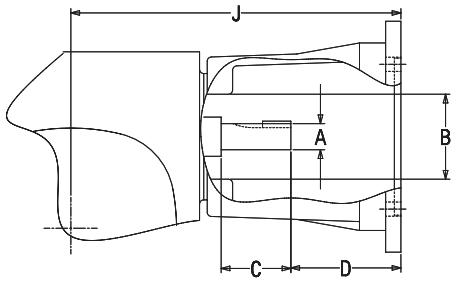

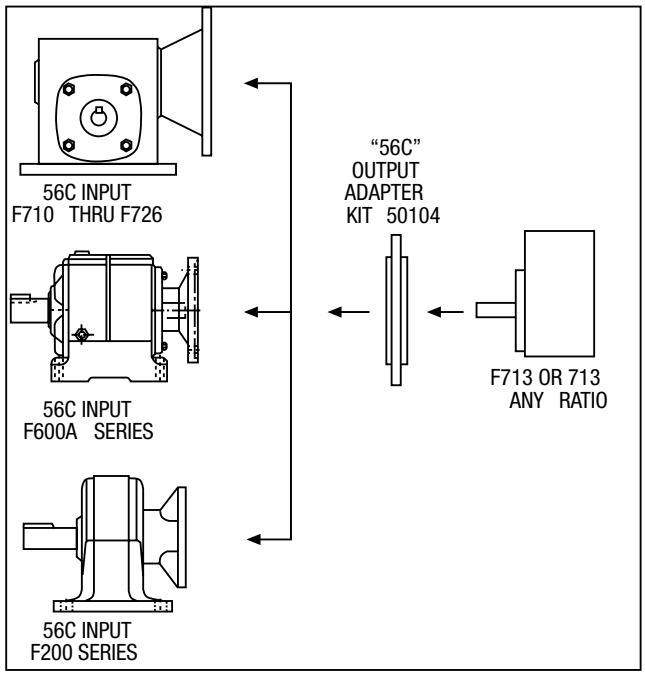

713 "56C" Face Output Adapter kit

Capable of adapting any F713 or 713 Speed Reducer to a suitable size Worm, Helical or Planetary Drive to obtain a Multiple Reduction Gear Drive.

Ideally suited to make Multi-reduction gear reducers from stock 56C input flanged reducers.

Simply order Kit No. 50104. The kit contains all appropriate hardware and instructions for easy use.

- Overall Output Ratings Should Not Exceed Gear Capacity for Required Output RPM.
- Refer To Rating Tables And Interpolate As Required To Obtain Appropriate H.P. And Torque.

D

700 Series Worm Gear Bost-Kleen Speed Reducers Washdown Duty



Boston Gear's Bost-Kleen and Stainless Bost-Kleen reducers assure contamination-safe operation in the most stringent environmental conditions.

White Bost-Kleen™

- Washable and Scrubbable
- Corrosion Resistant
- Durable White Epoxy Finish
- Boston Gear's Proven 700 Series Quality
- Limited Lifetime Warranty
- Cast Iron Housing
- Plated Pressure Relief Valves Standard
- Double Lipped Oil Seals
- Available from Stock up to 25 HP in 1" to 6" Center Distances

Available options on BK and SBK

- Stainless Steel Output Shafts
- Premounted Stainless Washdown Motors
- Prelubrication from the factory see page 16 for a complete list of lubrication options
- Exposed hardware made of stainless steel.

BISSC Certified Units

- Includes all the standard Bost-Kleen features
- Single reduction quill style units
- Available in BK or SBK
- Pre-lubricated standard with Klubersynth UH1 6-460 synthetic oil when ordered with "K" in the catalog description
- Durable, non-absorbent, non-toxic white epoxy finish
- Smooth flat machined surfaces to resist dirt build-up. Bolt heads and nuts are exposed so contaminants can easily be removed to simplify washdown.
- Solid projecting output shafts
  (BISSC—The Baking Industry Sanitation Standards Committee)

Stainless Bost-Kleen™

- Includes all the features of the standard white Bost-Kleen reducers
- U.S.D.A. approved for use in food processing and handling industry where incidental food contact may occur
- Excluder seal on solid output shaft units
- Durable stainless steel epoxy coating system utilizes a unique #316L stainless steel leafing pigment. This catalyzed system creates a hard, non-toxic metallic finish



D

BISSC CERTIFIED Basic Model Numbers, Dimensions and Available Ratios								
WHITE BOST-KLEEN		STAINLESS BOST-KLEEN						
Non-Flanged Type	Quill Type	Non-Flanged Type	Quill Typed	Center Distance	NEMA Mounting*	Input Shaft Dia.** +.000 -.001	Output Shaft Dia. +.000 -.001	Available Ratios
BK710†	BKF710†	SBK710†	SBKF710†	1.00	56C	.3745	.500	5, 10, 15, 20, 30, 40, 50, 60
BK713	BKF713	SBK713	SBKF713	1.33	56C	.4995	.625	5, 10, 15, 20, 25, 30, 40, 50, 60
BK715	BKF715	SBK715	SBKF715	1.54	56C, 140TC	.6245	.750	5, 10, 15, 20, 25, 30, 40, 50, 60
BK718	BKF718	SBK718	SBKF718	1.75	56C, 140TC	.6245	.875	5, 10, 15, 20, 25, 30, 40, 50, 60
BK721	BKF721	SBK721	SBKF721	2.06	56C, 140TC	.6245	1.000	5, 10, 15, 20, 25, 30, 40, 50, 60
BK724	BKF724	SBK724	SBKF724	2.38	56C, 140TC, 180TC	.7495	1.125	5, 10, 15, 20, 25, 30, 40, 50, 60
BK726	BKF726	SBK726	SBKF726	2.62	56C, 140TC, 180TC	.7495	1.125	5, 10, 15, 20, 25, 30, 40, 50, 60
BK730	BKF730	SBK730	SBKF730	3.00	56C, 140TC, 180TC	.8745	1.250	5, 10, 15, 20, 25, 30, 40, 50, 60
BK732	BKF732	SBK732	SBKF732	3.25	56C, 140TC	.8745	1.375	10, 15, 20, 25, 30, 40, 50, 60
BK738	BKF738	SBK738	SBKF738	3.75	140TC, 180TC, 210TC	.9995	1.625	10, 15, 20, 30, 40, 50, 60
BK752	—	SBK752	—	5.16	—	1.2495	2.000	10, 15, 20, 30, 40, 50, 60
BK760	—	SBK760	—	6.00	—	1.4995	2.250	10, 15, 20, 30, 40, 50, 60

* For BKF700 and SBKF700 Series Quill Type.
** For BK700 and SBK700 Series Reductor Type.
† Cast Iron Base Not Available.

See Pages 16 (Single reduction) and 56 (double reduction), add prefix "BK" (Bost-Kleen) or SBK (Stainless Bost-Kleen) to style type.
All other ordering information remains the same.

Installation, Lubrication, Operation Instructions and Parts



Section Contents

General Instructions 133

Lubrication Instructions 135

Oil Capacities 135

Recommended Lubricants 135

Lubricant interchange 135

Single Reduction Parts List 136-137

Double Reduction Parts List 138-139

Lifetime Warranty 140

⚠ **California Proposition 65 Warning: The Bronze gear and wear debris found inside any worm gearbox contains lead, a chemical known to the state of California to cause cancer, birth defects or other reproductive harm.**

General Instructions

1. Align all shafts accurately. Improper alignment can result in failure. Use of flexible couplings is recommended to compensate for slight misalignment.

2. When mounting, use maximum possible bolt size and secure reducer to a rigid foundation. Periodic inspection of all bolts is recommended.

3. Auxiliary drive components (such as sprockets, gears and pulleys) should be mounted on the shafts as close as possible to the housing to minimize effects of overhung loads. Avoid force fits that might damage bearings or gears.

4. For hollow-shaft speed reducers, place speed reducer as close as possible to supporting bearing on drive shaft. Spot-drill driven shaft for setscrews in severe applications. See kit instructions for reaction rod assembly.

5. Check and record gear backlash at installation and again at regular intervals. This should be done by measuring the rotary movement of the output shaft (rotating alternately clockwise and counterclockwise) at a suitable radius while holding the input shaft stationary. Gears should be replaced when the backlash exceeds four times the measurement taken at installation.

6. Gear drives are rated for 1750 input RPM and Class Service (Service Factor 1.0), using Klubersynth UH1 6-460 synthetic lubricant. For lower input speeds or for different service classes or lubricants, see catalog selection pages for rating information.

7. Initial operating temperatures may be higher than normal during the break-in period of the gear set. FOR MAXIMUM LIFE, DO NOT ALLOW THE SPEED REDUCER TO OPERATE CONTINUOUSLY ABOVE 225°F AT THE GEAR CASE. In the event of overheating, check for overloads or high ambient temperatures. Keep shafts and vent plugs clean to prevent foreign particles from entering seals or gear housing.

8. All reducers should be checked to see if they have been lubricated. Prelubed 700 Series reducers will have a solid plug in the vent hole which must be replaced by the vent plug at time of installation.

NOTE

- Vented oil filler plug must be located in the uppermost position.
- For all mounting positions where the vented filler plug is located in a horizontal plane, the vent hole must point upward.
- For all mounting positions where the vented filler plug is located in a vertical plane, the vent hole must point toward center of housing.

CAUTION

- For safe operation of any gear drive, all rotating shafts and auxiliary components must be shielded to conform with applicable safety standards. You must consider overall operational system safety at all times.
- When using a speed reducer to raise or lower a load, such as in hoisting applications, provision must be made for external braking. Under no conditions should a speed reducer be considered self-locking.
- Mounting of speed reducers in overhead positions may be hazardous. Use of external guides or supports is strongly recommended for overhead mounting.

Key Staking Instructions

Lightly tap area of keyway adjacent to key. This will upset material and not allow key to move axially when assembling to speed reducer.

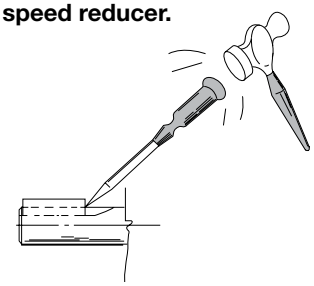

Instructions for Flanged Models

F700 (Quill Type Input)

1. Assemble the key to the motor shaft and coat the quill bore with anti-seize compound. Insert the motor shaft into the reducer input shaft. DO NOT coat motorshaft with anti-seize compound.

2. Rotate the motor to proper position and firmly secure to flange with four hex-head cap screws.

RF700 (Coupling Input – 3-Jaw Type FC)

1. Coat coupling bore with anti-seize compound.

2. Position coupling half on input shaft with shaft flush to end of coupling bore.

3. Locate remaining half on motor shaft, with 1/32" clearance between jaw surfaces.

4. Tighten setscrews securely. For reversing applications, a thread-locking compound is recommended.

5. Install coupling insert and position motor. Rotate motor to proper position and firmly secure to flange.

CAUTION – If the motor does not readily seat itself, check to determine if key has moved axially along motor shaft, causing interference. Staking of the keyway adjacent to the motor key will facilitate this procedure.

QC700 (Coupling Input-3-Jaw Quick Connect Type)

1. Coat coupling bore with anti-seize compound.

2. Install motor coupling half onto motor shaft. Use a straight edge to align coupling jaw top end flush with motor shaft except 738-B9 which will be flush with bottom of jaw. Secure with set screw.

3. Install urethane spider insert on motor coupling half.

4. Insert D-Bore coupling half into urethane spider element.

5. Rotate reducer input shaft so "milled flats" are either vertical or parallel. Rotate motor coupling D-Bore to match the reducer milled flats. Coat "D" flats with anti-seize compound furnished with speed reducer.

6. Insert motor assembly into reducer flange assembly. Minor rotating of the motor may be necessary to facilitate D-Bore alignment.

7. Once aligned, push motor towards reducer until properly seated against the face of the reducer flange.

8. Insert (4) hex head cap screws into the designated locations and securely tighten.

WARNING

Boston Gear speed reducers are normally shipped without lubricant. They must be filled to the proper level with the recommended lubricant for your application before operation.

Lubrication Instructions

The table on Page 135 indicates the type and viscosity of lubricant suitable for reducers operating at various temperatures.

Lubrication and maintenance instructions are provided with each speed reducer. These instructions should be followed for best results. It is important that the proper type of oil be used since many oils are not suitable for the lubrication of gears. Various types of gearing require different types of lubricants.

The lubricant must remain free from oxidation and contamination by water or debris, since only a very thin film of oil stands between efficient operation and failure. To assure long service life, the reducer should be periodically drained (preferably while warm) and refilled to the proper level with a recommended gear oil. Under normal environmental conditions oil changes are suggested after the initial 250 hours or every 6 months.

Synthetic lubricants will allow extended lubrication intervals due to its increased resistance to thermal and oxidation degradation. It is suggested that the initial oil change be made at 1500 hours and, thereafter, at 5000 hour intervals.

During the initial period of operation, higher than normal operating temperatures may be seen. This is due to the initial break-in of the worm gear set. The temperature of Double Reduction Worm Gear Reducers may reach 160°F and Single Reduction Worm Gear Reducers approximately 225°F.

Oil Capacities

Single Reduction Models Only

Oil Levels for typical mounting positions

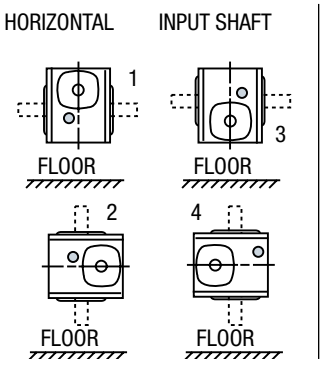

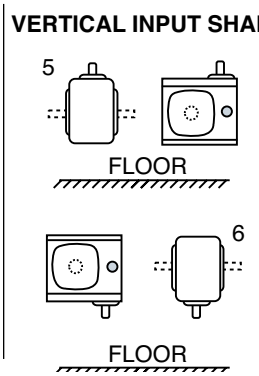

CAUTION

Avoiding those positions where the high speed oil seal is immersed in oil will provide greater security against high speed input seal wear.

OIL CAPACITY IN FLUID OUNCES

Unit Size	Position				
	1	2	3	4	5 & 6
710	2.2	3.3	3.3	3.3	3.3
713	5.5	7.0	7.0	7.0	5.5
715	10.0	15.0	15.0	13.5	13.5
718	12.0	16.0	18.5	16.0	16.0
721	15.0	20.5	20.5	19.0	19.0
724	18.0	24.5	28.5	24.5	24.5
726	28.0	36.0	43.0	36.0	36.0
730	43.0	60.0	66.0	58.0	58.0
732	58.0	84.0	90.0	80.0	80.0
738	85.0	120.0	130.0	120.0	107.0
752	204.0	240.0	245.0	240.0	215.0
760	330.0	400.0	415.0	400.0	370.0

- Indicates proper oil level.
- When mounting gearboxes in positions 2, 3, 4, 6 Double Input Seals are required.

Double Reduction Models

The variety of mounting possibilities for double reduction drives makes it impractical to illustrate positions for these models. In general, the vent filler is at the uppermost plug position, and the drain plug at the lowest possible position. The oil level must be at the approximate centerline of the uppermost gear.

Recommended Lubricants

ENCLOSED WORM GEAR REDUCERS

AMBIENT (Room) TEMPERATURE	RECOMMENDED OIL (or equivalent)	VISCOSITY RANGE SUS @ 100°F	Oil Type	ISO VISCOSITY GRADE NO.†
–20° to 225°F** (–29° to 107°C)	Klubersynth* UH1 6-460 Synthetic	1950/2500	PAG	460
–30° to 225°F** (–34° to 107°C)	Mobil SHC634 Synthetic	1950/2500	PAO	320/460

WORM GEAR LUBRICANTS AVAILABLE FROM BOSTON GEAR ORDER BY ITEM CODE

Type	Klubersynth UH1 6-460	Mobil SHC634
Size	QT.	QT.
Item Code	65159	51493

Available in quarts only

CAUTION: Relubricate more frequently if drive operated in high ambient temperatures or unusually contaminated atmosphere. High loads and operating temperatures will also require more frequent lubrication.

* Synthetic recommendation is Klubersynth UH1 6-460, the use of other lubrications may reduce efficiency and torque capacity.

** The Klubersynth UH1 6-460 lubricant will perform at temperatures considerably higher than 225°F. However, the factory should always be consulted prior to operating at higher temperature as damage may occur to oil seals and other components.

† Other lubricants corresponding to AGMA/ISO numbers are available from all major oil companies.

Lubricant Interchange

1. Ambient temperature is based upon 1.0 service factor.

2. Lubricants are compounded for use in worm gears. Some contain non-corrosive, extreme pressure additives. DO NOT USE lubes that contain sulphur and/or chlorine which are corrosive to bronze gears. Extreme pressure lubes, in some cases contain materials that are toxic. Avoid use of these lubes where they can result in harmful effects. If in doubt, consult your lube supplier.

WARNING: Different oil types should not be mixed. For example Klubersynth UH1 6-460 is not compatible with Mobil SHC634.

Manufacturer	Lubricant Name	AGMA Rating
Getty Refining Co. Getty Refining Co. Getty Refining Co.	Veedol Asreslube 98 Veedol Asreslube 95 Veedol Asreslube 90	8 EP 7 EP 6 EP
Lubrication Engr. Inc. Lubrication Engr. Inc.	Almasol 609 Almasol 608	8 7
Mobil Oil Corp. Mobil Oil Corp. Mobil Oil Corp.	Mobilgear 634 Mobil Extra Hecla Super Mobil Cylinder 600W	8 EP 8 7
Shell Oil Co. Shell Oil Co. Shell Oil Co. Shell Oil Co.	Omala 460 Valvala J460 Omala 680 Valvala J680	7 EP 7 8 EP 8
Texaco Inc. Texaco Inc.	Meropa 680 Meropa 460	8 EP 7 EP

E

Parts List – Single Reduction Models

Models 710-760

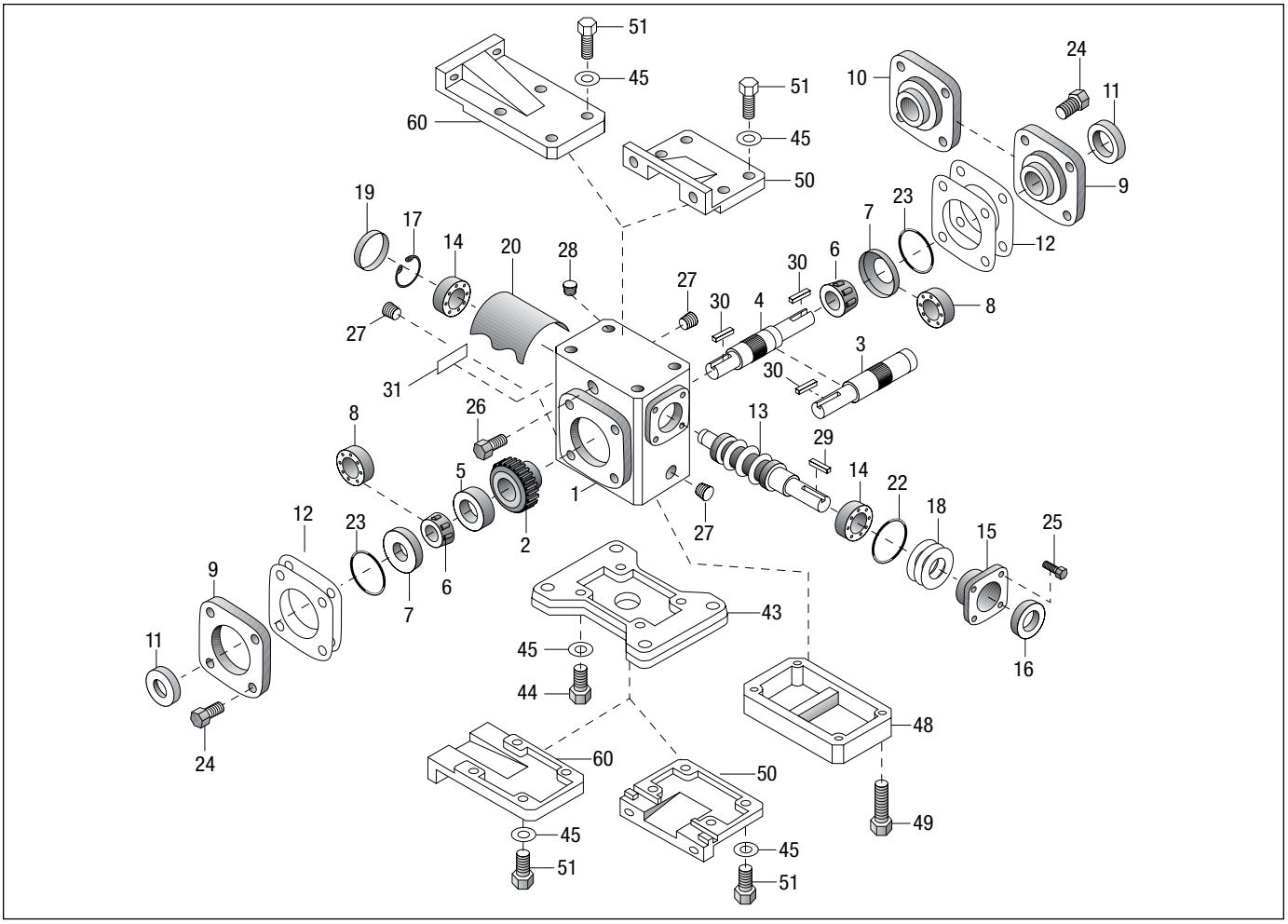

Part No.	Description
1	HOUSING
2*	WORM GEAR
3*	SINGLE PROJECTING OUTPUT SHAFT
4*	DOUBLE PROJECTING OUTPUT SHAFT
5*	GEAR SPACER
6*	OUTPUT BEARING (CONE) – MODELS 713-760
7	OUTPUT BEARING (CUP) – MODELS 713-760
8	OUTPUT BEARING – MODEL 710 ONLY
9	BEARING CARRIER (OPEN)
10	BEARING CARRIER (CLOSED)
11*	OUTPUT OIL SEAL
12*	ADJUSTMENT SHIMS
13	INPUT WORM SHAFT
14	INPUT BEARING – MODELS 710-730
15	INPUT BEARING RETAINER
16	INPUT OIL SEAL – MODELS 710-760
17	RETAINING RING
18	ADJUSTMENT SHIMS
19	BORE PLUG – MODELS 710-730
20	INTERNAL BAFFLE – MODELS 713-760
22	INPUT "O" RING
23*	OUTPUT "O" RING
24	HEX HEAD CAP SCREW
25	HEX HEAD CAP SCREW

Part No.	Description
26**	VENT PLUG – 2 PIECE
27	PIPE PLUG
28	PROTECTIVE CAP PLUG (BK & SBK ONLY)
29	INPUT KEY
30	OUTPUT KEY
31	NAMEPLATE
32	INPUT BEARING (CUP) – MODELS 732-760
33	INPUT BEARING (CONE) – MODELS 732-760
34	GREASE CUPS – MODELS 732-760
35	HEX HEAD CAP SCREW
37	OUTPUT GEAR KEY – MODELS 730-760
38	RETAINING RING – MODELS 710-738
39	MOTOR SHAFT – MODELS 710-738
40	MOTOR FLANGE – MODELS 710-738
41	OIL SEAL – MODELS 710-738
42	HEX HEAD CAP SCREW
43	HORIZONTAL BASE
44	HEX HEAD CAP SCREW
45	LOCKWASHER
46	2 PIECE FC/BF COUPLING – WITH INSERT
47	RETAINING MOTOR FLANGE
48	RISER BLOCK (MODELS 710-732)
49	HEX HEAD CAP SCREW (MODELS 710-732)
50	VERTICAL BASE (HIGH OR LOW)

Part No.	Description
51	HEX HEAD CAP SCREW
60	VERTICAL BASE (X & Y ASSEMBLY 713-726)
101	FAN
102	SPACER
103	HEX HEAD CAP SCREW
104	FAN GUARD
105	HEX HEAD CAP SCREW
106	WASHER
165	HOLLOW OUTPUT SHAFT (S VERSION ONLY)
166	HOLLOW OUTPUT SHAFT (H VERSION ONLY)
167	WORM GEAR
168	OUTPUT BEARING (CONE)
169	OUTPUT BEARING (CUP)
170	OIL SEAL
171	BEARING CARRIER
172	HOLLOW SHAFT MTG. BRACKET
173	HEX HEAD CAP SCREW
174	LOCKWASHER
175	KEY (INTERNAL)
176	KEY (EXTERNAL)
177	"V" TYPE BASE-MODEL 718, 721,726, 732)
178	SOCKET SETSCREW

* For Models 710 to 726, these parts are available as complete assemblies. See Part Ordering Information, page 137.
** Extension not required on single reduction Models 713 through 732.

E

Options & Accessories – Single Reduction Models

Hollow output Shaft Models S and SF718-732*

MODEL 02

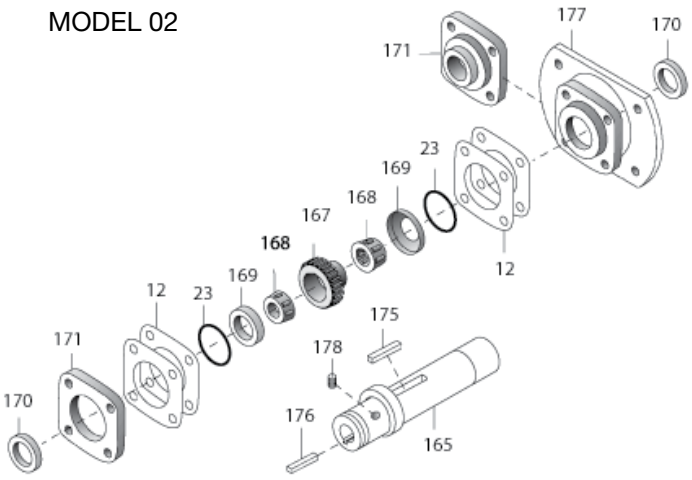

Models 732-760

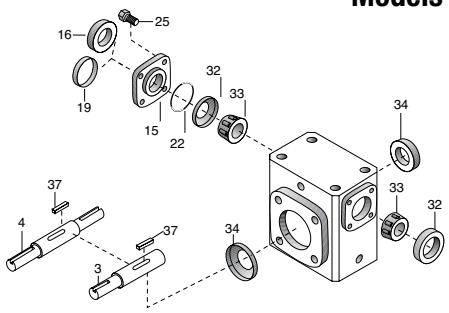

Fan Kit for Models 732-760

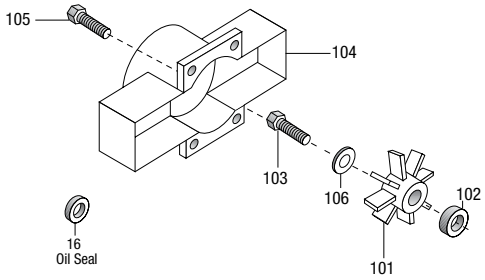

Hollow Output Shaft Models H, HF, and HQC713-752

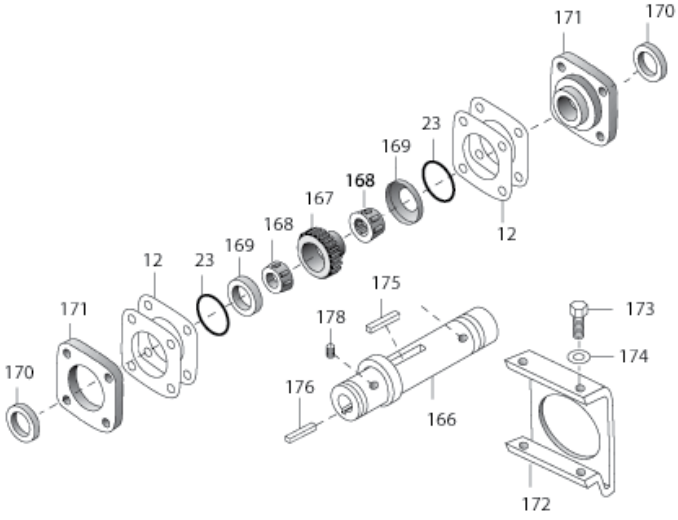

Models QC710-QC738 RF752-RF760

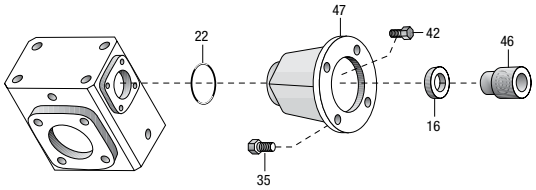

Models F710-F738

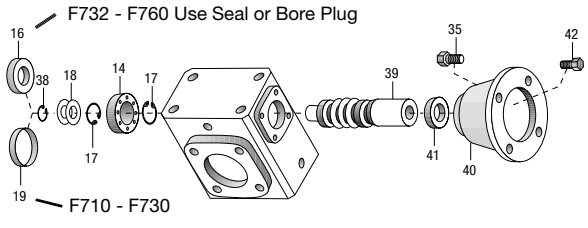

PART ORDERING INFORMATION

1. Be sure to provide complete Boston Gear catalog number from speed reducer nameplate, along with part description and number. For example, "One output oil seal, Part No. 11, for QC718-30-B5-G".
2. Output shaft components for Boston Gear models 710 through 726 are available only as complete assemblies that include Parts 2, 3, 5, 6, 11, 12 and 23 for single projecting shafts; and Parts 2, 4, 5, 6, 11, 12 and 23 for double projecting shafts. When ordering, specify "output shaft assembly" and full Boston Gear catalog number from nameplate.

* Not available in the 730 center distance, see H series.

E

Parts List – Double Reduction Models

Models W713-W760

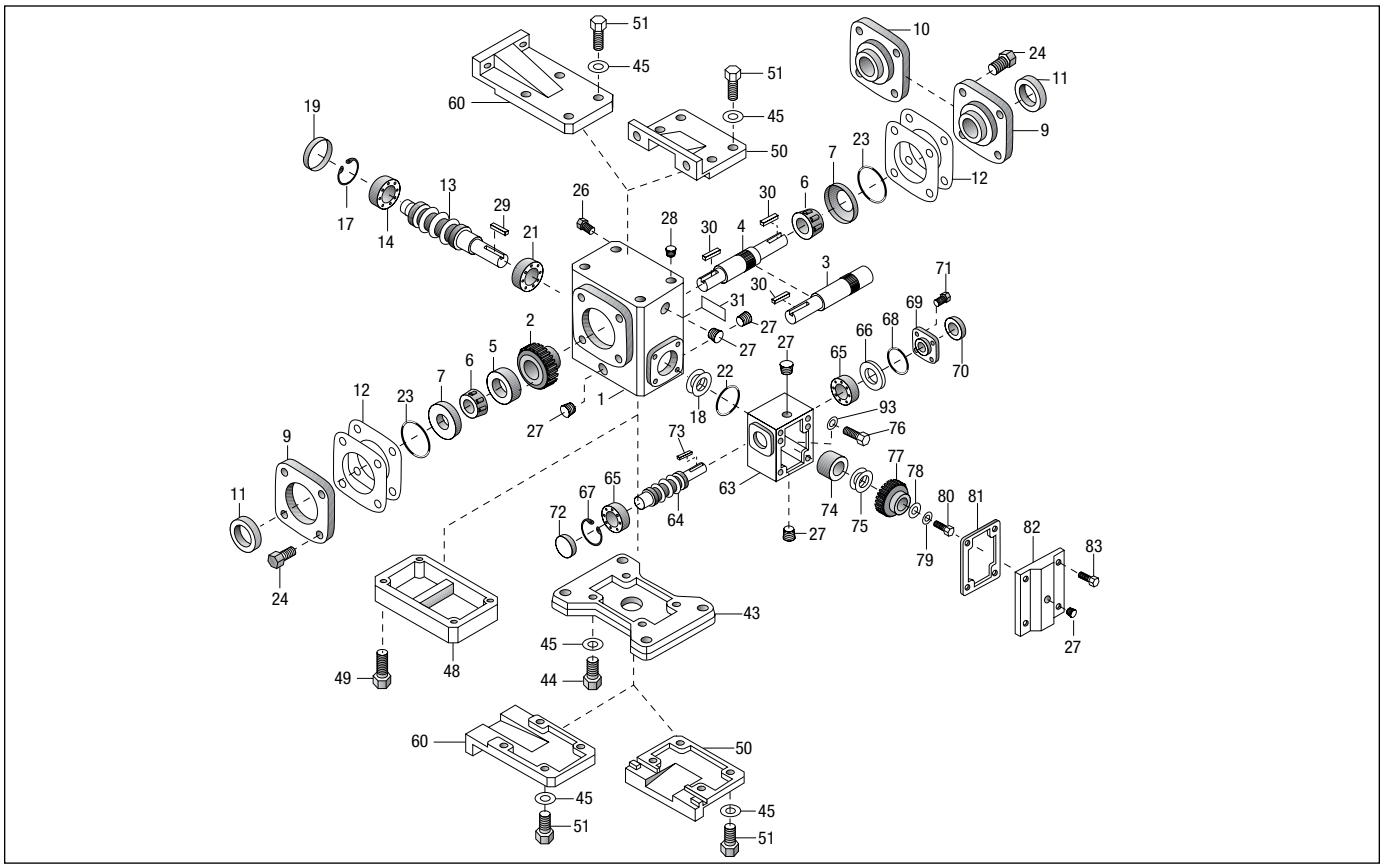

Part No.	Description
1	HOUSING
2*	WORM GEAR
3*	SINGLE PROJECTING OUTPUT SHAFT
4*	DOUBLE PROJECTING OUTPUT SHAFT
5*	GEAR SPACER
6*	OUTPUT BEARING (CONE)
7	OUTPUT BEARING (CUP)
9	BEARING CARRIER (OPEN)
10	BEARING CARRIER (CLOSED)
11*	OUTPUT OIL SEAL
12*	ADJUSTMENT SHIMS
13	INTERMEDIATE WORM SHAFT
14	INTERMEDIATE BEARING–MODELS W713-W730
15	INTER. BEARING RETAINER–MODELS W732-760
16	INTER. OIL SEAL – MODELS W732-W760
17	RETAINING RING – MODELS W713-W730
18	ADJUSTMENTS SHIMS
19	BORE PLUG – MODELS W713-W730
21	INTERMEDIATE BEARING
22	INTERMEDIATE “O” RING
23*	OUTPUT “O” RING
24	HEX HEAD CAP SCREW
25	HEX HEAD CAP SCREW
26	VENT PLUG – 2 PIECE
27	PIPE PLUG
28	PROTECTIVE CAP PLUG
29	INTERMEDIATE KEY
30	OUTPUT KEY
31	NAMEPLATE

Part No.	Description
32	INTER. BEARING (CUP) – MODELS W732-W760
33	INTER. BEARING (CONE) – MODELS W732-W760
34	GREASE CUPS – MODELS W732-W760
35	HEX HEAD CAP SCREW
37	OUTPUT GEAR KEY – MODELS W730-W760
43	HORIZONTAL BASE
44	HEX HEAD CAP SCREW
45	LOCKWASHER
48	RISER BLOCK
49	HEX HEAD CAP SCREW
50	VERTICAL BASE (HIGH OR LOW)
51	HEX HEAD CAP SCREW
60	VERTICAL BASE (ASSEMBLY X & Y 713 - 726)
63	ATTACHMENT HOUSING
64	INPUT WORM SHAFT
65	INPUT BEARING
66	ADJUSTMENT SHIMS
67	RETAINING RING
68	“O” RING
69	BEARING RETAINER
70	OIL SEAL
71	HEX HEAD CAP SCREW
72	BORE PLUG – MODELS W713-W752
73	INPUT WORM SHAFT KEY
74	GEAR SPACER - INTERMEDIATE
75	ADJUSTMENT SHIMS
76	HEX HEAD CAP SCREW
77	INTERMEDIATE WORM GEAR
78	WASHER

Part No.	Description
79	LOCKWASHER
80	HEX HEAD CAP SCREW
81	ATTACHMENT COVER GASKET
82	ATTACHMENT COVER
83	HEX HEAD CAP SCREW
84	INPUT BEARING (CONE) – MODEL W760 ONLY
85	INPUT BEARING (CUP) – MODEL W760 ONLY
86	TWO PIECE COUPLING WITH INSERT
87	MOTOR FLANGE
88	HEX HEAD CAP SCREW
89	MOTOR FLANGE
90	INPUT WORM SHAFT
91	EXTERNAL RETAINING RING
92	OIL SEAL – MODELS FW713-FW752
93	WASHER
165	HOLLOW OUTPUT SHAFT (S VERSION ONLY)
166	HOLLOW OUTPUT SHAFT (H VERSION ONLY)
167	WORM GEAR
168	OUTPUT BEARING (CONE)
169	OUTPUT BEARING (CUP)
170	OIL SEAL
171	BEARING CARRIER
172	HOLLOW SHAFT MTG. BRACKET
173	HEX HEAD CAP SCREW
174	LOCKWASHER
175	KEY (INTERNAL)
176	KEY (EXTERNAL)
177	“V” TYPE BASE MODEL (718, 721, 726, 732)

* For Models 710 to 726, these parts are available as complete assemblies. See Part Ordering Information, Page 139.

Options & Accessories – Double Reduction Models

Hollow Output Shaft Models SW, SFW, and SRFW718-732*

MODEL 02

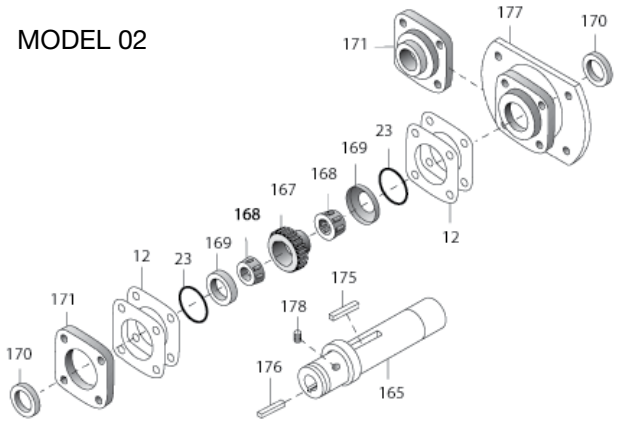

Models W732-W760

Parts added to W732-W760

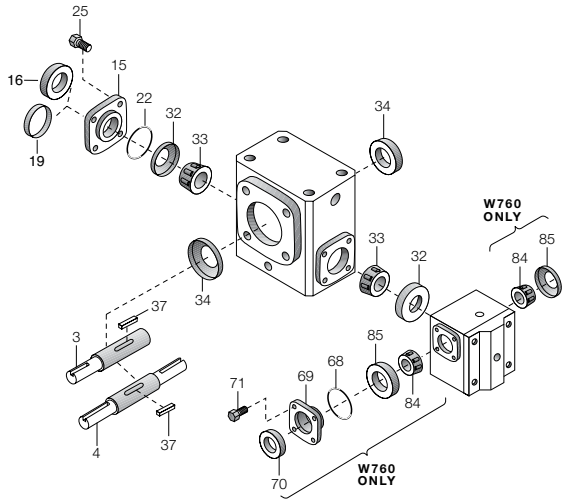

Hollow Output Shaft Models HW, HFW, and HQCW713-738

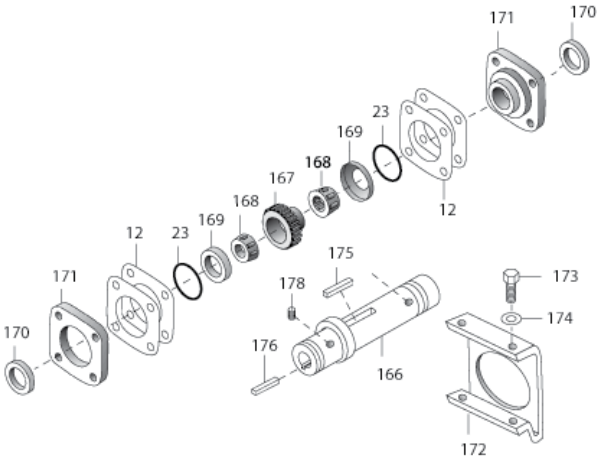

Models FW713-FW752

Parts added to W713-W752.

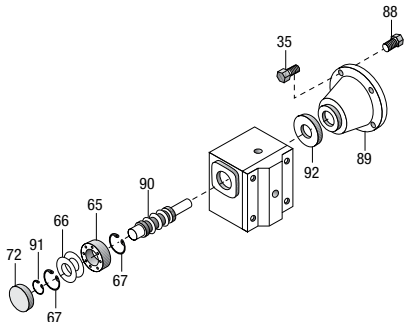

Models QCW713-QCW760

parts added to W713-W730 OR W732-W760. these parts available IN KIT FORM.

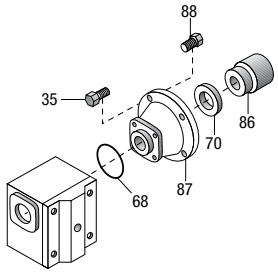

E

PART ORDERING INFORMATION

1. Be sure to provide complete Boston Gear catalog number from speed reducer nameplate, along with part description and number. For example, “One output oil seal, Part No. 11, for W713-150-G”.
2. Output shaft components for Boston Gear models 710 through 726 are available only as complete assemblies that include Parts 2, 3, 5, 6, 11, 12 and 23 for single projecting shafts; and Parts 2, 4, 5, 6, 11, 12 and 23 for double projecting shafts. When ordering, specify “output shaft assembly” and full Boston Gear catalog number from nameplate.

* Not available in 730 center distance, see H series.

700 Series Lifetime Warranty

The Company warrants that all 700 Series speed reducers will be free from defects in material and workmanship over the lifetime of the product.

Oil seals are considered to be replaceable maintenance items.

Any products which shall be proved to the Company's satisfaction to have been defective at the time of delivery in these respects will be replaced or repaired by the Company at its option. Freight is the responsibility of the customer. The Company's liability under this warranty is limited to such replacement or repair and it shall not be held liable in any form of action for direct or consequential damages to property or person. The foregoing warranty is expressly made in lieu of all other warranties whatsoever, express, implied and statutory and including without limitation the implied warranties of merchantability and fitness.

No employee, agent, distributor, or other person is authorized to give additional warranties on behalf of Boston Gear, nor to assume for Boston Gear any other liability in connection with any of its products, except an officer of Boston Gear by a signed writing.

WARNING

Boston Gear speed reducers are normally shipped without lubricant. They must be filled to the proper level with the recommended lubricant for your application. Klubersynth UH1 6-460 is exclusively recommended by the factory, other lubricants will void warranty.

These instructions must be read thoroughly before installing or operating speed reducers. File instructions for future reference and for ordering of replacement parts.

F

Single Reduction Flanged Reducers & Non-Flanged Reducers

Ordering Information – Pages 143-146
Selection/Rating Information – Pages 143-146
Lubrication – Pages 143-146



F309B
Dimensions - Page 143



309 A & B
Dimensions - Page 146

Double Reduction Flanged Reducers & Non-Flanged Reducers

Ordering Information — Pages 144-147
Selection/Rating Information — Pages 144-147
Lubrication — Pages 144-147



FWA309A
Dimensions - Page 144



WA309A
Dimensions - Page 146

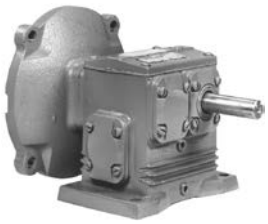

TWF113A
Dimensions - Page 145



TW113A
Dimensions - Page 148

Section Contents

Product Reference Guide **141**
Single Reduction – F309B **143**
Double Reduction – FWA309A. **144**
Double Reduction – TWF113A. **145**
Single Reduction – 309 A/B **146**
Double Reduction – WA309A. **147**
Double Reduction – TW113A. **148**

Sub-Fractional HP Speed Reducers

113 and 309 Series Catalog Numbers

Position Info

113 Series Catalog Number

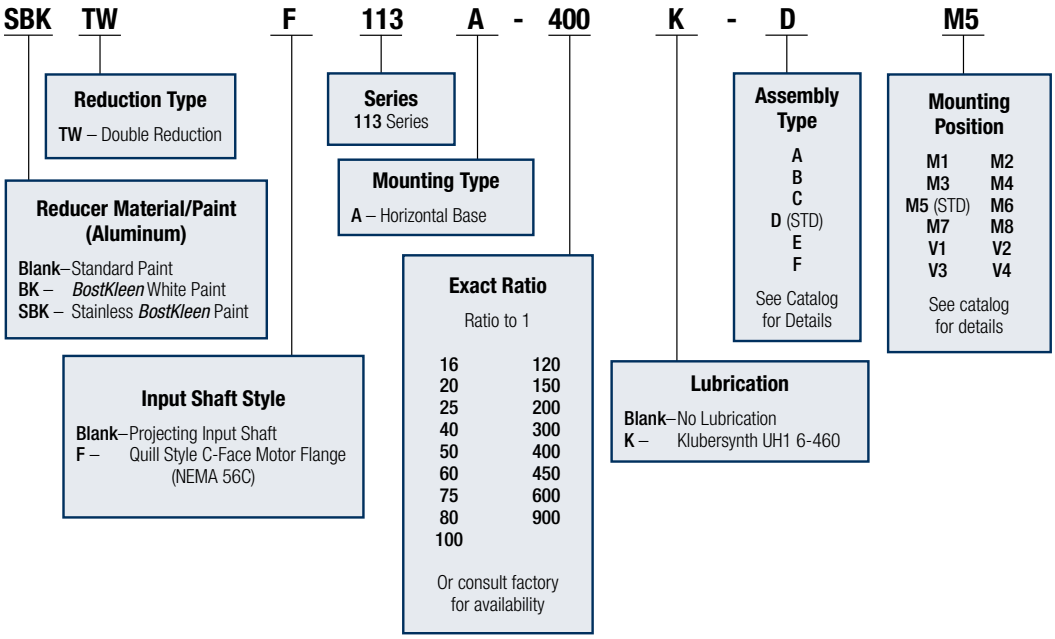

309 Series Catalog Number

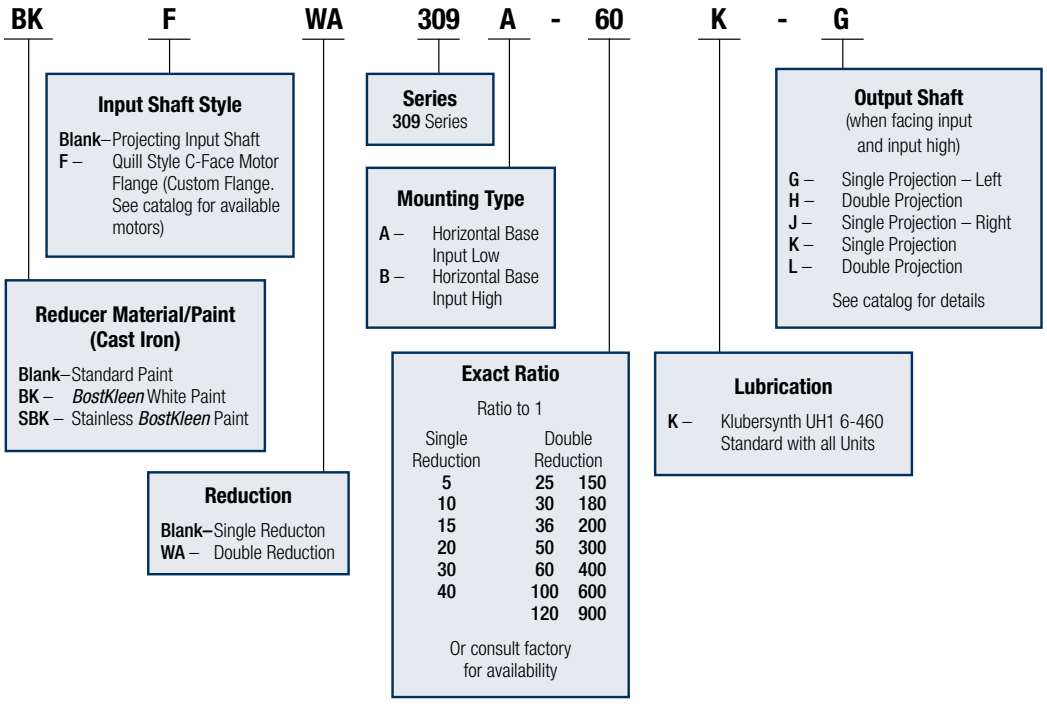

Sub-Fractional HP Single Reduction Flanged Reducers

F309B Series Flanged Quill Type

Integral Horizontal Base

F

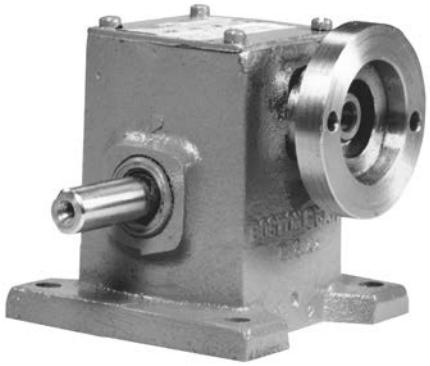

LUBRICATION – Prelubricated for Ambient Temperature Range of -20° to +125° F. For all mounting positions.

TO ORDER: Specify Catalog Number and Assembly Type.

EXAMPLE: F309B-10-G

1750 INPUT RPM

Motor HP	Output			Gear Capacity		Ratio	Catalog Number	Motor Cat. No.
	RPM	Torque (LB. In.)	HP	Torque (LB. In.)	HP			115-1-60 Open**
1/20	350	6	.03	14	.078	5	**F309B-5-K**	AST-B
	175	12	.03	25	.069	10	**F309B-10-K**	
	116.7	15	.03	30	.056	15	**F309B-15-K**	
	87.5	23	.03	43	.060	20	**F309B-20-K**	
	58.3	30	.03	30	.031	30	**F309B-30-K**	
	43.8	31	.02	31	.022	40	**F309B-40-K**	
1/12	350	9	.05	14	.078	5	**F309B-5-K**	AAST-B
	175	16	.04	25	.069	10	**F309B-10-K**	
	116.7	22	.04	30	.056	15	**F309B-15-K**	
	87.5	30	.04	43	.060	20	**F309B-20-K**	

** Open Dripproof. For motor dimensions, see Page 343.

Dimensions

Assembly Types

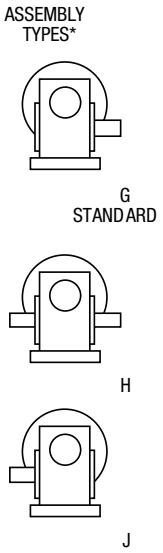

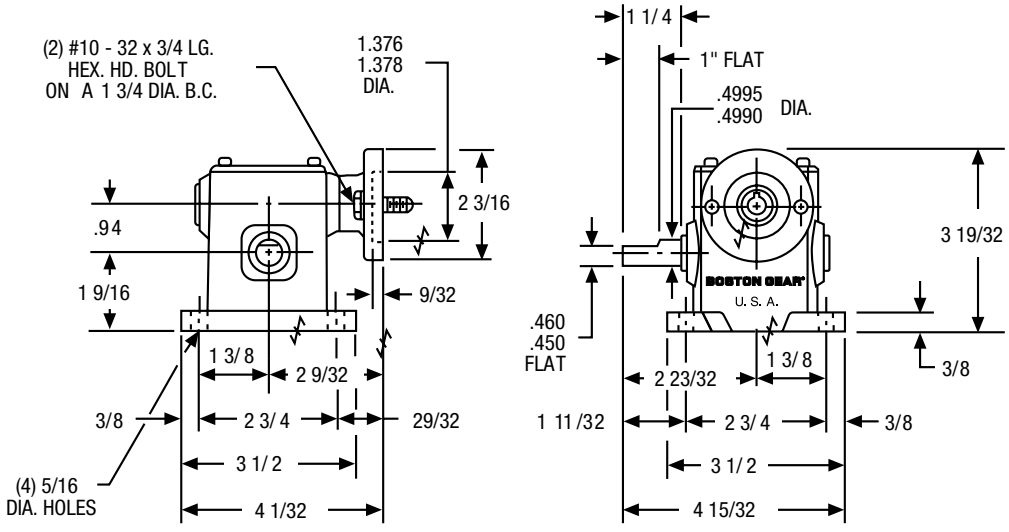

* Assemblies define output (slow speed) shaft projection with respect to input (high speed) shaft and mounting surfaces. Input may be rotated clockwise or counterclockwise.

Sub-Fractional HP Double Reduction Flanged Reducers

FWA309A Series Flanged Quill Type

Integral Horizontal Base; Parallel Shafts

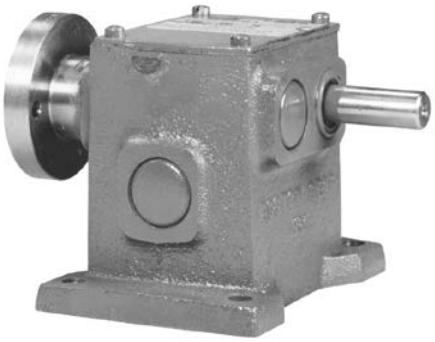

LUBRICATION – Prelubricated for Ambient Temperature Range of -20° to +125° F. For all mounting positions.

TO ORDER: Specify Catalog Number and Assembly Type.

EXAMPLE: FWA309A-50-K

1750 INPUT RPM

Motor HP	Output			Gear Capacity		Ratio	Catalog Number	Motor Cat. No.
	RPM	Torque (LB. In.)	HP	Torque (LB. In.)	HP			115-1-60 Open**
1/20	70.0	25	.028	50	.056	25	**FWA309A-25-K**	AST-B
	58.3	29	.027	50	.046	30	**FWA309A-30-K**	
	48.6	25	.019	40	.031	36	**FWA309A-36-K**	
	35.0	35	.019	55	.031	50	**FWA309A-50-K**	
	29.2	43	.020	43	.020	60	**FWA309A-60-K**	
	17.5	45	.012	60	.017	100	**FWA309A-100-K**	
	14.6	55	.012	55	.012	120	**FWA309A-120-K**	
	11.7	45	.008	45	.008	150	**FWA309A-150-K**	
	9.7	45	.007	45	.007	180	**FWA309A-180-K**	
	8.8	65	.009	65	.009	200	**FWA309A-200-K**	

** Open Dripproof. For motor dimensions, see Page 343.

Dimensions

Assembly Types

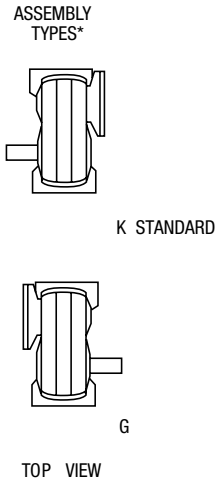

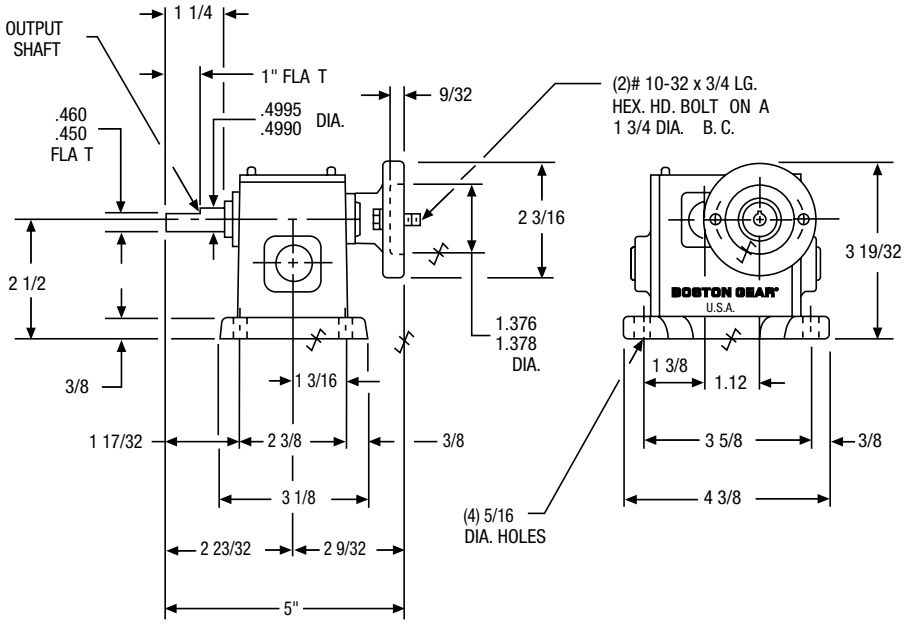

* Assemblies define output (slow speed) shaft projection with respect to input (high speed) shaft and mounting surfaces. Input may be rotated clockwise or counterclockwise.

TWF113A Series **Flanged Quill Type**

Integral Horizontal Base*; Parallel Shafts

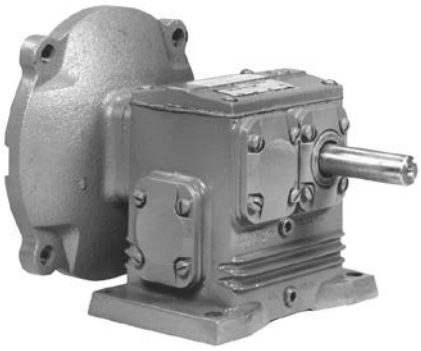

LUBRICATION – Quantity - 1/2 Pint.
MUST BE ORDERED SEPARATELY.
See Lubrication Instructions, Page 134

1750 INPUT RPM

Motor HP	OutPut RPM	OutPut Torque (LB. In.)	OutPut HP	Ratio	Catalog Number	Motor Cat. No. 115/230-1-60 OPEN**
1/6	17.5	228	.06	100	**TWF113A-100**	CR-W
	11.7	244	.045	150	**TWF113A-150**	
	8.8	246	.034	200	**TWF113A-200**	
	5.8	280	.026	300	**TWF113A-300**	
	4.4	250	.017	400	**TWF113A-400**	
	2.9	295	.014	600	**TWF113A-600**	
	1.9	295	.009	900	**TWF113A-900**	

* Base is not detachable.
** Open Dripproof. For motor dimensions, see Page 343.

Dimensions

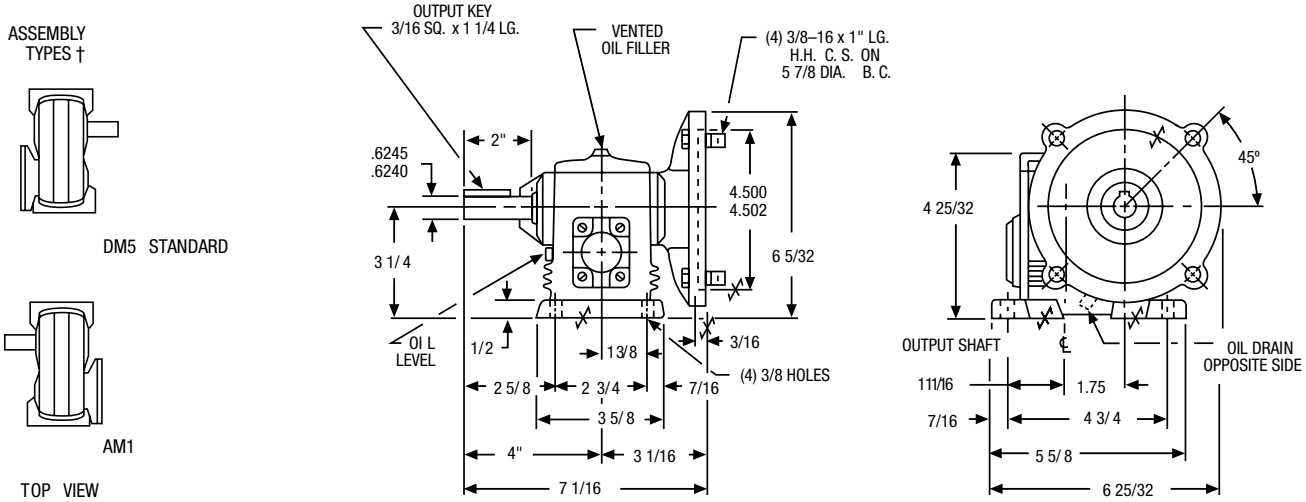

Approx. Weight: 10 lbs.

† Assemblies define output (slow speed) shaft projection with respect to input (high speed) shaft and mounting surfaces, viewed from end of input shaft.

Input may be rotated clockwise or counterclockwise. Arrows indicate relative rotation. Assembly H available at slight additional charge.

Sub-Fractional HP Single Reduction Non-Flanged Reducers

309A/309B Series

A Position Horizontal Base**; B Position Horizontal Base**



LUBRICATION – Prelubricated for Ambient Temperature Range of -20° to +125° F. For all angle operation.

TO ORDER: Specify Catalog Number and Assembly Type.

EXAMPLE: 309B-20-G

1750 INPUT RPM

OutPut			Approx Input HP	Ratio	Catalog Numbers	
RPM	Torque †	HP			A Base Position	B Base Position
350	14	.078	.12	5	**309A-5-K**	**309B-5-K**
175	25	.069	.13	10	**309A-10-K**	**309B-10-K**
116.7	30	.056	.17	15	**309A-15-K**	**309B-15-K**
87.5	43	.060	.17	20	**309A-20-K**	**309B-20-K**
58.3	33	.031	.10	30	**309A-30-K**	**309B-30-K**
43.2	31	.022	.07	40	**309A-40-K**	**309B-40-K**

** Base is not detachable.
† Maximum torque in Pound Inches.

309A Dimensions

ASSEMBLY TYPES*

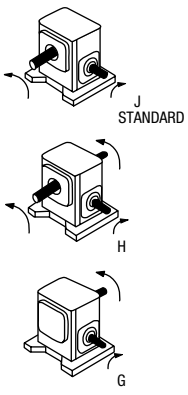

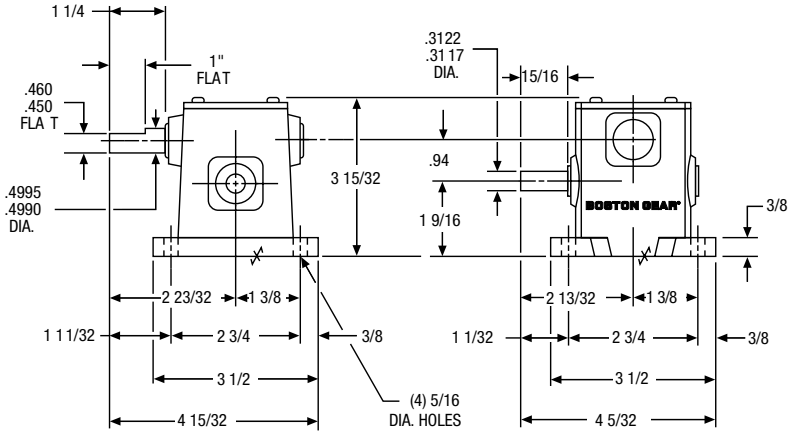

309B Dimensions

ASSEMBLY TYPES*

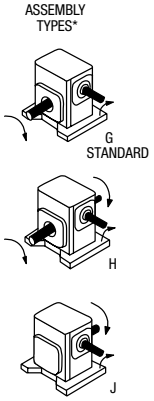

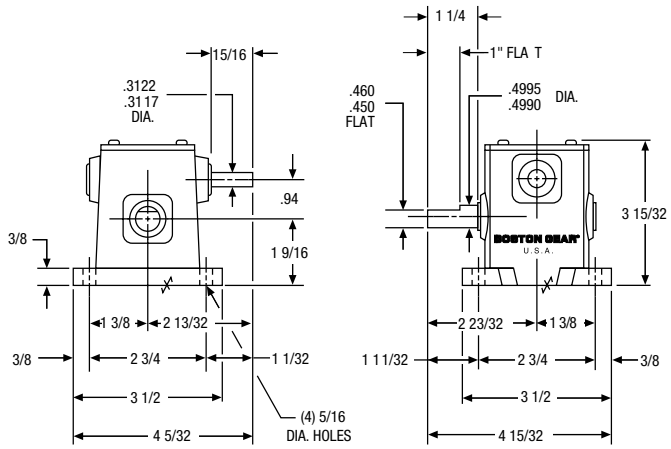

WA309A Series
Horizontal Base**; Parallel Shafts



LUBRICATION – Prelubricated for Ambient Temperature Range of -20° to +125° F.

TO ORDER: Specify Catalog Number and Assembly Type.

EXAMPLE: WA309A-25-K

1750 INPUT RPM

OutPut			Approx Input HP	Ratio	Catalog Number
RPM	Torque †	HP			
70.0	50	.056	.12	25	**WA309A-25-K**
58.3	50	.046	.10	30	**WA309A-30-K**
48.6	40	.031	.08	36	**WA309A-36-K**
35.0	55	.031	.08	50	**WA309A-50-K**
29.2	43	.020	.07	60	**WA309A-60-K**
17.5	60	.017	.06	100	**WA309A-100-K**
14.6	55	.012	.07	120	**WA309A-120-K**
11.7	45	.008	.05	150	**WA309A-150-K**
9.7	45	.007	.046	180	**WA309A-180-K**
8.8	65	.009	.06	200	**WA309A-200-K**
5.8	45	.004	.033	300	**WA309A-300-K**
4.4	65	.005	.06	400	**WA309A-400-K**
2.9	45	.002	.032	600	**WA309A-600-K**
1.9	45	.001	.026	900	**WA309A-900-K**

** Base is not detachable.
† Maximum Torque in Pound Inches.

Dimensions

ASSEMBLY TYPES**

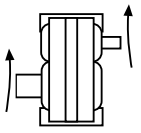

K STANDARD

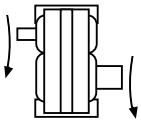

G

TOP VIEW

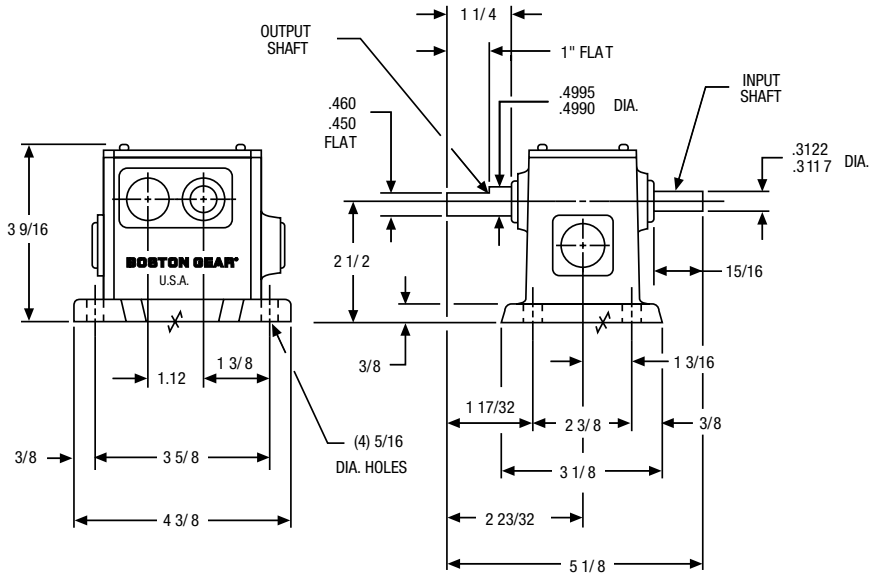

Approx. Weight 5 lbs.

* Assemblies define output (slow speed) shaft projection with respect to input (high speed) shaft and mounting surfaces. Input may be rotated clockwise or counterclockwise.

Sub-Fractional HP **Double Reduction Non-Flanged Reducers**

TW113A Series

Horizontal Base**; Parallel Shafts

F

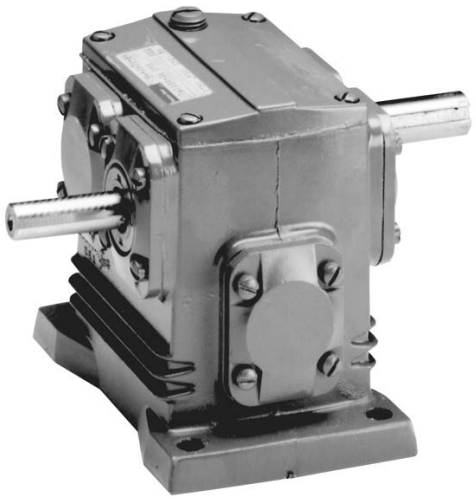

LUBRICATION – Quantity - 1/2 Pint.
MUST BE ORDERED SEPARATELY.
See Lubrication Instructions, Page 134.

TO ORDER: Specify Catalog Number and Assembly Type.

EXAMPLE: TW113A-16-DM5.

1750 INPUT RPM

OutPut			Approx Input HP	Ratio	Catalog Number
RPM	Torque †	HP			
109.4	150	.26	.55	16	**TW113A-16**
87.5	180	.25	.57	20	**TW113A-20**
70.0	185	.21	.50	25	**TW113A-25**
43.8	185	.13	.33	40	**TW113A-40**
35.0	210	.12	.31	50	**TW113A-50**
29.2	200	.093	.24	60	**TW113A-60**
23.3	220	.081	.23	75	**TW113A-75**
21.9	225	.078	.22	80	**TW113A-80**
17.5	228	.063	.17	100	**TW113A-100**
14.6	235	.054	.18	120	**TW113A-120**
11.7	244	.045	.17	150	**TW113A-150**
8.8	246	.034	.12	200	**TW113A-200**
5.8	280	.026	.12	300	**TW113A-300**
4.4	250	.017	.12	400	**TW113A-400**
3.9	288	.018	.10	450	**TW113A-450**
2.9	295	.014	.08	600	**TW113A-600**
1.9	295	.009	.08	900	**TW113A-900**

** Base is not detachable.
† Maximum torque in Pound Inches.

Dimensions

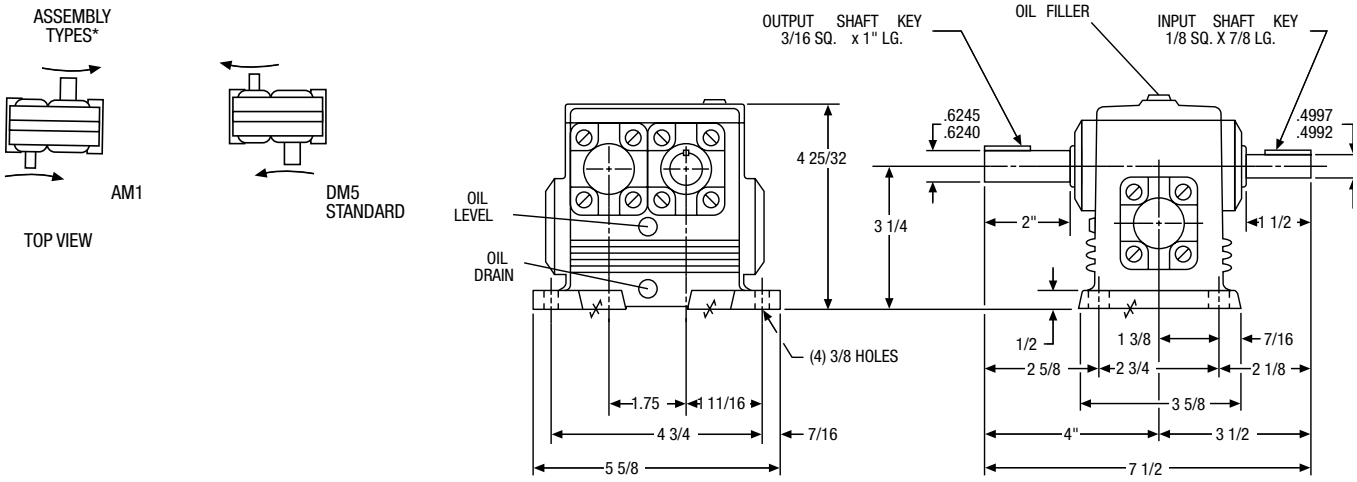

Approx. Weight 6 lbs.

* Assemblies define output (slow speed) shaft projection with respect to input (high speed) shaft and mounting surfaces. Input may be rotated clockwise or counterclockwise.

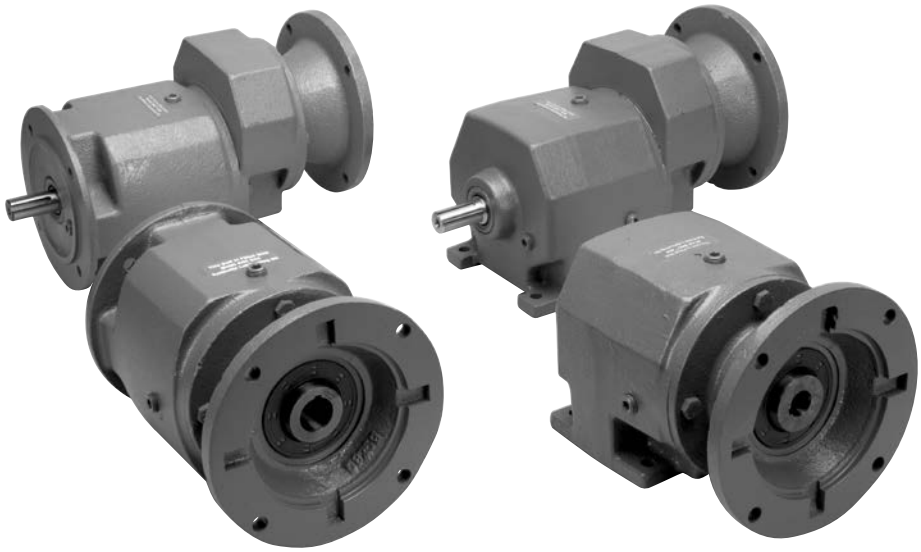

G

Section Contents

Product Reference Guide 150

Numbering System / How to Order 151

Interchange and Selection Procedure 152-153

Mountings 155

Lubrication 156

Overhung Load / Weights 157-158

Output RPM Selection Tables 159-175

Reducer Ratings 176-185

Dimentions 186-193

Washdown Duty / Parts List 194-195

800 Series Inline Helical Gear Drives

F800B Series
In-Line Helical Gear
Flanged Input



Double Reduction
Foot Mounted, Flange Input
Selection Pages 159-175
Dimensions-Page 186



Triple Reduction
Foot Mounted, Flange Input
Selection Pages 159-175
Dimensions-Page 187



Double Reduction
Output Flange Mount, Flange Input
Selection Pages 159-175
Dimensions-Page 188



Triple Reduction
Output Flange Mount, Flange Input
Selection Pages 159-175
Dimensions-Page 189

800B Series
In-Line Helical Gear
Non-Flanged Input



Double Reduction
Foot Mounted
Selection Pages 176-185
Dimensions-Page 190



Triple Reduction
Foot Mounted
Selection Pages176-185
Dimensions-Page 191



Double Reduction
Output Flange Mount
Selection Pages 176-185
Dimensions-Page 192



Triple Reduction
Output Flange Mount
Selection Pages 176-185
Dimensions-Page 193

Numbering System / How to Order

800 Series In-Line Helical Gear Drives

Clutch/Brake

Motor

*BK F 8 3 2 B F – 45 K T – B5 – S – M1 – CMBA56U-6 – HUTF5/8-IDB – 3

Series
800B Series

Frame Size
3
4
6
7

Base/Mounting Attachment
Blank–Foot Mounted
F – Output Flange

Input Shaft Style
Blank–Solid Projecting Input Shaft
F – Quill Style C-Face Motor Flange

Nominal Gear Ratio
(Rounded Value)
Refer to Selection Tables For Available Ratios

Input Oil Seal
Blank–Standard Seal
T –Two Standard Seals

Reduction Type
2 – Double
3 – Triple

Lubrication
Blank–No Lubrication
K – Klubersynth UH1 6-460
W – Klubersynth GH6
S – Mobil SHC 634
X – Mobil 600W
(Sizes 3 and 4 are non-vented)

Reducer Material/Paint
Blank–Cast Iron, Std Gray Paint
BK – Cast Iron, White *BostKleen* Paint
SBK – Cast Iron, Stainless *BostKleen* Paint

NEMA Motor Mounting

BORE CODE	NEMA MOUNTING	INPUT BORE	KEYWAY
B5	56C	.625	3/16 x 3/32
B7	140TC/180C	.875	3/16 x 3/32
B9	180TC/210C	1.125	1/4 x 1/8
B11	210TC/250UC	1.375	5/16 x 5/32

Blank Solid Input Shaft (No Flange)

Output Shaft
Blank–Standard Carbon Steel
S– Stainless Material

Mounting Positions
For Factory Prelubrication Specify Mounting Position
Blank– No Lubrication
M1-M9– Lubrication per Mounting Positions in Catalog

Common C-Face Brakes Installed

115/230 VAC 60hz	Ft-Lb	Bore Code
CMBA56R-3	3	B5
CMBA56R-6	6	B5
CMBA140TR-6	6	B7
208-230/460 VAC 60hz	**Ft-Lb**	**Bore Code**
CMBA56U-3	3	B5
CMBA56U-6	6	B5
CMBA140TU-6	6	B7

Other sizes available. See catalog.

Motor Conduit Box Orientation
(When looking at fan end of motor)
0 – 12 O'clock
3 – 3 O'clock
6 – 6 O'clock
9 – 9 O'clock

Common C-Face Motors Installed

AC Voltage	Bore Code	115/208-230-1-60	208-230/460-3-60
1/4 HP	B5	DRTFB	DUTFB
1/3 HP	B5	ERTFB	EUTFB
1/2 HP	B5	FRTFB	FUTFB
	B5		FUT-SS
	B5		FUTF-IDB
3/4 HP	B5	GRTFB	GUTFB
	B5		GUT-SS
	B5		GUTF-IDB
1 HP	B5	HRTF-5/8B	HUTF5/8B
	B5		HUT5/8-SS
	B5		HUTF5/8-IDB
	B7		HUTFB
	B7		HUT-SS
	B7		HUTF-IDB
1.5 HP	B7		JUTFB
	B7		JUTF-SS
	B7		JUTF-IDB
2 HP	B5		KUTF5/8B
	B7		KUTFB
	B7		KUTF-SS
	B7		KUTF-IDB
3 HP	B9		LUTFB
	B9		LUTF-SS
	B9		LUTF-IDB
5 HP	B9		MUTFB

Other motors available, please see catalog.

T – Totally enclosed non-ventilated
TF – Totally enclosed fan cooled
SS – Stainless
IDB – Inverter Duty (10:1 turn down constant torque)
B5 – 56C
B7 – 140TC
B9 – 180TC

*Example:

Above listed configuration is an example part number using this numbering system.

How to Order

Example:

Required flange input NEMA 56C, and flanged output, 1/3 HP, Class I, 45:1 ratio, lubricated, and standard mounting position.

Order:
1 pc F832BF-45K-B5

G

800 Series In-Line Helical Gear Drives

Interchange Guide



Foot Mounted NEMA C-Face F800B



Foot Mounted 800B



Output Flange Mounted NEMA C-Face F800BF



Output Flange Mounted 800BF

G

Boston Gear 800 Series In-Line Helical Gear Drives are designed to be functionally interchangeable with these and many other manufacturer's drives. This chart is intended to be a guide only. Please see appropriate manufacturer's catalogs for exact details regarding ratings and dimensions.

Manufacturers	Size	Foot Mounted NEMA C-Face F800B	Foot Mounted 800B	Output Flange Mounted NEMA C-Face F800BF	Output Flange Mounted 800BF
Boston	830	F832B/F833B	832B/833B	F832BF/F833BF	832BF/833BF
SEW Eurodrive	32	R32LP	Not Available	RF32LP	Not Available
Dodge (Quantis)	NA	Not Available	Not Available	Not Available	Not Available
Falk	03	03UCBN2(3)-A	03UCBN2(3)-N	03UCFN2(3)-A	03UCFN2(3)-N
David Brown	M03	M032(3)BAN	M032(3)BRN	M032(3)FAN	M032(3)FRN
Flender	E20*	E20 (M, G, OR A)*	E20A*	EF20 (M, G OR A)*	EF20A*
Sumitomo	3090	H (C or M) 3090/95/97	H3090/95/97	HF(C or M) 3090/95/97	HF3090/95/97
Stober	C002	C002N-MR	C002N-AW	C002F-MR	C002F-AW
Nord	02	SK02	SK02-W	SK02F	SK02-W
Boston	840	F842B/F843B	842B/843B	F842BF/F843BF	842BF/843BF
SEW Eurodrive	40	R40LP	R40	RF40LP	RF40
Dodge (Quantis)	38	HB382(3)CN	Not Available	HB382(3)CN	Not Available
Falk	04	04UCBN2(3)-A	04UCBN2(3)-N	04UCFN2(3)-A	04UCFN2(3)-N
David Brown	M04	M042(3)BAN	M042(3)BRN	M042(3)FAN	M042(3)FRN
Flender	30	E30/Z30/D30-(M, G, or A)	E30/Z30/D30	EF30/ZF30/DF30 (M, G or A)	EF30/ZF30/DF30
Sumitomo	3100	H(C or M) 3100/05	H3100/05	HF(C or M) 3100/05	HF3100/05
Stober	C100	C102/3N-MR	C102/3N-AW	C102/3F-MR	C102/3F-AW
Nord	12	SK12(3)	SK12(3)-W	SK12(3)F	SK12(3)F-W
Boston	860	F862B/F863B	862B/863B	F862BF/F863BF	862BF/863BF
SEW Eurodrive	60	R60LP/R63LP	R60/R63	RF60LP/RF63LP	RF60/RF63
Dodge (Quantis)	48	HB482(3)CN	Not Available	HB482(3)CN	Not Available
Falk	06	06UCBN2(3)-A	06UCBN2(3)-N	06UCFN2(3)-A	06UCFN2(3)-N
David Brown	M06	M062(3)BAN	M062(3)BRN	M062(3)FAN	M062(3)FRN
Flender	40	E40/Z40/D40-(M, G or A)	E40/Z40/D40	EF40/ZF40/DF40-(M, G or A)	EF40/ZF40/DF40
Sumitomo	3110	H(C or M) 3110/15	H3110/15	HF(C or M) 3110/15	HF3110/15
Stober	C200	C202/3N-MR	C202/3N-AW	C202/3F-MR	C202/3F-AW
Nord	22	SK22	SK22(3)-W	SK22(3)F	SK22(3)F-W
Boston	870	F872B/F873B	872B/873B	F872BF/F873BF	872BF/873BF
SEW Eurodrive	70	R70LP/R73LP	R70/R73	RF70LP/RF73LP	RF70/RF73
Dodge (Quantis)	68	HB682(3)CN	Not Available	HB682(3)CN	Not Available
Falk	07	07UCBN2(3)-A	07UCBN2(3)-N	07UCFN2(3)-A	07UCFN2(3)-N
David Brown	M07	M072(3)BAN	M072(3)BRN	M072(3)FAN	M072(3)FRN
Flender	60	E60/Z60/D60 - (M,D or A)	E60/Z60/D60	EF60/ZF60/DF60 (M, D or A)	EF60/ZF60/DF60
Sumitomo	3140	H(C or M) 3140/45	H3140/45	HF(C or M) 3140/45	HF3140/45
Stober	C400	C402/3N-MR	C402/3N-AW	C402/3F-MR	C402/3F-AW
Nord	32	SK32(3)	SK32(3)-W	SK32(3)F	SK32(3)F-W

* Single reduction models only.

If you require assistance with an interchange, please contact our customer service department at 1-888-999-9860.

Motorized Gear Drives

1. Determine application service factor from page 154, or from Application Classifications on pages 354-355.
2. Determine output speed required.
3. Determine HP or output torque requirement.
4. Select a speed reducer size based on output speed and horsepower requirement for given service class.
5. Check overhung load calculation.

Example

Select an In-line motorized helical gear drive and motor to drive a uniformly loaded line conveyor 24 hours/day requiring 2 HP at 35 RPM.

POWER REQUIREMENT

230/460 volt
3 phase
60 hertz

1. Select Service Factor Class from page 154. Service Class = II
2. Output RPM = 35
3. 2 HP
4. Select a 2 HP drive that will satisfy minimum of II service class.
5. O.H.L. = 1720 lbs. page 157
6. Order: 1 - F872B-50K-B7 (F01078)
   1 - KUTF Motor Ref - page 345 for specific motor manufacturer.

Both a double and triple reduction gear drive is available. The double reduction will have an economic advantage. The triple reduction should be specified when relative rotation is of concern.

Overhung Load

If the output shaft of a gear drive is connected to the driven machine by other than a flexible coupling, an overhung load is imposed on the shaft. This load may be calculated as follows:

$$OHL = \frac{2\,TK}{D}$$

OHL = Overhung Load (LB.)
T = Shaft Torque (LB.-IN.)
D = Pitch Diameter of Sprocket, Pinion or Pulley (IN.)
K = Load Connection Factor

Load Connection Factor (K)

Sprocket or Timing Belt 1.00
Pinion and Gear Drive 1.25
Pulley and V-Belt Drive 1.50
Pulley and Flat Belt Drive 2.50

An overhung load greater than permissible load value may be reduced to an acceptable value by the use of a sprocket, pinion or pulley of a larger PD. Relocation of the load closer to the center of gear drive will also increase OHL capacity.

Permissible Overhung Loads and Output Shaft Thrust Loads are listed for each reducer in the Tables on Page 157.

G

In-Line Helical Selection Tables

@ 1750 RPM Input

FOR RATINGS AT OTHER INPUT SPEEDS, SEE TABLES ON PAGES 176-185.
ORDER BY CATALOG NUMBER OR ITEM CODE
FOR STANDARD MOUNTING POSITIONS

Approx. Output RPM	Ratio*	Non-Flanged				Flanged (Gearmotors)				
		Gear Capacity		Non-Flange O/P	Output Flange	Ratings			Non-Flange O/P	Output Flange
		Output Torque (LB-IN.)	Input HP	Catalog No. (Item Code)	Catalog No. (Item Code)	Motor HP	Output Torque (LB-IN.)	S.C.**	Catalog No. (Item Code)	Catalog No. (Item Code)
35	50	5216	3.16	872B-50K (F00436)	872BF-50K (F00469)	3	4900	I	F872B-50K-B9 (F01079)	F872BF-50K-B9 (F01125)
						2 1.5	3268 2552	II III	F872B-50K-B7 (F01078)	F872BF-50K-B7 (F01124)
		5290	3.02	873B-50K (F00489)	873BF-50K (F00507)	3	5256	I	F873B-50K-B9 (F01154)	F873BF-50K-B9 (F001182)
						2	3504	II	F873B-50K-B7 (F01153)	F873BF-50K-B7 (F01181)

* Gear Ratio is Approximate. For Actual Gear Ratio Reference Pages 176-185.
** Service Class I (S.F. = 1.00) Service Class II (S.F. = 1.50) Service Class III (S.F. = 2.00)
Overhung Load Ratings refer to Page 157.
Indicates Triple Reduction

800 Series In-Line Helical Gear Drives

To properly select a gear drive, the following application information should be known.

1. Service Factor or AGMA Service class.
2. Output Horsepower or Torque
3. Output RPM or Ratio
   (Maximum Input Speed 4500 RPM)

Consult Engineering for mounting positions: M2, M3, M4, M6, M7, and M9

Non-Motorized Gear Drives

1. Determine application service factor from the service factor chart on this page, or from Application Classifications on pages 354-355.
2. Determine design Horsepower or Torque.
   - Design HP = Application HP x S.F.
   - Design Torque = Application Torque x S.F.
3. Select a Gear drive that satisfies output RPM, service class and/or output torque requirement.
   Reference rating tables pages 176-185.
4. Overhung shaft load should be checked when belt or chain drives are used, to prevent premature shaft or bearing failure. Reference page 157 for calculations.

Example

Select an In-line 800 Series Gear Drive for a continuous duty concrete mixer requiring 700 lb-in. of torque at approx. 1000 RPM, to operate up to 8 hrs/day. The Gear Drive will be driven at 1450 input RPM.

1. Application Service Factor = 1.25
2. Design Torque = 700 x 1.25 = 875 LB-IN.
3. Select at speed and torque level of 875 LB-IN. or greater.
4. Order 862B1.5K.

NOTE: The use of an auxiliary drive between the gear drive and the driven machine reduces the torque required at the output shaft in direct proportion to the auxiliary drive ratio.

A 3:1 chain ratio would reduce the torque requirement at the output shaft of the gear drive to one-third, resulting in a smaller unit size selection.

SERVICE FACTOR CHART

AGMA CLASS OF SERVICE	SERVICE FACTOR	OPERATING CONDITIONS
I	1.00	Moderate Shock-not more than 15 minutes in 2 hours Uniform Load-not more than 10 hours per day.
II	1.25	Moderate Shock-not more than 10 hours per day. Uniform Load-more than 10 hours per day.
	1.50	Heavy Shock-not more than 15 minutes in 2 hours. Moderate Shock-more than 10 hours per day.
III	1.75 2.00	Heavy Shock-not more than 10 hours per day. Heavy Shock-more than 10 hours per day."

For complete AGMA Service Factors and Load Classifications, see Engineering Pages 354-355.

800 Series In-Line Helical Ratings

Non-Flanged; Input Speeds 1750, 1450 and 1160 RPM

Service Factor 1.0

Catalog Number	Input Speed								
	1750 RPM			1450 RPM			1160 RPM		
	Approx. Output RPM	Output Torque (LB-IN)(Max.)	Input HP (Max.)	Approx. Output RPM	Output Torque (LB-IN)(Max.)	Input HP (Max.)	Approx. Output RPM	Output Torque (LB-IN) (Max.)	Input HP (Max.)
832B/BF1.5K	1170	288	5.80	970	293	4.82	773	293	3.85
842B/BF1.5K	1170	479	9.08	970	509	8.00	773	549	6.89
862B/BF1.5K	1170	830	16.20	970	884	14.30	773	950	12.30
872B/BF1.5K	1170	1094	21.20	970	1090	17.50	773	1090	14.00

Foot Mounted Horizontal

STANDARD

M1

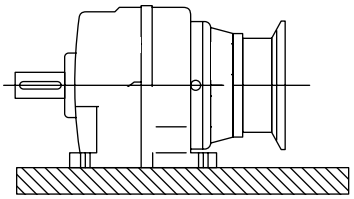

M2

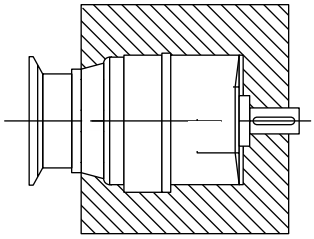

M3

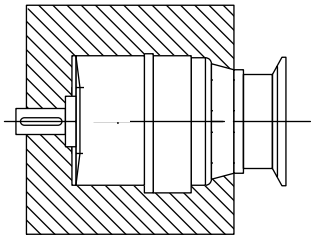

M4

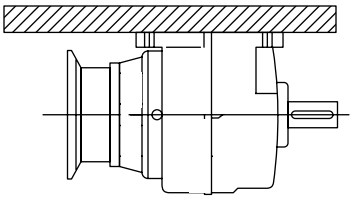

Foot Mounted Vertical

M5

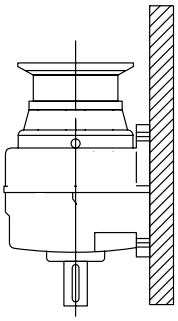

M6

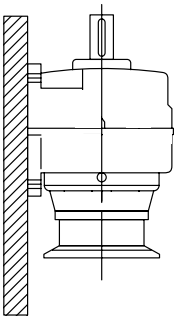

Output Flange Mounted

STANDARD

M7

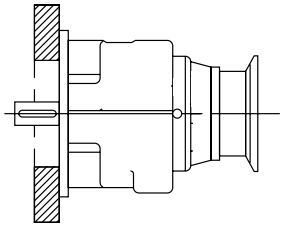

M8

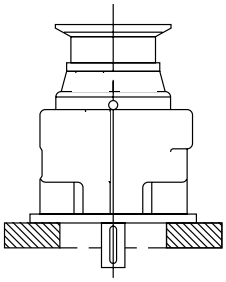

M9

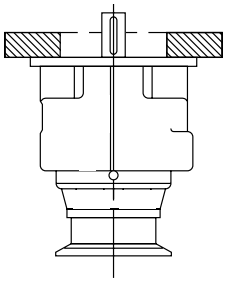

Positions M1 & M8 are standard and will be supplied with oil for this position unless otherwise specified.

CAUTION - Mounting of gear drives in overhead positions may be hazardous. Use of external guides or supports is strongly recommended for overhead mounting.

Avoiding those positions where the high speed oil seal is immersed in oil will provide greater security against high speed input seal wear.

Note: The above drawings will serve to represent both flanged and non-flanged styles

Lubricants

Lubricant and Quantity

Klubersynth Synthetic UH1 6-460 is recommended for the 800 Series gear drives and, at all times, the lubricant must remain free from contamination. Normal operating temperatures range between 150°F - 170°F. During the initial break-in of the gear drive, higher than normal operating temperatures may result.

All gear drives are supplied filled with UH1 6-460 synthetic oil and with the quantity listed below for standard mounting position M1 or M8 or to mounting specified at time of order.

- Sizes 832/833B and 842/843B do not require a vent plug.
- Sizes 862/863B and 872/873B will require an oil change after 20,000 hours of operation. More frequent changes may be required when operating in high temperature ranges or unusually contaminated environments.
- Satisfactory performance may be obtained in some applications with non-synthetic oils and will require more frequent changes.

Recommended Lubricant	Ambient (Room) Temperature	ISO Viscosity Grade No.	Viscosity Range SUS @100°F	Boston Gear Item Code Quart
Klubersynth UH1 6-460	-20° to 225°F (-29° to 107°C)	460	1950/2500	65159
Mobile SHC634	-30° to 225°F (-34° to 107°C)	320 / 460	1950/2500	51493

OIL CAPACITIES (PINTS)

	MOUNTING POSITIONS								
UNIT	M1	M2	M3	M4	M5	M6	M7	M8	M9
SIZE	Foot Mounted						Output Flange Mounted		
832B	1.3	1.3	2.3	1.7	2.1	2.1	1.3	2.0	2.2
833B	2.8	1.7	3.0	2.6	3.6	3.2	1.7	3.0	3.3
842B	1.8	2.0	2.6	2.4	3.0	3.0	2.0	3.4	3.4
843B	3.4	3.0	3.4	3.4	4.4	3.8	3.4	4.8	4.8
862B	4.0	4.6	6.0	7.0	8.0	8.0	4.6	8.6	9.4
863B	9.0	5.8	8.0	8.8	11.0	11.0	5.8	11.0	11.0
872B	8.0	8.6	12.0	12.0	14.4	14.4	8.6	16.4	16.0
873B	16.0	11.0	14.0	14.0	19.0	19.0	11.0	19.0	19.0

Refer to mounting positions on page 155.

Overhung Loads

OVERHUNG LOADS (LBS) & AXIAL THRUST (LBS) CAPACITIES ON OUTPUT SHAFT

OUTPUT RPM	832 / 833 OHL	842 / 843 OHL	862 / 863 OHL	872 / 873 OHL
1000	270	425	715	950
500	300	455	805	1065
350	340	465	830	1065
250	360	485	880	1065
200	385	505	900	1065
150	385	525	945	1090
100	385	620	1010	1275
50	385	770	1360	1720
25 & under	385	770	1600	2090
THRUST	390	635	1200	1580

Overhung loads are calculated at the center of the shaft extension and with no thrust load. For combined loading consult factory.

OVERHUNG LOADS (LBS) ON INPUT SHAFT AT 1750 RPM

SIZE	832	833	842	843	862	863	872	873
OHL	344	390	314	373	310	315	402	371

Overhung loads are calculated at the center of the shaft extension and with no thrust load.

Weights

APPROXIMATE WEIGHTS (LBS)

NON-FLANGE		FLANGE				
			NEMA MOUNTING			
SIZE	LBS	SIZE	56C B5	140TC B7	180TC B9	210TC B11
832B	19	F832B	22	22	25	—
832BF	21	F832BF	24	24	27	—
842B	25	F842B	29	29	32	—
842BF	29	F842BF	33	33	36	—
862B	48	F862B	49	49	63	63
862BF	50	F862BF	51	51	66	66
872B	86	F872B	92	92	99	99
872BF	92	F872BF	99	99	105	105
833B	26	F833B	30	—	—	—
833BF	29	F833BF	32	—	—	—
843B	33	F843B	37	—	—	—
843BF	37	F843BF	41	—	—	—
863B	57	F863B	61	61	—	—
863BF	59	F863BF	63	63	—	—
873B	106	F873B	107	107	121	—
873BF	113	F873BF	114	114	128	—

@ 1750 RPM Input

FOR RATINGS AT OTHER INPUT SPEEDS, SEE TABLES ON PAGES 176-185.
ORDER BY CATALOG NUMBER OR ITEM CODE
FOR STANDARD MOUNTING POSITIONS

Approx. Output RPM	Ratio*	Non-Flanged				Flanged (Gearmotors)				
		Gear Capacity		Non-Flange O/P	Output Flange	Ratings			Non-Flange O/P	Output Flange
		Output Torque (LB-IN.)	Input HP	Catalog No. (Item Code)	Catalog No. (Item Code)	Motor HP	Output Torque (LB-IN.)	S.C.**	Catalog No. (Item Code)	Catalog No. (Item Code)
1170	1.5	288	5.80	832B-1.5K (F00103)	832BF-1.5K-M8 (F00136)	5 3	251 149	I II	F832B-1.5K-B9-M1 (F00591)	F832BF-1.5K-B9-M8 (F00653)
						2	98	III	F832B-1.5K-B7-M1 (F00590)	F832BF-1.5K-B7-M8 (F00652)
		479	9.08	842B-1.5K (F00205)	842BF-1.5K-M8 (F00238)	5 3	248 146	II III	F842B-1.5K-B9-M1 (F00728)	F842BF-1.5K-B9-M8 (F00787)
		830	16.20	862B-1.5K (F00307)	862BF-1.5K-M8 (F00341)	10 7.5	500 380	II III	F862B-1.5K-B11-M1 (F00871)	F862BF-1.5K-B11-M8 (F00935)
		1094	21.20	872B-1.5K (F00411)	872BF-1.5K-M8 (F00444)	10	510	III	F872B-1.5K-B11-M1 (F01044)	F872BF-1.5K-B11-M8 (F01090)
922	1.9	325	4.77	832B-1.9K (F00104)	832BF-1.9K-M8 (F00137)	3	200	II	F832B-1.9K-B9-M1 (F00593)	F832BF-1.9K-B9-M8 (F00655)
						2	133	III	F832B-1.9K-B7-M1 (F00592)	F832BF-1.9K-B7-M8 (F00654)
		643	8.69	842B-1.9K (F00206)	842BF-1.9K-M8 (F00239)	5 3	343 209	II III	F842B-1.9K-B9-M1 (F00729)	F842BF-1.9K-B9-M8 (F00788)
		1100	15.40	862B-1.9K (F00308)	862BF-1.9K-M8 (F00342)	10 7.5	710 535	II III	F862B-1.9K-B11-M1 (F00872)	F862BF-1.9K-B11-M8 (F00936)
		1492	21.20	872B-1.9K (F00412)	872BF-1.9K-M8 (F00445)	10 7.5	695 521	III III	F872B-1.9K-B11-M1 (F01045)	F872BF-1.9K-B11-M8 (F01091)
760	2.3	333	4.29	832B-2.3K (F00111)	832BF-2.3K-M8 (F00144)	3	234	I	F832B-2.3K-B9-M1 (F00604)	F832BF-2.3K-B9-M8 (F00664)
						2	156	III	F832B-2.3K-B7-M1 (F00603)	F832BF-2.3K-B7-M8 (F00663)
		695	8.52	842B-2.3K (F00213)	842BF-2.3K-M8 (F00246)	5 3	378 226	II III	F842B-2.3K-B9-M1 (F00742)	F842BF-2.3K-B9-M8 (F00801)
		1217	15.00	862B-2.3K (F00315)	862BF-2.3K-M8 (F00349)	10 7.5	800 600	II III	F862B-2.3K-B11-M1 (F00884)	F862BF-2.3K-B11-M8 (F00946)
		1680	21.20	872B-2.3K (F00419)	872BF-2.3K-M8 (F00452)	10	780	III	F872B-2.3K-B11-M1 (F01055)	F872BF-2.3K-B11-M8 (F01101)
673 (CONT.)	2.6	350	3.98	832B-2.6K-M1 (F00112)	832BF-2.6K-M8 (F00145)	3	257	I	F832B-2.6K-B9-M1 (F00606)	F832BF-2.6K-B9-M8 (F00666)
						2	171	III	F832B-2.6K-B7-M1 (F00605)	F832BF-2.6K-B7-M8 (F00665)
		715	7.95	842B-2.6K-M1 (F00214)	842BF-2.6K-M8 (F00247)	5 3	416 250	II III	F842B-2.6K-B9-M1 (F00743)	F842BF-2.6K-B9-M8 (F00802)

* Gear Ratio is Approximate. For Actual Gear Ratio Reference Pages 176-185.
** Service Class I (S.F. = 1.00) Service Class II (S.F. = 1.50) Service III (S.F. = 2.00)
Actual Output RPM = Input Speed ÷ Actual Ratio.
For Overhung Load Ratings refer to Page 157.

G

800 Series Output RPM and Capacity Selection Tables

@ 1750 RPM Input

FOR RATINGS AT OTHER INPUT SPEEDS, SEE TABLES ON PAGES 176-185.
ORDER BY CATALOG NUMBER OR ITEM CODE
FOR STANDARD MOUNTING POSITIONS

Approx. Output RPM	Ratio*	Non-Flanged				Flanged (Gearmotors)				
		Gear Capacity		Non-Flange O/P	Output Flange	Ratings			Non-Flange O/P	Output Flange
		Output Torque (LB-IN.)	Input HP	Catalog No. (Item Code)	Catalog No. (Item Code)	Motor HP	Output Torque (LB-IN.)	S.C.**	Catalog No. (Item Code)	Catalog No. (Item Code)
673 (CONT.)	2.6	1320	14.50	862B-2.6K-M1 (F00316)	862BF-2.6K-M8 (F00350)	10 7.5	900 676	II III	F862B-2.6K-B11-M1 (F00885)	F862BF-2.6K-B11-M8 (F00947)
		1800	21.20	872B-2.6K-M1 (F00420)	872BF-2.6K-M8 (F00453)	10	840	III	F872B-2.6K-B11-M1 (F01056)	F872BF-2.6K-B11-M8 (F01102)
605	2.9	533	5.18	832B-2.9K-M1 (F00113)	832BF-2.9K-M8 (F00146)	5 3	508 305	I III	F832B-2.9K-B9-M1 (F00607)	F832BF-2.9K-B9-M8 (F00667)
		840	8.34	842B-2.9K-M1 (F00215)	842BF-2.9K-M8 (F00248)	5 3	500 300	II III	F842B-2.9K-B9-M1 (F00744)	F842BF-2.9K-B9-M8 (F00803)
		1560	15.90	862B-2.9K-M1 (F00317)	862BF-2.9K-M8 (F00351)	10 7.5	972 730	II III	F862B-2.9K-B11-M1 (F00886)	F862BF-2.9K-B11-M8 (F00948)
		2135	21.20	872B-2.9K-M1 (F00421)	872BF-2.9K-M8 (F00454)	10	998	III	F872B-2.9K-B11-M1 (F01057)	F872BF-2.9K-B11-M8 (F01103)
530	3.3	370	3.24	832B-3.3K-M1 (F00118)	832BF-3.3K-M8 (F00151)	3	338	I	F832B-3.3K-B9-M1 (F00615)	F832BF-3.3K-B9-M8 (F00673)
						2 1.5	226 169	II III	F832B-3.3K-B7-M1 (F00613)	F832BF-3.3K-B7-M8 (F00672)
		775	7.03	842B-3.3K-M1 (F00220)	842BF-3.3K-M8 (F00253)	5 3	510 306	I III	F842B-3.3K-B9-M1 (F00757)	F842BF-3.3K-B9-M8 (F00812)
		1550	13.40	862B-3.3K-M1 (F00323)	862BF-3.3K-M8 (F00356)	10 7.5	1145 858	I II	F862B-3.3K-B11-M1 (F00898)	F862BF-3.3K-B11-M8 (F00957)
						5	572	III	F862B-3.3K-B9-M1 (F00899)	F862BF-3.3K-B9-M8 (F00958)
		2398	21.20	872B-3.3K-M1 (F00426)	872BF-3.3K-M8 (F00459)	10	1120	III	F872B-3.3K-B11-M1 (F01064)	F872BF-3.3K-B11-M8 (F01110)
500	3.5	376	3.11	832B-3.5K-M1 (F00119)	832BF-3.5K-M8 (F00152)	3	358	I	F832B-3.5K-B9-M1 (F00617)	F832BF-3.5K-B9-M8 (F00675)
						2 1.5	241 180	II III	F832B-3.5K-B7-M1 (F00616)	F832BF-3.5K-B7-M8 (F00674)
		858	6.46	842B-3.5K-M1 (F00221)	842BF-3.5K-M8 (F00254)	5 3	600 358	I III	F842B-3.5K-B9-M1 (F00758)	F842BF-3.5K-B9-M8 (F00813)
		1665	12.70	862B-3.5K-M1 (F00324)	862BF-3.5K-M8 (F00357)	10 7.5	1298 974	I II	F862B-3.5K-B11-M1 (F00900)	F862BF-3.5K-B11-M8 (F00959)
						5	680	III	F862B-3.5K-B9-M1 (F00901)	F862BF-3.5K-B9-M8 (F00960)
		2704	21.00	872B-3.5K-M1 (F00427)	872BF-3.5K-M8 (F00460)	10	1275	III	F872B-3.5K-B11-M1 (F01065)	F872BF-3.5K-B11-M8 (F01111)

* Gear Ratio is Approximate. For Actual Gear Ratio Reference Pages 176-185.
** Service Class I (S.F. = 1.00) Service Class II (S.F. = 1.50) Service III (S.F. = 2.00)
Actual Output RPM = Input Speed ÷ Actual Ratio.
For Overhung Load Ratings refer to Page 157.

@ 1750 RPM Input

FOR RATINGS AT OTHER INPUT SPEEDS, SEE TABLES ON PAGES 176-185.
ORDER BY CATALOG NUMBER OR ITEM CODE
FOR STANDARD MOUNTING POSITIONS

Approx. Output RPM	Ratio*	Non-Flanged				Flanged (Gearmotors)				
		Gear Capacity		Non-Flange O/P	Output Flange	Ratings			Non-Flange O/P	Output Flange
		Output Torque (LB-IN.)	Input HP	Catalog No. (Item Code)	Catalog No. (Item Code)	Motor HP	Output Torque (LB-IN.)	S.C.**	Catalog No. (Item Code)	Catalog No. (Item Code)
448	3.9	552	3.97	832B-3.9K-M1 (F00120)	832BF-3.9K-M8 (F00153)	3	412	I	F832B-3.9K-B9-M1 (F00619)	F832BF-3.9K-B9-M8 (F00677)
						2	275	III	F832B-3.9K-B7-M1 (F00618)	F832BF-3.9K-B7-M8 (F00676)
		959	6.96	842B-3.9K-M1 (F00222)	842BF-3.9K-M8 (F00255)	5 3	700 420	I III	F842B-3.9K-B9-M1 (F00759)	F842BF-3.9K-B9-M8 (F00814)
		1835	13.30	862B-3.9K-M1 (F00325)	862BF-3.9K-M8 (F00358)	10 7.5	1366 1024	I II	F862B-3.9K-B11-M1 (F00902)	F862BF-3.9K-B11-M8 (F00961)
						5	683	III	F862B-3.9K-B9-M1 (F00903)	F862BF-3.9K-B9-M8 (F00962)
		2902	21.20	872B-3.9K-M1 (F00428)	872BF-3.9K-M8 (F00461)	10	1355	III	F872B-3.9K-B11-M1 (F01066)	F872BF-3.9K-B11-M8 (F01112)
400	4.4	572	3.54	832B-4.4K-M1 (F00123)	832BF-4.4K-M8 (F00156)	3	480	I	F832B-4.4K-B9-M1 (F00625)	F832BF-4.4K-B9-M8 (F00681)
						2 1.5	320 240	II III	F832B-4.4K-B7-M1 (F00624)	F832BF-4.4K-B7-M8 (F00680)
		1000	6.59	842B-4.4K-M1 (F00225)	842BF-4.4K-M8 (F00258)	5 3	773 464	I III	F842B-4.4K-B9-M1 (F00764)	F842BF-4.4K-B9-M8 (F00817)
		1933	12.50	862B-4.4K-M1 (F00328)	862BF-4.4K-M8 (F00361)	10 7.5	1531 1148	I II	F862B-4.4K-B11-M1 (F00909)	F862BF-4.4K-B11-M8 (F00967)
						5	766	III	F862B-4.4K-B9-M1 (F00910)	F862BF-4.4K-B9-M8 (F00968)
		3265	21.20	872B-4.4K-M1 (F00431)	872BF-4.4K-M8 (F00464)	10	1524	III	F872B-4.4K-B11-M1 (F01071)	F872BF-4.4K-B11-M8 (F01117)
340	5.1	592	3.31	832B-5.1K-M1 (F00126)	832BF-5.1K-M8 (F00159)	3	531	I	F832B-5.1K-B9-M1 (F00634)	F832BF-5.1K-B9-M8 (F00686)
						2 1.5	354 266	II III	F832B-5.1K-B7-M1 (F00631)	F832BF-5.1K-B7-M8 (F00684)
		1065	5.96	842B-5.1K-M1 (F00228)	842BF-5.1K-M8 (F00261)	5 3	840 504	I III	F842B-5.1K-B9-M1 (F00769)	F842BF-5.1K-B9-M8 (F00820)
		2042	11.60	862B-5.1K-M1 (F00331)	862BF-5.1K-M8 (F00365)	10 7.5	1742 1306	I II	F862B-5.1K-B11-M1 (F00915)	F862BF-5.1K-B11-M8 (F00973)
						5	870	III	F862B-5.1K-B9-M1 (F00916)	F862BF-5.1K-B9-M8 (F00974)
		3698	21.20	872B-5.1K-M1 (F00434)	872BF-5.1K-M8 (F00467)	10	1726	III	F872B-5.1K-B11-M1 (F01076)	F872BF-5.1K-B11-M8 (F01122)

* Gear Ratio is Approximate. For Actual Gear Ratio Reference Pages 176-185.
** Service Class I (S.F. = 1.00) Service Class II (S.F. = 1.50) Service III (S.F. = 2.00)
Actual Output RPM = Input Speed ÷ Actual Ratio.
For Overhung Load Ratings refer to Page 157.

800 Series Output RPM and Capacity Selection Tables

@ 1750 RPM Input

FOR RATINGS AT OTHER INPUT SPEEDS, SEE TABLES ON PAGES 176-185.
ORDER BY CATALOG NUMBER OR ITEM CODE
FOR STANDARD MOUNTING POSITIONS

Approx. Output RPM	Ratio*	Non-Flanged				Flanged (Gearmotors)				
		Gear Capacity		Non-Flange O/P	Output Flange	Ratings			Non-Flange O/P	Output Flange
		Output Torque (LB-IN.)	Input HP	Catalog No. (Item Code)	Catalog No. (Item Code)	Motor HP	Output Torque (LB-IN.)	S.C.**	Catalog No. (Item Code)	Catalog No. (Item Code)
307	5.7	563	2.91	832B-5.7K-M1 (F00127)	832BF-5.7K-M8 (F00160)	2 1.5	383 287	I II	F832B-5.7K-B7-M1 (F00636)	F832BF-5.7K-B7-M8 (F00688)
						1	191	III	F832B-5.7K-B5-M1 (F00635)	F832BF-5.7K-B5-M8 (F00687)
		1110	5.64	842B-5.7K-M1 (F00229)	842BF-5.7K-M8 (F00262)	5 3	925 555	I II	F842B-5.7K-B9-M1 (F00771)	F842BF-5.7K-B9-M8 (F00822)
						2	370	III	F842B-5.7K-B7-M1 (F00770)	F842BF-5.7K-B7-M8 (F00821)
		2140	10.80	862B-5.7K-M1 (F00332)	862BF-5.7K-M8 (F00366)	10 7.5	1891 1464	I II	F862B-5.7K-B11-M1 (F00918)	F862BF-5.7K-B11-M8 (F00975)
						5	976	III	F862B-5.7K-B9-M1 (F00919)	F862BF-5.7K-B9-M8 (F00976)
		4160	21.20	872B-5.7K-M1 (F00435)	872BF-5.7K-M8 (F00468)	10	1942	III	F872B-5.7K-B11-M1 (F01077)	F872BF-5.7K-B11-M8 (F01123)
273	6.4	588	2.52	832B-6.4K-M1 (F00130)	832BF-6.4K-M8 (F00163)	2 1.5	462 346	I II	F832B-6.4K-B7-M1 (F00642)	F832BF-6.4K-B7-M8 (F00692)
						1	230	III	F832B-6.4K-B5-M1 (F00641)	F832BF-6.4K-B5-M8 (F00691)
		1095	5.34	842B-6.4K-M1 (F00232)	842BF-6.4K-M8 (F00265)	5 3	1014 608	I II	F842B-6.4K-B9-M1 (F00777)	F842BF-6.4K-B9-M8 (F00826)
						2	406	III	F842B-6.4K-B7-M1 (F00776)	F842BF-6.4K-B7-M8 (F00825)
		2248	10.20	862B-6.4K-M1 (F00335)	862BF-6.4K-M8 (F00369)	10 7.5	2182 1636	I II	F862B-6.4K-B11-M1 (F00924)	F862BF-6.4K-B11-M8 (F00980)
						5	1091	III	F862B-6.4K-B9-M1 (F00925)	F862BF-6.4K-B9-M8 (F00981)
		4623	20.90	872B-6.4K-M1 (F00438)	872BF-6.4K-M8 (F00471)	10	2189	III	F872B-6.4K-B11-M1 (F01082)	F872BF-6.4K-B11-M8 (F01128)
246	7.2	576	2.34	832B-7.2K-M1 (F00132)	832BF-7.2K-M8 (F00165)	2 1.5	488 366	I II	F832B-7.2K-B7-M1 (F00646)	F832BF-7.2K-B7-M8 (F00695)
						1	244	III	F832B-7.2K-B5-M1 (F00644)	F832BF-7.2K-B5-M8 (F00694)
		1171	4.88	842B-7.2K-M1 (F00234)	842BF-7.2K-M8 (F00267)	5 3	1171 713	I II	F842B-7.2K-B9-M1 (F00781)	F842BF-7.2K-B9-M8 (F00829)
						2	475	III	F842B-7.2K-B7-M1 (F00780)	F842BF-7.2K-B7-M8 (F00828)
		2380	9.49	862B-7.2K-M1 (F00337)	862BF-7.2K-M8 (F00371)	7.5	1855	I	F862B-7.2K-B11-M1 (F00928)	F862BF-7.2K-B11-M8 (F00984)
						5	1237	III	F862B-7.2K-B9-M1 (F00929)	F862BF-7.2K-B9-M8 (F00985)
		4859	19.30	872B-7.2K-M1 (F00440)	872BF-7.2K-M8 (F00473)	10	2492	III	F872B-7.2K-B11-M1 (F01085)	F872BF-7.2K-B11-M8 (F01131)

* Gear Ratio is Approximate. For Actual Gear Ratio Reference Pages 176-185.
** Service Class I (S.F. = 1.00) Service Class II (S.F. = 1.50) Service III (S.F. = 2.00)
Actual Output RPM = Input Speed ÷ Actual Ratio.
For Overhung Load Ratings refer to Page 157.

800 Series Output RPM and Capacity Selection Tables

@ 1750 RPM Input

FOR RATINGS AT OTHER INPUT SPEEDS, SEE TABLES ON PAGES 176-185.
ORDER BY CATALOG NUMBER OR ITEM CODE
FOR STANDARD MOUNTING POSITIONS

Approx. Output RPM	Ratio*	Non-Flanged				Flanged (Gearmotors)				
		Gear Capacity		Non-Flange O/P	Output Flange	Ratings			Non-Flange O/P	Output Flange
		Output Torque (LB-IN.)	Input HP	Catalog No. (Item Code)	Catalog No. (Item Code)	Motor HP	Output Torque (LB-IN.)	S.C.**	Catalog No. (Item Code)	Catalog No. (Item Code)
218	8	560	2.01	832B-8K-M1 (F00134)	832BF-8K-M8 (F00167)	2 1.5	560 415	I II	F832B-8K-B7-M1 (F00649)	F832BF-8K-B7-M8 (F00698)
						1	276	III	F832B-8K-B5-M1 (F00648)	F832BF-8K-B5-M8 (F00697)
		1206	4.54	842B-8K-M1 (F00236)	842BF-8K-M8 (F00269)	3	797	I	F842B-8K-B9-M1 (F00784)	F842BF-8K-B9-M8 (F00832)
						2	526	III	F842B-8K-B7-M1 (F00783)	F842BF-8K-B7-M8 (F00831)
		2480	8.82	862B-8K-M1 (F00339)	862BF-8K-M8 (F00373)	7.5	2087	I	F862B-8K-B11-M1 (F00931)	F862BF-8K-B11-M8 (F00987)
						5 3	1391 835	II III	F862B-8K-B9-M1 (F00932)	F862BF-8K-B9-M8 (F00988)
		5074	18.00	872B-8K-M1 (F00442)	872BF-8K-M8 (F00475)	10 7.5	2790 2092	II III	F872B-8K-B11-M1 (F01088)	F872BF-8K-B11-M8 (F01134)
194	9	636	1.86	832B-9K-M1 (F00135)	832BF-9K-M8 (F00168)	1.5	508	I	F832B-9K-B7-M1 (F00651)	F832BF-9K-B7-M8 (F00700)
						1 .75	338 253	II III	F832B-9K-B5-M1 (F00650)	F832BF-9K-B5-M8 (F00699)
		1275	4.14	842B-9K-M1 (F00237)	842BF-9K-M8 (F00270)	3	924	I	F842B-9K-B9-M1 (F00786)	F842BF-9K-B9-M8 (F00834)
						2	616	III	F842B-9K-B7-M1 (F00785)	F842BF-9K-B7-M8 (F00833)
		2608	8.18	862B-9K-M1 (F00340)	862BF-9K-M8 (F00374)	7.5	2366	I	F862B-9K-B11-M1 (F00933)	F862BF-9K-B11-M8 (F00989)
						5 3	1577 946	II III	F862B-9K-B9-M1 (F00934)	F862BF-9K-B9-M8 (F00990)
		5358	16.70	872B-9K-M1 (F00443)	872BF-9K-M8 (F00476)	10 7.5	3175 2381	II III	F872B-9K-B11-M1 (F01089)	F872BF-9K-B11-M8 (F01135)
175	10	576	1.63	832B-10K-M1 (F00105)	832BF-10K-M8 (F00138)	1.5	524	I	F832B-10K-B7-M1 (F00595)	F832BF-10K-B7-M8 (F00657)
						1 .75	349 262	II III	F832B-10K-B5-M1 (F00594)	F832BF-10K-B5-M8 (F00656)
		1295	3.82	842B-10K-M1 (F00207)	842BF-10K-M8 (F00240)	3	1006	I	F842B-10K-B9-M1 (F00732)	F842BF-10K-B9-M8 (F00791)
						2 1.5	670 503	II III	F842B-10K-B7-M1 (F00730)	F842BF-10K-B7-M8 (F00790)
		2600	7.56	862B-10K-M1 (F00309)	862BF-10K-M8 (F00343)	7.5	2548	I	F862B-10K-B11-M1 (F00873)	F862BF-10K-B11-M8 (F00937)
						5 3	1700 1019	II III	F862B-10K-B9-M1 (F00874)	F862BF-10K-B9-M8 (F00938)
		5360	15.70	872B-10K-M1 (F00413)	872BF-10K-M8 (F00446)	10 7.5	3278 2458	II III	F872B-10K-B11-M1 (F01046)	F872BF-10K-B11-M8 (F01092)

* Gear Ratio is Approximate. For Actual Gear Ratio Reference Pages 176-185.
** Service Class I (S.F. = 1.00) Service Class II (S.F. = 1.50) Service III (S.F. = 2.00)
Actual Output RPM = Input Speed ÷ Actual Ratio.
For Overhung Load Ratings refer to Page 157.

G

800 Series Output RPM and Capacity Selection Tables

@ 1750 RPM Input

FOR RATINGS AT OTHER INPUT SPEEDS, SEE TABLES ON PAGES 176-185.
ORDER BY CATALOG NUMBER OR ITEM CODE
FOR STANDARD MOUNTING POSITIONS

Approx. Output RPM	Ratio*	Non-Flanged				Flanged (Gearmotors)				
		Gear Capacity		Non-Flange O/P	Output Flange	Ratings			Non-Flange O/P	Output Flange
		Output Torque (LB-IN.)	Input HP	Catalog No. (Item Code)	Catalog No. (Item Code)	Motor HP	Output Torque (LB-IN.)	S.C.**	Catalog No. (Item Code)	Catalog No. (Item Code)
159	11	576	1.43	832B-11K-M1 (F00106)	832BF-11K-M8 (F00139)	1 .75 .50	400 300 200	I II III	F832B-11K-B5-M1 (F00596)	F832BF-11K-B5-M8 (F00658)
		1330	3.45	842B-11K-M1 (F00208)	842BF-11K-M8 (F00241)	3	1144	I	F842B-11K-B9-M1 (F00734)	F842BF-11K-B9-M8 (F00793)
						2 1.5	827 572	II III	F842B-11K-B7-M1 (F00733)	F842BF-11K-B7-M8 (F00792)
		2680	6.70	862B-11K-M1 (F00310)	862BF-11K-M8 (F00344)	5 3	1975 1186	I III	F862B-11K-B9-M1 (F00875)	F862BF-11K-B9-M8 (F00939)
		5291	13.70	872B-11K-M1 (F00414)	872BF-11K-M8 (F00447)	10 7.5	3822 2866	I II	F872B-11K-B11-M1 (F01047)	F872BF-11K-B11-M8 (F01093)
145	12	550	1.30	832B-12K-M1 (F00107)	832BF-12K-M8 (F00140)	1 .75 .50	418 314 210	I II III	F832B-12K-B5-M1 (F00597)	F832BF-12K-B5-M8 (F00659)
		1419	3.23	842B-12K-M1 (F00209)	842BF-12K-M8 (F00242)	3	1304	I	F842B-12K-B9-M1 (F00736)	F842BF-12K-B9-M8 (F00795)
						2 1.5	870 652	II III	F842B-12K-B7-M1 (F00735)	F842BF-12K-B7-M8 (F00794)
		2840	6.49	862B-12K-M1 (F00311)	862BF-12K-M8 (F00345)	5 3	2167 1300	I III	F862B-12K-B9-M1 (F00876)	F862BF-12K-B9-M8 (F00940)
		5439	12.50	872B-12K-M1 (F00415)	872BF-12K-M8 (F00448)	10 7.5	4177 3132	I II	F872B-12K-B11-M1 (F01048)	F872BF-12K-B11-M8 (F01094)
125	14	550	1.14	832B-14K-M1 (F00108)	832BF-14K-M8 (F00141)	1 .75 .50	478 358 239	I II III	F832B-14K-B5-M1 (F00598)	F832BF-14K-B5-M8 (F00660)
		1443	2.89	842B-14K-M1 (F00210)	842BF-14K-M8 (F00243)	2 1.5	988 741	II III	F842B-14K-B7-M1 (F00737)	F842BF-14K-B7-M8 (F00796)
		2910	5.72	862B-14K-M1 (F00312)	862BF-14K-M8 (F00346)	5 3	2519 1512	I III	F862B-14K-B9-M1 (F00877)	F862BF-14K-B9-M8 (F00941)
		5364	10.90	872B-14K-M1 (F00416)	872BF-14K-M8 (F00449)	10 7.5	4870 3653	I II	F872B-14K-B11-M1 (F01049)	F872BF-14K-B11-M8 (F01095)
						5	2435	III	F872B-14K-B9-M1 (F01050)	F872BF-14K-B9-M8 (F01096)

* Gear Ratio is Approximate. For Actual Gear Ratio Reference Pages 176-185.
** Service Class I (S.F. = 1.00) Service Class II (S.F. = 1.50) Service III (S.F. = 2.00)
Actual Output RPM = Input Speed ÷ Actual Ratio.
For Overhung Load Ratings refer to Page 157.

@ 1750 RPM Input

FOR RATINGS AT OTHER INPUT SPEEDS, SEE TABLES ON PAGES 176-185.
ORDER BY CATALOG NUMBER OR ITEM CODE
FOR STANDARD MOUNTING POSITIONS

Approx. Output RPM	Ratio*	Non-Flanged				Flanged (Gearmotors)				
		Gear Capacity		Non-Flange O/P	Output Flange	Ratings			Non-Flange O/P	Output Flange
		Output Torque (LB-IN.)	Input HP	Catalog No. (Item Code)	Catalog No. (Item Code)	Motor HP	Output Torque (LB-IN.)	S.C.**	Catalog No. (Item Code)	Catalog No. (Item Code)
109	16	576	1.06	832B-16K-M1 (F00109)	832BF-16K-M8 (F00142)	1 .75 .50	539 404 270	I II III	F832B-16K-B5-M1 (F00599)	F832BF-16K-B5-M8 (F00661)
		1380	2.49	842B-16K-M1 (F00211)	842BF-16K-M8 (F00244)	2 1.5	1097 823	II II	F842B-16K-B7-M1 (F00739)	F842BF-16K-B7-M8 (F00798)
						1	548	III	F842B-16K-B5-M1 (F00738)	F842BF-16K-B5-M8 (F00797)
		2900	5.12	862B-16K-M1 (F00313)	862BF-16K-M8 (F00347)	5 3	2792 1675	I II	F862B-16K-B9-M1 (F00881)	F862BF-16K-B9-M8 (F00943)
						2	1117	III	F862B-16K-B7-M1 (F00880)	F862BF-16K-B7-M8 (F00942)
		5245	9.60	872B-16K-M1 (F00417)	872BF-16K-M8 (F00450)	7.5	4055	I	F872B-16K-B11-M1 (F01051)	F872BF-16K-B11-M8 (F01097)
						5 3	2703 1639	II III	F872B-16K-B9-M1 (F01052)	F872BF-16K-B9-M8 (F01098)
97	18	590	0.91	832B-18K-M1 (F00110)	832BF-18K-M8 (F00143)	.75 .50 .33	483 322 210	I II III	F832B-18K-B5-M1 (F00600)	F832BF-18K-B5-M8 (F00662)
		1420	2.35	842B-18K-M1 (F00212)	842BF-18K-M8 (F00245)	2 1.5	1192 894	I II	F842B-18K-B7-M1 (F00741)	F842BF-18K-B7-M8 (F00800)
						1	596	III	F842B-18K-B5-M1 (F00740)	F842BF-18K-B5-M8 (F00799)
		2940	4.88	862B-18K-M1 (F00314)	862BF-18K-M8 (F00348)	3	1788	II	F862B-18K-B9-M1 (F00883)	F862BF-18K-B9-M8 (F00945)
						2	1192	III	F862B-18K-B7-M1 (F00882)	F862BF-18K-B7-M8 (F00944)
		5320	8.50	872B-18K-M1 (F00418)	872BF-18K-M8 (F00451)	7.5	4645	I	F872B-18K-B11-M1 (F01053)	F872BF-18K-B11-M8 (F01099)
						5 3	3096 1858	II III	F872B-18K-B9-M1 (F01054)	F872BF-18K-B9-M8 (F01100)
87 (CONT.)	20	590	0.85	832B-20K-M1 (F00114)	832BF-20K-M8 (F00147)	.75 .50 .33	526 350 232	I II III	F832B-20K-B5-M1 (F00608)	F832BF-20K-B5-M8 (F00668)
		1442	2.01	842B-20K-M1 (F00216)	842BF-20K-M8 (F00249)	2 1.5	1420 1065	I II	F842B-20K-B7-M1 (F00748)	F842BF-20K-B7-M8 (F00805)
						.75	533	III	F842B-20K-B5-M1 (F00745)	F842BF-20K-B5-M8 (F00804)

* Gear Ratio is Approximate. For Actual Gear Ratio Reference Pages 176-185.
** Service Class I (S.F. = 1.00) Service Class II (S.F. = 1.50) Service III (S.F. = 2.00)
Actual Output RPM = Input Speed ÷ Actual Ratio.
For Overhung Load Ratings refer to Page 157.

800 Series Output RPM and Capacity Selection Tables

@ 1750 RPM Input

FOR RATINGS AT OTHER INPUT SPEEDS, SEE TABLES ON PAGES 176-185.
ORDER BY CATALOG NUMBER OR ITEM CODE
FOR STANDARD MOUNTING POSITIONS

Approx. Output RPM	Ratio*	Non-Flanged				Flanged (Gearmotors)				
		Gear Capacity		Non-Flange O/P	Output Flange	Ratings			Non-Flange O/P	Output Flange
		Output Torque (LB-IN.)	Input HP	Catalog No. (Item Code)	Catalog No. (Item Code)	Motor HP	Output Torque (LB-IN.)	S.C.**	Catalog No. (Item Code)	Catalog No. (Item Code)
87 (CONT.)	20	3014	4.19	862B-20K-M1 (F00318)	862BF-20K-M8 (F00352)	3	2137	I	F862B-20K-B9-M1 (F00888)	F862BF-20K-B9-M8 (F00950)
						2	1425	III	F862B-20K-B7-M1 (F00887)	F862BF-20K-B7-M8 (F00949)
		5319	7.64	872B-20K-M1 (F00422)	872BF-20K-M8 (F00455)	7.5	5319	I	F872B-20K-B11-M1 (F01058)	F872BF-20K-B11-M8 (F01104)
						5 3	3444 2066	II III	F872B-20K-B9-M1 (F01059)	F872BF-20K-B9-M8 (F01105)
79	22	574	0.72	832B-22K-M1 (F00115)	832BF-22K-M8 (F00148)	.75 .50 .33	574 395 260	I II III	F832B-22K-B5-M1 (F00610)	F832BF-22K-B5-M8 (F00669)
		1443	1.85	842B-22K-M1 (F00217)	842BF-22K-M8 (F00250)	1.5	1158	I	F842B-22K-B7-M1 (F00751)	F842BF-22K-B7-M8 (F00807)
						1 .75	772 579	II III	F842B-22K-B5-M1 (F00750)	F842BF-22K-B5-M8 (F00806)
		3030	3.95	862B-22K-M1 (F00319)	862BF-22K-M8 (F00353)	3	2281	I	F862B-22K-B9-M1 (F00891)	F862BF-22K-B9-M8 (F00952)
						2	1520	III	F862B-22K-B7-M1 (F00889)	F862BF-22K-B7-M8 (F00951)
		5398	6.77	872B-22K-M1 (F00423)	872BF-22K-M8 (F00456)	5 3	3946 2367	I III	F872B-22K-B9-M1 (F01060)	F872BF-22K-B9-M8 (F01106)
70	25	580	0.65	832B-25K-M1 (F00116)	832BF-25K-M8 (F00149)	.50 .33	442 294	I III	F832B-25K-B5-M1 (F00611)	F832BF-25K-B5-M8 (F00670)
		1312	1.64	842B-25K-M1 (F00218)	842BF-25K-M8 (F00251)	1.5	1187	I	F842B-25K-B7-M1 (F00753)	F842BF-25K-B7-M8 (F00809)
						1 .75	791 593	II III	F842B-25K-B5-M1 (F00752)	F842BF-25K-B5-M8 (F00808)
		3070	3.49	862B-25K-M1 (F00320)	862BF-25K-M8 (F00354)	3	2618	I	F862B-25K-B9-M1 (F00893)	F862BF-25K-B9-M8 (F00954)
						2 1.5	1745 1309	II III	F862B-25K-B7-M1 (F00892)	F862BF-25K-B7-M8 (F00953)
		5279	6.17	872B-25K-M1 (F00424)	872BF-25K-M8 (F00457)	5 3	4236 2540	I III	F872B-25K-B9-M1 (F01061)	F872BF-25K-B9-M8 (F01107)
62 (CONT.)	28	580	0.59	832B-28K-M1 (F00117)	832BF-28K-M8 (F00150)	.50 .33 .25	491 327 245	I II III	F832B-28K-B5-M1 (F00612)	F832BF-28K-B5-M8 (F00671)

* Gear Ratio is Approximate. For Actual Gear Ratio Reference Pages 176-185.
** Service Class I (S.F. = 1.00) Service Class II (S.F. = 1.50) Service III (S.F. = 2.00)
Actual Output RPM = Input Speed ÷ Actual Ratio.
For Overhung Load Ratings refer to Page 157.

@ 1750 RPM Input

FOR RATINGS AT OTHER INPUT SPEEDS, SEE TABLES ON PAGES 176-185.
ORDER BY CATALOG NUMBER OR ITEM CODE
FOR STANDARD MOUNTING POSITIONS

Approx. Output RPM	Ratio*	Non-Flanged				Flanged (Gearmotors)				
		Gear Capacity		Non-Flange O/P	Output Flange	Ratings			Non-Flange O/P	Output Flange
		Output Torque (LB-IN.)	Input HP	Catalog No. (Item Code)	Catalog No. (Item Code)	Motor HP	Output Torque (LB-IN.)	S.C.**	Catalog No. (Item Code)	Catalog No. (Item Code)
62 (CONT.)	28	1467	1.46	842B-28K-M1 (F00219)	842BF-28K-M8 F00252)	1.5	1467	I	F842B-28K-B7-M1 (F00755)	F842BF-28K-B7-M8 (F00811)
						1 .75	994 746	II III	F842B-28K-B5-M1 (F00754)	F842BF-28K-B5-M8 (F00810)
		3070	3.19	862B-28K-M1 (F00321)	862BF-28K-M8 (F00355)	3	2867	I	F862B-28K-B9-M1 (F00896)	F862BF-28K-B9-M8 (F00956)
						2 1.5	1910 1433	II III	F862B-28K-B7-M1 (F00895)	F862BF-28K-B7-M8 (F00955)
		5287	5.64	872B-28K-M1 (F00425)	872BF-28K-M8 (F00458)	5 3	4639 2783	I II	F872B-28K-B9-M1 (F01063)	F872BF-28K-B9-M8 (F01109)
						2	1855	III	F872B-28K-B7-M1 (F01062)	F872BF-28K-B7-M8 (F01108)
54	32	555	0.52	832B-32K-M1 (F00121)	832BF-32K-M8 (F00154)	.50 .33 .25	528 370 264	I II III	F832B-32K-B5-M1 (F00620)	F832BF-32K-B5-M8 (F00678)
		1338	1.29	842B-32K-M1 (F00223)	842BF-32K-M8 (F00256)	1 .75 .50	1026 770 513	I II III	F842B-32K-B5-M1 (F00760)	F842BF-32K-B5-M8 (F00815)
		3120	2.79	862B-32K-M1 (F00326)	862BF-32K-M8 (F00359)	2 1.5	2225 1669	II II	F862B-32K-B7-M1 (F00905)	F862BF-32K-B7-M8 (F00964)
						1	1159	III	F862B-32K-B5-M1 (F00904)	F862BF-32K-B5-M8 (F00963)
		5342	4.90	872B-32K-M1 (F00429)	872BF-32K-M8 (F00462)	5 3	5342 3236	I II	F872B-32K-B9-M1 (F01068)	F872BF-32K-B9-M8 (F01114)
						2	2158	III	F872B-32K-B7-M1 (F01067)	F872BF-32K-B7-M8 (F01113)
48 (CONT.)	36	557	0.47	832B-36K-M1 (F00122)	832BF-36K-M8 (F00155)	.50 .33 .25 .16	557 391 294 196	I I II III	F832B-36K-B5-M1 (F00622)	F832BF-36K-B5-M8 (F00679)
		562	0.47	833B-36K-M1 (F00178)	833BF-36K-M8 (F00196)	.50 .33 .25 .16	562 400 299 200	I I II III	F833B-36K-B5-M1 (F00705)	F833BF-36K-B5-M8 (F00718)
		1457	1.15	842B-36K-M1 (F00224)	842BF-36K-M8 (F00257)	1 .75 .50	1254 940 627	I II III	F842B-36K-B5-M1 (F00763)	F842BF-36K-B5-M8 (F00816)

* Gear Ratio is Approximate. For Actual Gear Ratio Reference Pages 176-185.
** Service Class I (S.F. = 1.00) Service Class II (S.F. = 1.50) Service III (S.F. = 2.00)
Actual Output RPM = Input Speed ÷ Actual Ratio.
For Overhung Load Ratings refer to Page 157.
▭ Indicates Triple Reduction

G

800 Series Output RPM and Capacity Selection Tables

@ 1750 RPM Input

FOR RATINGS AT OTHER INPUT SPEEDS, SEE TABLES ON PAGES 176-185.
ORDER BY CATALOG NUMBER OR ITEM CODE
FOR STANDARD MOUNTING POSITIONS

Approx. Output RPM	Ratio*	Non-Flanged				Flanged (Gearmotors)				
		Gear Capacity		Non-Flange O/P	Output Flange	Ratings			Non-Flange O/P	Output Flange
		Output Torque (LB-IN.)	Input HP	Catalog No. (Item Code)	Catalog No. (Item Code)	Motor HP	Output Torque (LB-IN.)	S.C.**	Catalog No. (Item Code)	Catalog No. (Item Code)
48 (CONT.)	36	1390	1.17	843B-36K-M1 (F00280)	843BF-36K-M8 (F00298)	1 .75 .50	1190 893 595	I II III	F843B-36K-B5-M1 (F00844)	F843BF-36K-B5-M8 (F00862)
		3120	2.55	862B-36K-M1 (F00327)	862BF-36K-M8 (F00360)	2 1.5	2436 1827	I II	F862B-36K-B7-M1 (F00908)	F862BF-36K-B7-M8 (F00966)
						1	1218	III	F862B-36K-B5-M1 (F00907)	F862BF-36K-B5-M8 (F00965)
		2978	2.51	863B-36K-M1 (F00384)	863BF-36K-M8 (F00402)	2 1.5	2372 1779	I II	F863B-36K-B7-M1 (F01001)	F863BF-36K-B7-M8 (F01025)
						1	1186	III	F863B-36K-B5-M1 (F01000)	F863BF-36K-B5-M8 (F01024)
		5296	4.48	872B-36K-M1 (F00430)	872BF-36K-M8 (F00463)	5 3	5296 3546	I II	F872B-36K-B9-M1 (F01070)	F872BF-36K-B9-M8 (F01116)
						2	2364	III	F872B-36K-B7-M1 (F01069)	F872BF-36K-B7-M8 (F01115)
		5225	4.42	873B-36K-M1 (F00486)	873BF-36K-M8 (F00504)	5 3	5225 3546	I II	F873B-36K-B9-M1 (F01148)	F873BF-36K-B9-M8 (F01176)
						2	2364	III	F873B-36K-B7-M1 (F01147)	F873BF-36K-B7-M8 (F01175)
43 (CONT.)	40	466	0.36	832B-40K-M1 (F00124)	832BF-40K-M8 (F00157)	.33 .25 .16	431 323 216	I I III	F832B-40K-B5-M1 (F00626)	F832BF-40K-B5-M8 (F00682)
		560	0.41	833B-40K-M1 (F00179)	833BF-40K-M8 (F00197)	.33 .25 .16	456 342 228	I II III	F833B-40K-B5-M1 (F00706)	F833BF-40K-B5-M8 (F00719)
		1375	1.00	842B-40K-M1 (F00226)	842BF-40K-M8 (F00259)	1 .75 .50	1254 940 627	I II III	F842B-40K-B5-M1 (F00765)	F842BF-40K-B5-M8 (F00818)
		1390	1.02	843B-40K-M1 (F00281)	843BF-40K-M8 (F00299)	1 .75 .50	1360 1020 680	I I III	F843B-40K-B5-M1 (F00845)	F843BF-40K-B5-M8 (F00863)
		2992	2.18	862B-40K-M1 (F00329)	862BF-40K-M8 (F00362)	2 1.5	2678 2008	I II	F862B-40K-B7-M1 (F00912)	F862BF-40K-B7-M8 (F00970)
						1	1339	III	F862B-40K-B5-M1 (F00911)	F862BF-40K-B5-M8 (F00969)
		2978	2.21	863B-40K-M1 (F00385)	863BF-40K-M8 (F00403)	2 1.5	2695 2022	I II	F863B-40K-B7-M1 (F01003)	F863BF-40K-B7-M8 (F01027)
						1	1348	III	F863B-40K-B5-M1 (F01002)	F863BF-40K-B5-M8 (F01026)

* Gear Ratio is Approximate. For Actual Gear Ratio Reference Pages 176-185.
** Service Class I (S.F. = 1.00) Service Class II (S.F. = 1.50) Service III (S.F. = 2.00)
Actual Output RPM = Input Speed ÷ Actual Ratio.
For Overhung Load Ratings refer to Page 157.
▭ Indicates Triple Reduction

@ 1750 RPM Input

FOR RATINGS AT OTHER INPUT SPEEDS, SEE TABLES ON PAGES 176-185.
ORDER BY CATALOG NUMBER OR ITEM CODE
FOR STANDARD MOUNTING POSITIONS

Approx. Output RPM	Ratio*	Non-Flanged				Flanged (Gearmotors)				
		Gear Capacity		Non-Flange O/P	Output Flange	Ratings			Non-Flange O/P	Output Flange
		Output Torque (LB-IN.)	Input HP	Catalog No. (Item Code)	Catalog No. (Item Code)	Motor HP	Output Torque (LB-IN.)	S.C.**	Catalog No. (Item Code)	Catalog No. (Item Code)
43 (CONT.)	40	5050	3.83	872B-40K-M1 (F00432)	872BF-40K-M8 (F00465)	3	3955	I	F872B-40K-B9-M1 (F01073)	F872BF-40K-B9-M8 (F01119)
						2	2636	III	F872B-40K-B7-M1 (F01072)	F872BF-40K-B7-M8 (F01118)
		5225	3.80	873B-40K-M1 (F00487)	873BF-40K-M8 (F00505)	3	4125	I	F873B-40K-B9-M1 (F01150)	F873BF-40K-B9-M8 (F01178)
						2	2750	II	F873B-40K-B7-M1 (F01149)	F873BF-40K-B7-M8 (F01177)
38	45	480	0.33	832B-45K-M1 (F00125)	832BF-45K-M8 (F00158)	.33 .25 .16	480 359 239	I I III	F832B-45K-B5-M1 (F00628)	F832BF-45K-B5-M8 (F00683)
		544	0.38	833B-45K-M1 (F00180)	833BF-45K-M8 (F00198)	.33 .25 .16	478 358 239	I I III	F833B-45K-B5-M1 (F00707)	F833BF-45K-B5-M8 (F00720)
		1410	0.90	842B-45K-M1 (F00227)	842BF-45K-M8 (F00260)	.75 .50 .33	1180 788 525	I II III	F842B-45K-B5-M1 (F00767)	F842BF-45K-B5-M8 (F00819)
		1420	0.92	843B-45K-M1 (F00282)	843BF-45K-M8 (F00300)	.75 .50 .33	1158 772 515	I II III	F843B-45K-B5-M1 (F00846)	F843BF-45K-B5-M8 (F00864)
		2950	2.01	862B-45K-M1 (F00330)	862BF-45K-M8 (F00364)	2 1.5	2932 2199	I I	F862B-45K-B7-M1 (F00914)	F862BF-45K-B7-M8 (F00972)
						1	1466	III	F862B-45K-B5-M1 (F00913)	F862BF-45K-B5-M8 (F00971)
		3040	2.01	863B-45K-M1 (F00386)	863BF-45K-M8 (F00404)	2 1.5	3025 2269	I I	F863B-45K-B7-M1 (F01005)	F863BF-45K-B7-M8 (F01029)
						1	1512	III	F863B-45K-B5-M1 (F01004)	F863BF-45K-B5-M8 (F01028)
		5167	3.54	872B-45K-M1 (F00433)	872BF-45K-M8 (F00466)	3	4334	I	F872B-45K-B9-M1 (F01075)	F872BF-45K-B9-M8 (F01121)
						2 1.5	3010 2167	II III	F872B-45K-B7-M1 (F01074)	F872BF-45K-B7-M8 (F01120)
		5300	3.52	873B-45K-M1 (F00488)	873BF-45K-M8 (F00506)	3	4526	I	F873B-45K-B9-M1 (F01152)	F873BF-45K-B9-M8 (F01180)
						2 1.5	3013 2404	II III	F873B-45K-B7-M1 (F01151)	F873BF-45K-B7-M8 (F01179)
35 (CONT.)	50	555	0.34	832B-50K-M1 (F00128)	832BF-50K-M8 (F00161)	.33 .25 .16	540 405 270	I I III	F832B-50K-B5-M1 (F00637)	F832BF-50K-B5-M8 (F00689)

* Gear Ratio is Approximate. For Actual Gear Ratio Reference Pages 176-185.
** Service Class I (S.F. = 1.00) Service Class II (S.F. = 1.50) Service III (S.F. = 2.00)
Actual Output RPM = Input Speed ÷ Actual Ratio.
For Overhung Load Ratings refer to Page 157.
▭ Indicates Triple Reduction

G

800 Series Output RPM and Capacity Selection Tables

@ 1750 RPM Input

FOR RATINGS AT OTHER INPUT SPEEDS, SEE TABLES ON PAGES 176-185.
ORDER BY CATALOG NUMBER OR ITEM CODE
FOR STANDARD MOUNTING POSITIONS

Approx. Output RPM	Ratio*	Non-Flanged				Flanged (Gearmotors)				
		Gear Capacity		Non-Flange O/P	Output Flange	Ratings			Non-Flange O/P	Output Flange
		Output Torque (LB-IN.)	Input HP	Catalog No. (Item Code)	Catalog No. (Item Code)	Motor HP	Output Torque (LB-IN.)	S.C.**	Catalog No. (Item Code)	Catalog No. (Item Code)
35 (CONT.)	50	540	0.33	833B-50K-M1 (F00181)	833BF-50K-M8 (F00199)	.33 .25 .16	540 409 273	I I III	F833B-50K-B5-M1 (F00708)	F833BF-50K-B5-M8 (F00721)
		1500	0.87	842B-50K-M1 (F00230)	842BF-50K-M8 (F00263)	.75 .50 .33	1280 854 592	I II III	F842B-50K-B5-M1 (F00772)	F842BF-50K-B5-M8 (F00823)
		1429	0.81	843B-50K-M1 (F00283)	843BF-50K-M8 (F00301)	.75 .50 .33	1323 882 588	I II III	F843B-50K-B5-M1 (F00847)	F843BF-50K-B5-M8 (F00865)
		3150	1.86	862B-50K-M1 (F00333)	862BF-50K-M8 (F00367)	1.5	2514	I	F862B-50K-B7-M1 (F00921)	F862BF-50K-B7-M8 (F00978)
						1 .75	1676 1257	II III	F862B-50K-B5-M1 (F00920)	F862BF-50K-B5-M8 (F00977)
		3040	1.77	863B-50K-M1 (F00387)	863BF-50K-M8 (F00405)	1.5	2578	I	F863B-50K-B7-M1 (F01007)	F863BF-50K-B7-M8 (F01031)
						1 .75	1718 1289	II III	F863B-50K-B5-M1 (F01006)	F863BF-50K-B5-M8 (F01030)
		5216	3.16	872B-50K-M1 (F00436)	872BF-50K-M8 (F00469)	3	4900	I	F872B-50K-B9-M1 (F01079)	F872BF-50K-B9-M8 (F01125)
						2 1.5	3268 2552	II III	F872B-50K-B7-M1 (F01078)	F872BF-50K-B7-M8 (F01124)
		5290	3.02	873B-50K-M1 (F00489)	873BF-50K-M8 (F00507)	3	5256	I	F873B-50K-B9-M1 (F01154)	F873BF-50K-B9-M8 (F01182)
						2 1.5	3504 2628	II II	F873B-50K-B7-M1 (F01153)	F873BF-50K-B7-M8 (F01181)
31 (CONT.)	56	540	0.29	832B-56K-M1 (F00129)	832BF-56K-M8 (F00162)	.25 .16	460 308	I II	F832B-56K-B5-M1 (F00639)	F832BF-56K-B5-M8 (F00690)
		554	0.30	833B-56K-M1 (F00182)	833BF-56K-M8 (F00200)	.25 .16	462 308	I II	F833B-56K-B5-M1 (F00709)	F833BF-56K-B5-M8 (F00722)
		1392	0.71	842B-56K-M1 (F00231)	842BF-56K-M8 (F00264)	.5 .33	970 647	I III	F842B-56K-B5-M1 (F00775)	F842BF-56K-B5-M8 (F00824)
		1396	0.76	843B-56K-M1 (F00284)	843BF-56K-M8 (F00302)	.75 .50 .33	1378 918 612	I II III	F843B-56K-B5-M1 (F00848)	F843BF-56K-B5-M8 (F00866)
		2460	1.28	862B-56K-M1 (F00334)	862BF-56K-M8 (F00368)	1 .75 .50	2018 1513 1000	I II III	F862B-56K-B5-M1 (F00923)	F862BF-56K-B5-M8 (F00979)

* Gear Ratio is Approximate. For Actual Gear Ratio Reference Pages 176-185.
** Service Class I (S.F. = 1.00) Service Class II (S.F. = 1.50) Service III (S.F. = 2.00)
Actual Output RPM = Input Speed ÷ Actual Ratio.
For Overhung Load Ratings refer to Page 157.
▭ Indicates Triple Reduction

@ 1750 RPM Input

FOR RATINGS AT OTHER INPUT SPEEDS, SEE TABLES ON PAGES 176-185.
ORDER BY CATALOG NUMBER OR ITEM CODE
FOR STANDARD MOUNTING POSITIONS

Approx. Output RPM	Ratio*	Non-Flanged				Flanged (Gearmotors)				
		Gear Capacity		Non-Flange O/P	Output Flange	Ratings			Non-Flange O/P	Output Flange
		Output Torque (LB-IN.)	Input HP	Catalog No. (Item Code)	Catalog No. (Item Code)	Motor HP	Output Torque (LB-IN.)	S.C.**	Catalog No. (Item Code)	Catalog No. (Item Code)
31 (CONT.)	56	2887	1.54	863B-56K-M1 (F00388)	863BF-56K-M8 (F00406)	1.5	2887	I	F863B-56K-B7-M1 (F01009)	F863BF-56K-B7-M8 (F01033)
						1 .75	1939 1459	II III	F863B-56K-B5-M1 (F01008)	F863BF-56K-B5-M8 (F01032)
		4629	2.50	872B-56K-M1 (F00437)	872BF-56K-M8 (F00470)	2 1.5	3665 2749	I II	F872B-56K-B7-M1 (F01081)	F872BF-56K-B7-M8 (F01127)
						1	1832	III	F872B-56K-B5-M1 (F01080)	F872BF-56K-B5-M8 (F01126)
		5227	2.69	873B-56K-M1 (F00490)	873BF-56K-M8 (F00508)	2 1.5	3886 2915	I II	F873B-56K-B7-M1 (F01156)	F873BF-56K-B7-M8 (F01184)
						1	1941	III	F873B-56K-B5-M1 (F01155)	F873BF-56K-B5-M8 (F01183)
27	63	500	0.25	832B-63K-M1 (F00131)	832BF-63K-M8 (F00164)	.25 .16	500 330	I II	F832B-63K-B5-M1 (F00643)	F832BF-63K-B5-M8 (F00693)
		522	0.25	833B-63K-M1 (F00183)	833BF-63K-M8 (F00201)	.25 .16	502 335	I II	F833B-63K-B5-M1 (F00710)	F833BF-63K-B5-M8 (F00723)
		1475	0.70	842B-63K-M1 (F00233)	842BF-63K-M8 (F00266)	.50 .33	1000 666	I III	F842B-63K-B5-M1 (F00778)	F842BF-63K-B5-M8 (F00827)
		1300	0.65	843B-63K-M1 (F00285)	843BF-63K-M8 (F00303)	.50 .33	1044 696	I III	F843B-63K-B5-M1 (F00849)	F843BF-63K-B5-M8 (F00867)
		3098	1.52	862B-63K-M1 (F00336)	862BF-63K-M8 (F00370)	1.5	3027	I	F862B-63K-B7-M1 (F00927)	F862BF-63K-B7-M8 (F00983)
						1 .75	2018 1576	II III	F862B-63K-B5-M1 (F00926)	F862BF-63K-B5-M8 (F00982)
		2973	1.41	863B-63K-M1 (F00389)	863BF-63K-M8 (F00407)	1.5	2973	I	F863B-63K-B7-M1 (F01011)	F863BF-63K-B7-M8 (F01035)
						1 .75 .50	2109 1582 1054	I II III	F863B-63K-B5-M1 (F01010)	F863BF-63K-B5-M8 (F01034)
		5300	2.64	872B-63K-M1 (F00439)	872BF-63K-M8 (F00472)	2 1.5	3993 2995	I II	F872B-63K-B7-M1 (F01084)	F872BF-63K-B7-M8 (F01130)
						1	2080	III	F872B-63K-B5-M1 (F01083)	F872BF-63K-B5-M8 (F01129)
		5226	2.52	873B-63K-M1 (F00491)	873BF-63K-M8 (F00509)	2 1.5	4149 3112	I II	F873B-63K-B7-M1 (F01158)	F873BF-63K-B7-M8 (F01186)
						1	2075	III	F873B-63K-B5-M1 (F01157)	F873BF-63K-B5-M8 (F01185)

* Gear Ratio is Approximate. For Actual Gear Ratio Reference Pages 176-185.
** Service Class I (S.F. = 1.00) Service Class II (S.F. = 1.50) Service III (S.F. = 2.00)
Actual Output RPM = Input Speed ÷ Actual Ratio.
For Overhung Load Ratings refer to Page 157.
▭ Indicates Triple Reduction

G

800 Series Output RPM and Capacity Selection Tables

@ 1750 RPM Input

FOR RATINGS AT OTHER INPUT SPEEDS, SEE TABLES ON PAGES 176-185.
ORDER BY CATALOG NUMBER OR ITEM CODE
FOR STANDARD MOUNTING POSITIONS

Approx. Output RPM	Ratio*	Non-Flanged				Flanged (Gearmotors)				
		Gear Capacity		Non-Flange O/P	Output Flange	Ratings			Non-Flange O/P	Output Flange
		Output Torque (LB-IN.)	Input HP	Catalog No. (Item Code)	Catalog No. (Item Code)	Motor HP	Output Torque (LB-IN.)	S.C.**	Catalog No. (Item Code)	Catalog No. (Item Code)
24	71	500	0.22	832B-71K-M1 (F00133)	832BF-71K-M8 (F00166)	.25 .16	500 375	I I	F832B-71K-B5-M1 (F00647)	F832BF-71K-B5-M8 (F00696)
		577	0.24	833B-71K-M1 (F00184)	833BF-71K-M8 (F00202)	.25 .16	577 400	I I	F833B-71K-B5-M1 (F00711)	F833BF-71K-B5-M8 (F00724)
		1485	0.62	842B-71K-M1 (F00235)	842BF-71K-M8 (F00268)	.50 .33 .25	1186 709 592	I II III	F842B-71K-B5-M1 (F00782)	F842BF-71K-B5-M8 (F00830)
		1427	0.60	843B-71K-M1 (F00286)	843BF-71K-M8 (F00304)	.50 .33 .25	1189 793 594	I II III	F843B-71K-B5-M1 (F00850)	F843BF-71K-B5-M8 (F00868)
		2966	1.28	862B-71K-M1 (F00338)	862BF-71K-M8 (F00372)	1 .75 .50	2303 1720 1457	I II III	F862B-71K-B5-M1 (F00930)	F862BF-71K-B5-M8 (F00986)
		3040	1.23	863B-71K-M1 (F00390)	863BF-71K-M8 (F00408)	1 .75 .50	2473 1855 1236	I II III	F863B-71K-B5-M1 (F01012)	F863BF-71K-B5-M8 (F01036)
		5385	2.38	872B-71K-M1 (F00441)	872BF-71K-M8 (F00474)	2 1.5	4479 3359	I II	F872B-71K-B7-M1 (F01087)	F872BF-71K-B7-M8 (F01133)
						1	2239	III	F872B-71K-B5-M1 (F01086)	F872BF-71K-B5-M8 (F01132)
		5298	2.14	873B-71K-M1 (F00492)	873BF-71K-M8 (F00510)	2 1.5	4952 3714	I II	F873B-71K-B7-M1 (F01160)	F873BF-71K-B7-M8 (F01188)
						1	2476	III	F873B-71K-B5-M1 (F01159)	F873BF-71K-B5-M8 (F01187)
21	80	565	0.21	833B-80K-M1 (F00185)	833BF-80K-M8 (F00203)	.25 .16	565 448	I I	F833B-80K-B5-M1 (F00712)	F833BF-80K-B5-M8 (F00725)
		1320	0.51	843B-80K-M1 (F00287)	843BF-80K-M8 (F00305)	.50 .33 .25	1294 862 647	I II III	F843B-80K-B5-M1 (F00851)	F843BF-80K-B5-M8 (F00869)
		3038	1.13	863B-80K-M1 (F00391)	863BF-80K-M8 (F00409)	1 .75 .50	2689 2016 1344	I II III	F863B-80K-B5-M1 (F01013)	F863BF-80K-B5-M8 (F01037)
		5315	2.01	873B-80K-M1 (F00493)	873BF-80K-M8 (F00511)	2 1.5	5288 3966	I I	F873B-80K-B7-M1 (F01162)	F873BF-80K-B7-M8 (F01190)
						1	2644	III	F873B-80K-B5-M1 (F01161)	F873BF-80K-B5-M8 (F01189)

* Gear Ratio is Approximate. For Actual Gear Ratio Reference Pages 176-185.
** Service Class I (S.F. = 1.00) Service Class II (S.F. = 1.50) Service III (S.F. = 2.00)
Actual Output RPM = Input Speed ÷ Actual Ratio.
For Overhung Load Ratings refer to Page 157.
▭ Indicates Triple Reduction

@ 1750 RPM Input

FOR RATINGS AT OTHER INPUT SPEEDS, SEE TABLES ON PAGES 176-185.
ORDER BY CATALOG NUMBER OR ITEM CODE
FOR STANDARD MOUNTING POSITIONS

Approx. Output RPM	Ratio*	Non-Flanged				Flanged (Gearmotors)				
		Gear Capacity		Non-Flange O/P	Output Flange	Ratings			Non-Flange O/P	Output Flange
		Output Torque (LB-IN.)	Input HP	Catalog No. (Item Code)	Catalog No. (Item Code)	Motor HP	Output Torque (LB-IN.)	S.C.**	Catalog No. (Item Code)	Catalog No. (Item Code)
19	90	575	0.19	833B-90K-M1 (F00186)	833BF-90K-M8 (F00204)	.16	504	I	F833B-90K-B5-M1 (F00713)	F833BF-90K-B5-M8 (F00726)
		1395	0.47	843B-90K-M1 (F00288)	843BF-90K-M8 (F00306)	.50 .33 .25 .16	1398 989 741 494	I I II III	F843B-90K-B5-M1 (F00852)	F843BF-90K-B5-M8 (F00870)
		2745	0.98	863B-90K-M1 (F00392)	863BF-90K-M8 (F00410)	.75 .50	2100 1400	I III	F863B-90K-B5-M1 (F01014)	F863BF-90K-B5-M8 (F01038)
		5252	1.73	873B-90K-M1 (F00494)	873BF-90K-M8 (F00512)	1.5	4554	I	F873B-90K-B7-M1 (F01164)	F873BF-90K-B7-M8 (F01192)
						1 .75	3035 2277	II III	F873B-90K-B5-M1 (F01163)	F873BF-90K-B5-M8 (F01191)
17	100	570	0.17	833B-100K-M1 (F00169)	833BF-100K-M8 (F00187)	.16	560	I	F833B-100K-B5-M1 (F00701)	F833BF-100K-B5-M8 (F00714)
		1400	0.42	843B-100K-M1 (F00271)	843BF-100K-M8 (F00289)	.33 .25 .16	1115 836 557	I II III	F843B-100K-B5-M1 (F00835)	F843BF-100K-B5-M8 (F00853)
		3095	0.88	863B-100K-M1 (F00375)	863BF-100K-M8 (F00393)	.75 .50 .33	2638 1759 1172	I II III	F863B-100K-B5-M1 (F00991)	F863BF-100K-B5-M8 (F01015)
		5252	1.58	873B-100K-M1 (F00477)	873BF-100K-M8 (F00495)	1.5	4986	I	F873B-100K-B7-M1 (F01137)	F873BF-100K-B7-M8 (F01166)
						1 .75	3324 2498	II III	F873B-100K-B5-M1 (F01136)	F873BF-100K-B5-M8 (F01165)
15	112	543	0.15	833B-112K-M1 (F00170)	833BF-112K-M8 (F00188)	.16	543	I	F833B-112K-B5-M1 (F00702)	F833BF-112K-B5-M8 (F00715)
		1340	0.37	843B-112K-M1 (F00272)	843BF-112K-M8 (F00290)	.33 .25 .16	1282 962 641	I II III	F843B-112K-B5-M1 (F00836)	F843BF-112K-B5-M8 (F00854)
		2820	0.79	863B-112K-M1 (F00376)	863BF-112K-M8 (F00394)	.75 .50 .33	2678 1786 1190	I II III	F863B-112K-B5-M1 (F00992)	F863BF-112K-B5-M8 (F01016)
		5300	1.37	873B-112K-M1 (F00478)	873BF-112K-M8 (F00496)	1 .75 .50	3868 2900 1934	I II III	F873B-112K-B5-M1 (F01139)	F873BF-112K-B5-M8 (F01167)

* Gear Ratio is Approximate. For Actual Gear Ratio Reference Pages 176-185.
** Service Class I (S.F. = 1.00) Service Class II (S.F. = 1.50) Service III (S.F. = 2.00)
Actual Output RPM = Input Speed ÷ Actual Ratio.
For Overhung Load Ratings refer to Page 157.
▭ Indicates Triple Reduction

G

800 Series Output RPM and Capacity Selection Tables

@ 1750 RPM Input

FOR RATINGS AT OTHER INPUT SPEEDS, SEE TABLES ON PAGES 176-185.
ORDER BY CATALOG NUMBER OR ITEM CODE
FOR STANDARD MOUNTING POSITIONS

Approx. Output RPM	Ratio*	Non-Flanged				Flanged (Gearmotors)				
		Gear Capacity		Non-Flange O/P	Output Flange	Ratings			Non-Flange O/P	Output Flange
		Output Torque (LB-IN.)	Input HP	Catalog No. (Item Code)	Catalog No. (Item Code)	Motor HP	Output Torque (LB-IN.)	S.C.**	Catalog No. (Item Code)	Catalog No. (Item Code)
14	125	523	0.13	833B-125K-M1 (F00171)	833BF-125K-M8 (F00189)	.16	523	I	F833B-125K-B5-M1 (F00703)	F833BF-125K-B5-M8 (F00716)
		1430	0.33	843B-125K-M1 (F00273)	843BF-125K-M8 (F00291)	.33 .25 .16	1430 1083 722	I I III	F843B-125K-B5-M1 (F00837)	F843BF-125K-B5-M8 (F00855)
		3000	0.70	863B-125K-M1 (F00377)	863BF-125K-M8 (F00395)	.50 .33	2150 1433	I III	F863B-125K-B5-M1 (F00993)	F863BF-125K-B5-M8 (F01017)
		5337	1.26	873B-125K-M1 (F00479)	873BF-125K-M8 (F00497)	1 .75 .50	4236 3177 2118	I II III	F873B-125K-B5-M1 (F01140)	F873BF-125K-B5-M8 (F01168)
12	140	487	0.11	833B-140K-M1 (F00172)	833BF-140K-M8 (F00190)	.16	487	I	F833B-140K-B5-M1 (F00704)	F833BF-140K-B5-M8 (F00717)
		1360	0.29	843B-140K-M1 (F00274)	843BF-140K-M8 (F00292)	.25 .16	1175 783	I II	F843B-140K-B5-M1 (F00838)	F843BF-140K-B5-M8 (F00856)
		2916	0.65	863B-140K-M1 (F00378)	863BF-140K-M8 (F00396)	.50 .33	2443 1495	I III	F863B-140K-B5-M1 (F00994)	F863BF-140K-B5-M8 (F01018)
		5247	1.11	873B-140K-M1 (F00480)	873BF-140K-M8 (F00498)	1 .75 .50	4727 3545 2363	I II III	F873B-140K-B5-M1 (F01141)	F873BF-140K-B5-M8 (F01169)
10	160	490	0.10	833B-160K-M1 (F00173)	833BF-160K-M8 (F00191)	—	—	—	—	—
		1410	0.27	843B-160K-M1 (F00275)	843BF-160K-M8 (F00293)	.25 .16	1325 883	I II	F843B-160K-B5-M1 (F00839)	F843BF-160K-B5-M8 (F00857)
		3130	0.58	863B-160K-M1 (F00379)	863BF-160K-M8 (F00397)	.50 .33 .25	2700 1800 1350	I II III	F863B-160K-B5-M1 (F00995)	F863BF-160K-B5-M8 (F01019)
		5280	1.02	873B-160K-M1 (F00481)	873BF-160K-M8 (F00499)	1 .75 .50	5176 3882 2588	I I III	F873B-160K-B5-M1 (F01142)	F873BF-160K-B5-M8 (F01170)
9.7 (CONT.)	180	555	0.10	833B-180K-M1 (F00174)	833BF-180K-M8 (F00192)	—	—	—	—	—
		1436	0.24	843B-180K-M1 (F00276)	843BF-180K-M8 (F00294)	.25 .16	1436 997	I I	F843B-180K-B5-M1 (F00840)	F843BF-180K-B5-M8 (F00858)
		3146	0.53	863B-180K-M1 (F00380)	863BF-180K-M8 (F00398)	.50 .33	2975 1980	I II	F863B-180K-B5-M1 (F00996)	F863BF-180K-B5-M8 (F01020)

* Gear Ratio is Approximate. For Actual Gear Ratio Reference Pages 176-185.
** Service Class I (S.F. = 1.00) Service Class II (S.F. = 1.50) Service III (S.F. = 2.00)
Actual Output RPM = Input Speed ÷ Actual Ratio.
For Overhung Load Ratings refer to Page 157.
▭ Indicates Triple Reduction

@ 1750 RPM Input

FOR RATINGS AT OTHER INPUT SPEEDS, SEE TABLES ON PAGES 176-185.
ORDER BY CATALOG NUMBER OR ITEM CODE
FOR STANDARD MOUNTING POSITIONS

Approx. Output RPM	Ratio*	Non-Flanged				Flanged (Gearmotors)				
		Gear Capacity		Non-Flange O/P	Output Flange	Ratings			Non-Flange O/P	Output Flange
		Output Torque (LB-IN.)	Input HP	Catalog No. (Item Code)	Catalog No. (Item Code)	Motor HP	Output Torque (LB-IN.)	S.C.**	Catalog No. (Item Code)	Catalog No. (Item Code)
9.7 (CONT.)	180	5362	0.92	873B-180K-M1 (F00482)	873BF-180K-M8 (F00500)	.75 .50 .33	4371 2914 1942	I II III	F873B-180K-B5-M1 (F01143)	F873BF-180K-B5-M8 (F01171)
8.8	200	568	0.09	833B-200K-M1 (F00175)	833BF-200K-M8 (F00193)	—	—	—	—	—
		1428	0.21	843B-200K-M1 (F00277)	843BF-200K-M8 (F00295)	.25 .16	1428 1133	I I	F843B-200K-B5-M1 (F00841)	F843BF-200K-B5-M8 (F00859)
		3173	0.47	863B-200K-M1 (F00381)	863BF-200K-M8 (F00399)	.33 .25 .16	2250 1688 1125	I II III	F863B-200K-B5-M1 (F00997)	F863BF-200K-B5-M8 (F01021)
		5432	0.82	873B-200K-M1 (F00483)	873BF-200K-M8 (F00501)	.75 .50 .33	4968 3216 2208	I II III	F873B-200K-B5-M1 (F01144)	F873BF-200K-B5-M8 (F01172)
7.8	225	544	0.08	833B-225K-M1 (F00176)	833BF-225K-M8 (F00194)	—	—	—	—	—
		1410	0.19	843B-225K-M1 (F00278)	843BF-225K-M8 (F00296)	.16	1219	I	F843B-225K-B5-M1 (F00842)	F843BF-225K-B5-M8 (F00860)
		3146	0.44	863B-225K-M1 (F00382)	863BF-225K-M8 (F00400)	.33 .25 .16	2383 1788 1192	I II III	F863B-225K-B5-M1 (F00998)	F863BF-225K-B5-M8 (F01022)
		5341	0.75	873B-225K-M1 (F00484)	873BF-225K-M8 (F00502)	.75 .50 .33	5341 3561 2375	I II III	F873B-225K-B5-M1 (F01145)	F873BF-225K-B5-M8 (F01173)
7.0	250	540	0.07	833B-250K-M1 (F00177)	833BF-250K-M8 (F00195)	—	—	—	—	—
		1410	0.17	843B-250K-M1 (F00279)	843BF-250K-M8 (F00297)	.16	1385	I	F843B-250K-B5-M1 (F00843)	F843BF-250K-B5-M8 (F00861)
		3110	0.39	863B-250K-M1 (F00383)	863BF-250K-M8 (F00401)	.33 .25 .16	2709 2032 1355	I II III	F863B-250K-B5-M1 (F00999)	F863BF-250K-B5-M8 (F01023)
		5423	0.67	873B-250K-M1 (F00485)	873BF-250K-M8 (F00503)	.50 .33	4047 2698	I III	F873B-250K-B5-M1 (F01146)	F873BF-250K-B5-M8 (F01174)

* Gear Ratio is Approximate. For Actual Gear Ratio Reference Pages 176-185.
** Service Class I (S.F. = 1.00) Service Class II (S.F. = 1.50) Service III (S.F. = 2.00)
Actual Output RPM = Input Speed ÷ Actual Ratio.
For Overhung Load Ratings refer to Page 157.
▭ Indicates Triple Reduction

Non-Flanged; Input Speeds 1750, 1450 and 1160 RPM

Service Factor 1.0*

Catalog Number	Input Speed								
	1750 RPM			1450 RPM			1160 RPM		
	Approx. Output RPM	Output Torque (LB-IN)(Max.)	Input HP (Max.)	Approx. Output RPM	Output Torque (LB-IN)(Max.)	Input HP (Max.)	Approx. Output RPM	Output Torque (LB-IN) (Max.)	Input HP (Max.)
832B/BF1.5K	1170	288	5.80	970	293	4.82	773	293	3.85
842B/BF1.5K	1170	479	9.08	970	509	8.00	773	549	6.89
862B/BF1.5K	1170	830	16.20	970	884	14.30	773	950	12.30
872B/BF1.5K	1170	1094	21.20	970	1090	17.50	773	1090	14.00
832B/BF1.9K	922	325	4.77	763	325	3.95	610	325	3.16
842B/BF1.9K	922	643	8.69	763	685	7.66	610	738	6.60
862B/BF1.9K	922	1100	15.40	763	1189	13.60	610	1278	11.70
872B/BF1.9K	922	1492	21.20	763	1485	17.50	610	1484	14.00
832B/BF2.3K	760	333	4.29	630	339	3.56	504	339	2.84
842B/BF2.3K	760	695	8.52	630	739	7.51	504	788	6.40
862B/BF2.3K	760	1217	15.00	630	1292	13.20	504	1396	11.40
872B/BF2.3K	760	1680	21.20	630	1680	17.50	504	1680	14.00
832B/BF2.6K	673	350	3.98	560	350	3.30	446	350	2.64
842B/BF2.6K	673	715	7.95	560	762	7.01	446	777	5.72
862B/BF2.6K	673	1320	14.50	560	1408	12.80	446	1498	10.90
872B/BF2.6K	673	1800	21.20	560	1796	17.50	446	1796	14.00
832B/BF2.9K	605	533	5.18	500	544	4.38	400	559	3.60
842B/BF2.9K	605	840	8.34	500	872	7.35	400	939	6.33
862B/BF2.9K	605	1560	15.90	500	1660	14.00	400	1790	12.10
872B/BF2.9K	605	2135	21.20	500	2130	17.50	400	2130	14.00
832B/BF3.3K	530	370	3.24	440	370	2.69	350	370	2.15
842B/BF3.3K	530	775	7.03	440	775	5.83	350	775	4.66
862B/BF3.3K	530	1550	13.40	440	1648	11.80	350	1720	9.85
872B/BF3.3K	530	2398	21.20	440	2390	17.50	350	2390	14.00
832B/BF3.5K	500	376	3.11	414	376	2.57	331	376	2.06
842B/BF3.5K	500	858	6.46	414	832	5.35	331	832	4.28
862B/BF3.5K	500	1665	12.70	414	1751	11.10	331	1814	9.16
872B/BF3.5K	500	2704	21.00	414	2720	17.50	331	2720	14.00
832B/BF3.9K	448	552	3.97	372	563	3.36	297	576	2.75
842B/BF3.9K	448	959	6.96	372	1020	6.13	297	1100	5.28
862B/BF3.9K	448	1835	13.30	372	1950	11.70	297	2110	10.10
872B/BF3.9K	448	2902	21.20	372	2892	17.50	297	2892	14.00
832B/BF4.4K	400	572	3.54	330	585	3.00	264	588	2.41
842B/BF4.4K	400	1000	6.59	330	1066	5.81	264	1146	5.00
862B/BF4.4K	400	1933	12.50	330	2050	11.00	264	2215	9.49
872B/BF4.4K	400	3265	21.20	330	3254	17.50	264	3254	14.00
832B/BF5.1K	340	592	3.31	285	592	2.74	227	592	2.19
842B/BF5.1K	340	1065	5.96	285	1135	5.26	227	1232	4.53
862B/BF5.1K	340	2042	11.60	285	2167	10.20	227	2330	8.78
872B/BF5.1K	340	3698	21.20	285	3685	17.50	227	3685	14.00

* For applications requiring a service factor greater than 1.0, multiply the design torque or horsepower by the application factor, found on pages 356-358.
Actual Output RPM = Input Speed ÷ Actual Ratio.
For Overhung Load Ratings refer to Page 153.

Non-Flanged; Input Speeds 690 and 100 RPM

Service Factor 1.0*

Catalog Number	Input Speed						Approx. Wt. (LB)	Actual Gear Ratio
	690 RPM			100 RPM				
	Approx. Output RPM	Output Torque (LB-IN)(Max.)	Input HP (Max.)	Approx. Output RPM	Output Torque (LB-IN)(Max.)	Input HP (Max.)		
832B/BF1.5K	460	293	2.29	67	293	.33	21	1.440
842B/BF1.5K	460	580	4.34	67	580	.63	29	1.512
862B/BF1.5K	460	1054	8.11	67	1058	1.18	51	1.467
872B/BF1.5K	460	1090	8.30	67	1090	1.20	99	1.479
832B/BF1.9K	363	325	1.87	53	325	.27	21	1.945
842B/BF1.9K	363	767	4.08	53	767	.59	29	2.121
862B/BF1.9K	363	1384	7.53	53	1384	1.09	51	2.074
872B/BF1.9K	363	1500	8.32	53	1500	1.21	99	2.012
832B/BF2.3K	300	337	1.68	43	333	.24	21	2.263
842B/BF2.3K	300	787	3.80	43	787	.55	29	2.337
862B/BF2.3K	300	1494	7.26	43	1492	1.05	51	2.324
872B/BF2.3K	300	1680	8.30	43	1680	1.20	99	2.261
832B/BF2.6K	265	350	1.56	38	350	.23	21	2.506
842B/BF2.6K	265	775	3.39	38	775	.49	29	2.577
862B/BF2.6K	265	1495	6.47	38	1500	.94	51	2.609
872B/BF2.6K	265	1792	8.31	38	1785	1.20	99	2.434
832B/BF2.9K	238	576	2.18	34	576	.32	21	2.945
842B/BF2.9K	238	1080	4.33	34	1080	.63	29	2.814
862B/BF2.9K	238	2018	8.10	34	2018	1.17	51	2.813
872B/BF2.9K	238	2140	8.30	34	2140	1.20	99	2.888
832B/BF3.3K	210	367	1.27	30	367	.18	21	3.268
842B/BF3.3K	210	772	2.76	30	772	.40	29	3.158
862B/BF3.3K	210	1788	6.09	30	1788	.88	51	3.313
872B/BF3.3K	210	2391	8.33	30	2391	1.21	99	3.240
832B/BF3.5K	197	376	1.22	28	376	.18	21	3.455
842B/BF3.5K	197	830	2.54	28	830	.37	29	3.692
862B/BF3.5K	197	1911	5.74	28	1911	.83	51	3.758
872B/BF3.5K	197	2391	7.32	28	2390	1.06	99	3.687
832B/BF3.9K	177	576	1.62	26	576	.23	21	3.978
842B/BF3.9K	177	1277	3.65	26	1277	.53	29	3.948
862B/BF3.9K	177	2540	7.18	26	2540	1.04	51	3.952
872B/BF3.9K	177	2880	8.29	26	2880	1.20	99	3.920
832B/BF4.4K	157	582	1.42	23	582	.21	21	4.630
842B/BF4.4K	157	1187	3.08	23	1187	.45	29	4.351
862B/BF4.4K	157	2374	6.05	23	2374	.88	51	4.429
872B/BF4.4K	157	3243	8.30	23	3243	1.20	99	4.410
832B/BF5.1K	135	585	1.29	20	585	.19	21	5.126
842B/BF5.1K	135	1288	2.84	20	1288	.41	29	5.119
862B/BF5.1K	135	2570	5.70	20	2570	.83	51	5.040
872B/BF5.1K	135	3660	8.27	20	3660	1.20	99	4.995

* For applications requiring a service factor greater than 1.0, multiply the design torque or horsepower by the application factor, found on pages 356-358.
Actual Output RPM = Input Speed ÷ Actual Ratio.
For Overhung Load Ratings refer to Page 153.

Non-Flanged; Input Speeds 1750, 1450 and 1160 RPM

Service Factor 1.0*

Catalog Number	Input Speed								
	1750 RPM			1450 RPM			1160 RPM		
	Approx. Output RPM	Output Torque (LB-IN)(Max.)	Input HP (Max.)	Approx. Output RPM	Output Torque (LB-IN)(Max.)	Input HP (Max.)	Approx. Output RPM	Output Torque (LB-IN) (Max.)	Input HP (Max.)
832B/BF5.7K	307	563	2.91	254	563	2.41	203	563	1.93
842B/BF5.7K	307	1110	5.64	254	1182	4.97	203	1272	4.28
862B/BF5.7K	307	2140	10.80	254	2280	9.56	203	2450	8.23
872B/BF5.7K	307	4160	21.20	254	4146	17.50	203	4146	14.00
832B/BF6.4K	273	588	2.52	226	588	2.08	181	588	1.67
842B/BF6.4K	273	1095	5.34	226	1138	4.60	181	1175	3.80
862B/BF6.4K	273	2248	10.20	226	2400	9.01	181	2501	7.52
872B/BF6.4K	273	4623	20.90	226	4674	17.50	181	4674	14.00
832B/BF7.2K	243	576	2.34	201	576	1.93	161	576	1.55
842B/BF7.2K	243	1171	4.88	201	1206	4.16	161	1246	3.44
862B/BF7.2K	243	2380	9.49	201	2500	8.26	161	2590	6.83
872B/BF7.2K	243	4859	19.30	201	5168	17.00	161	5282	13.90
832B/BF8K	218	560	2.01	181	560	1.66	145	560	1.33
842B/BF8K	218	1206	4.54	181	1254	3.91	145	1299	3.24
862B/BF8K	218	2480	8.82	181	2640	7.77	145	2760	6.49
872B/BF8K	218	5074	18.00	181	5343	15.70	145	5360	12.60
832B/BF9K	194	636	1.86	161	636	1.54	128	636	1.23
842B/BF9K	194	1275	4.14	161	1326	3.53	128	1414	2.92
862B/BF9K	194	2608	8.18	161	2737	7.11	128	2830	5.88
872B/BF9K	194	5358	16.70	161	5384	13.90	128	5375	11.10
832B/BF10K	175	576	1.63	145	576	1.35	116	576	1.08
842B/BF10K	175	1295	3.82	145	1330	3.26	116	1400	2.73
862B/BF10K	175	2600	7.56	145	2680	6.44	116	2780	5.36
872B/BF10K	175	5360	15.70	145	5238	13.10	116	5200	10.40
832B/BF11K	159	576	1.43	131	576	1.18	105	576	0.95
842B/BF11K	159	1330	3.45	131	1380	2.96	105	1420	2.43
862B/BF11K	159	2680	6.70	131	2760	5.72	105	2900	4.79
872B/BF11K	159	5291	13.70	131	5315	11.40	105	5304	9.10
832B/BF12K	145	550	1.30	120	550	1.08	96	550	0.86
842B/BF12K	145	1419	3.23	120	1488	2.72	96	1439	2.17
862B/BF12K	145	2840	6.49	120	2920	5.53	96	2990	4.52
872B/BF12K	145	5439	12.50	120	5300	10.40	96	5300	8.31
832B/BF14K	125	550	1.14	103	554	0.95	82	554	0.76
842B/BF14K	125	1443	2.89	103	1440	2.39	82	1440	1.91
862B/BF14K	125	2910	5.72	103	2970	4.83	82	3030	3.95
872B/BF14K	125	5364	10.90	103	5378	9.05	82	5378	7.24
832B/BF16K	109	576	1.06	90	576	0.88	72	576	0.70
842B/BF16K	109	1380	2.49	90	1380	2.06	72	1380	1.65
862B/BF16K	109	2900	5.12	90	3010	4.42	72	3070	3.60
872B/BF16K	109	5245	9.60	90	5250	7.96	72	5250	6.37

* For applications requiring a service factor greater than 1.0, multiply the design torque or horsepower by the application factor, found on pages 356-358.
Actual Output RPM = Input Speed ÷ Actual Ratio.
For Overhung Load Ratings refer to Page 153.

Non-Flanged; Input Speeds 690 and 100 RPM

Service Factor 1.0*

Catalog Number	Input Speed						Approx. Wt. (LB)	Actual Gear Ratio
	690 RPM			100 RPM				
	Approx. Output RPM	Output Torque (LB-IN)(Max.)	Input HP (Max.)	Approx. Output RPM	Output Torque (LB-IN)(Max.)	Input HP (Max.)		
832B/BF5.7K	121	555	1.13	18	555	.16	21	5.540
842B/BF5.7K	121	1320	2.64	18	1320	.38	29	5.641
862B/BF5.7K	121	2622	5.24	18	2622	.76	51	5.649
872B/BF5.7K	121	4112	8.26	18	4112	1.20	99	5.620
832B/BF6.4K	108	588	0.98	16	588	.14	21	6.685
842B/BF6.4K	108	1222	2.35	16	1222	.34	29	5.970
862B/BF6.4K	108	2674	4.78	16	2674	.69	51	6.313
872B/BF6.4K	108	4653	8.29	16	4653	1.20	99	6.335
832B/BF7.2K	96	576	0.91	14	576	.13	21	7.067
842B/BF7.2K	96	1315	2.16	14	1315	.31	29	6.874
862B/BF7.2K	96	2772	4.37	14	2722	.63	51	7.160
872B/BF7.2K	96	5276	8.26	14	5276	1.20	99	7.210
832B/BF8K	86	560	0.78	12	560	.11	21	8.000
842B/BF8K	86	1328	1.97	12	1328	.29	29	7.610
862B/BF8K	86	2867	4.02	12	2867	.58	51	8.051
872B/BF8K	86	5322	7.44	12	5322	1.08	99	8.073
832B/BF9K	77	633	0.73	11	633	.11	21	9.792
842B/BF9K	77	1366	1.73	11	1366	.25	29	8.913
862B/BF9K	77	2937	3.63	11	2937	.53	51	9.131
872B/BF9K	77	5324	6.54	11	5324	.95	99	9.188
832B/BF10K	69	576	0.64	10	576	.09	21	10.112
842B/BF10K	69	1402	1.63	10	1402	.24	29	9.706
862B/BF10K	69	2935	3.37	10	2935	.49	51	9.832
872B/BF10K	69	5194	6.18	10	5194	.90	99	9.485
832B/BF11K	63	576	0.56	9.1	576	.08	21	11.566
842B/BF11K	63	1420	1.44	9.1	1420	.21	29	11.025
862B/BF11K	63	2900	3.00	9.1	2900	.43	51	11.434
872B/BF11K	63	5272	5.38	9.1	5272	.78	99	11.060
832B/BF12K	57	550	0.51	8.3	550	.07	21	12.101
842B/BF12K	57	1416	1.27	8.3	1416	.18	29	12.584
862B/BF12K	57	3032	2.73	8.3	3032	.40	51	12.537
872B/BF12K	57	5247	4.90	8.3	5247	.71	99	12.087
832B/BF14K	49	539	0.44	7.1	539	.06	21	13.829
842B/BF14K	49	1418	1.12	7.1	1418	.16	29	14.295
862B/BF14K	49	3087	2.39	7.1	3087	.35	51	14.580
872B/BF14K	49	5320	4.26	7.1	5320	.62	99	14.094
832B/BF16K	43	576	0.41	6.2	576	.06	21	15.599
842B/BF16K	43	1363	0.97	6.2	1363	.14	29	15.866
862B/BF16K	43	3035	2.12	6.2	3035	.31	51	16.159
872B/BF16K	43	5212	3.76	6.2	5212	.55	99	15.645

* For applications requiring a service factor greater than 1.0, multiply the design torque or horsepower by the application factor, found on pages 356-358.
Actual Output RPM = Input Speed ÷ Actual Ratio.
For Overhung Load Ratings refer to Page 153.

Non-Flanged; Input Speeds 1750, 1450 and 1160 RPM

Service Factor 1.0*

Catalog Number	Input Speed								
	1750 RPM			1450 RPM			1160 RPM		
	Approx. Output RPM	Output Torque (LB-IN)(Max.)	Input HP (Max.)	Approx. Output RPM	Output Torque (LB-IN)(Max.)	Input HP (Max.)	Approx. Output RPM	Output Torque (LB-IN) (Max.)	Input HP (Max.)
832B/BF18K	97	590	0.91	80	590	0.75	64	590	0.60
842B/BF18K	97	1420	2.35	80	1420	1.95	64	1420	1.56
862B/BF18K	97	2940	4.88	80	3060	4.20	64	3060	3.37
872B/BF18K	97	5320	8.50	80	5320	7.05	64	5320	5.64
832B/BF20K	87	590	0.85	72	590	0.70	58	590	0.56
842B/BF20K	87	1442	2.01	72	1442	1.67	58	1442	1.33
862B/BF20K	87	3014	4.19	72	3014	3.54	58	3014	2.88
872B/BF20K	87	5319	7.64	72	5266	6.33	58	5266	5.06
832B/BF22K	79	574	0.72	65	590	0.60	52	590	0.48
842B/BF22K	79	1443	1.85	65	1443	1.53	52	1443	1.23
862B/BF22K	79	3030	3.95	65	3090	3.34	52	3120	2.70
872B/BF22K	79	5398	6.77	65	5398	5.61	52	5398	4.48
832B/BF25K	70	580	0.65	58	580	0.54	46	580	0.43
842B/BF25K	70	1312	1.64	58	1312	1.36	46	1312	1.09
862B/BF25K	70	3070	3.49	58	3070	2.89	46	3070	2.31
872B/BF25K	70	5279	6.17	58	5279	5.11	46	5279	4.09
832B/BF28K	62	580	0.59	51	580	0.49	41	580	0.39
842B/BF28K	62	1467	1.46	51	1467	1.21	41	1467	0.97
862B/BF28K	62	3070	3.19	51	3070	2.64	41	3070	2.11
872B/BF28K	62	5287	5.64	51	5287	4.67	41	5287	3.74
832B/BF32K	54	555	0.52	45	555	0.43	36	555	0.34
842B/BF32K	54	1338	1.29	45	1338	1.07	36	1338	0.85
862B/BF32K	54	3120	2.79	45	3120	2.31	36	3120	1.85
872B/BF32K	54	5342	4.90	45	5342	4.06	36	5342	3.25
832B/BF36K	48	557	0.47	40	557	0.39	32	557	0.31
842B/BF36K	48	1457	1.15	40	1457	0.95	32	1457	0.76
862B/BF36K	48	3120	2.55	40	3120	2.11	32	3120	1.69
872B/BF36K	48	5296	4.48	40	5296	3.71	32	5296	2.97
833B/BF36K	48	562	0.47	40	562	0.39	32	562	0.31
843B/BF36K	48	1390	1.17	40	1390	0.97	32	1390	0.77
863B/BF36K	48	2978	2.51	40	2977	2.08	32	2977	1.66
873B/BF36K	48	5225	4.42	40	5225	3.66	32	5225	2.93
832B/BF40K	43	466	0.36	36	484	0.31	29	484	0.25
842B/BF40K	43	1375	1.00	36	1254	0.85	29	1254	0.69
862B/BF40K	43	2992	2.18	36	2930	1.84	29	2930	1.51
872B/BF40K	43	5050	3.83	36	5050	3.24	29	5050	2.63
833B/BF40K	43	560	0.41	36	562	0.34	29	562	0.27
843B/BF40K	43	1390	1.02	36	1390	0.85	29	1390	0.68
863B/BF40K	43	2978	2.21	36	2978	1.83	29	2978	1.46
873B/BF40K	43	5225	3.80	36	5225	3.15	29	5225	2.52

* For applications requiring a service factor greater than 1.0, multiply the design torque or horsepower by the application factor, found on pages 356-358.
Actual Output RPM = Input Speed ÷ Actual Ratio.
For Overhung Load Ratings refer to Page 153.
▭ Indicates Triple Reduction

Non-Flanged; Input Speeds 690 and 100 RPM

Service Factor 1.0*

Catalog Number	Input Speed						Approx. Wt. (LB)	Actual Gear Ratio
	690 RPM			100 RPM				
	Approx. Output RPM	Output Torque (LB-IN)(Max.)	Input HP (Max.)	Approx. Output RPM	Output Torque (LB-IN)(Max.)	Input HP (Max.)		
832B/BF18K	38	590	.35	5.5	590	.05	21	18.667
842B/BF18K	38	1420	.92	5.5	1420	.13	29	17.252
862B/BF18K	38	3060	1.99	5.5	3060	.29	51	17.253
872B/BF18K	38	5320	3.33	5.5	5320	.48	99	17.920
832B/BF20K	34	590	.33	5.0	590	.05	21	20.308
842B/BF20K	34	1442	.78	5.0	1442	.11	29	20.548
862B/BF20K	34	3014	1.69	5.0	3014	.25	51	20.606
872B/BF20K	34	5266	2.98	5.0	5266	.43	99	19.936
832B/BF22K	31	590	.28	4.5	590	.04	21	22.848
842B/BF22K	31	1425	.72	4.5	1425	.10	29	22.343
862B/BF22K	31	3120	1.58	4.5	3120	.23	51	22.001
872B/BF22K	31	5398	2.63	4.5	5398	.38	99	22.835
832B/BF25K	28	580	.25	4.0	580	.04	21	25.560
842B/BF25K	28	1312	.64	4.0	1312	.09	29	22.908
862B/BF25K	28	3070	1.36	4.0	3070	.20	51	25.246
872B/BF25K	28	5279	2.41	4.0	5279	.35	99	24.500
832B/BF28K	25	580	.23	3.6	580	.03	21	28.400
842B/BF28K	25	1467	.57	3.6	1467	.08	29	28.777
862B/BF28K	25	3070	1.24	3.6	3070	.18	51	27.643
872B/BF28K	25	5287	2.20	3.6	5287	.32	99	26.845
832B/BF32K	21	555	.20	3.1	555	.03	21	30.587
842B/BF32K	21	1315	.50	3.1	1338	.07	29	29.701
862B/BF32K	21	3120	1.08	3.1	3120	.16	51	32.193
872B/BF32K	21	5342	1.91	3.1	5344	.28	99	31.220
832B/BF36K	19	557	.18	2.8	557	.03	21	33.986
842B/BF36K	19	1457	.44	2.8	1457	.06	29	36.292
862B/BF36K	19	3120	.99	2.8	3120	.14	51	35.249
872B/BF36K	19	5296	1.74	2.8	5296	.25	99	34.208
833B/BF36K	19	562	.18	2.8	562	.03	29	35.393
843B/BF36K	19	1390	.45	2.8	1380	.07	37	35.193
863B/BF36K	19	2977	.97	2.8	2977	.14	59	35.059
873B/BF36K	19	5225	1.71	2.8	5225	.25	114	34.934
832B/BF40K	17	485	.15	2.5	485	.02	21	37.438
842B/BF40K	17	1254	.40	2.5	1254	.06	29	36.292
862B/BF40K	17	2930	.89	2.5	2930	.13	51	38.753
872B/BF40K	17	5050	1.54	2.5	5050	.22	99	38.150
833B/BF40K	17	562	.16	2.5	562	.02	29	40.446
843B/BF40K	17	1390	.39	2.5	1390	.06	37	40.216
863B/BF40K	17	2972	.85	2.5	2978	.12	59	39.830
873B/BF40K	17	5225	1.47	2.5	5225	.22	114	40.631

* For applications requiring a service factor greater than 1.0, multiply the design torque or horsepower by the application factor, found on pages 356-358.
Actual Output RPM = Input Speed ÷ Actual Ratio.
For Overhung Load Ratings refer to Page 153.
▭ Indicates Triple Reduction

Non-Flanged; Input Speeds 1750, 1450 and 1160 RPM

Service Factor 1.0*

Catalog Number	Input Speed								
	1750 RPM			1450 RPM			1160 RPM		
	Approx. Output RPM	Output Torque (LB-IN)(Max.)	Input HP (Max.)	Approx. Output RPM	Output Torque (LB-IN)(Max.)	Input HP (Max.)	Approx. Output RPM	Output Torque (LB-IN) (Max.)	Input HP (Max.)
832B/BF45K	38	480	0.33	32	480	0.28	25	480	0.23
842B/BF45K	38	1410	0.90	32	1410	0.76	25	1450	0.61
862B/BF45K	38	2950	2.01	32	3010	1.70	25	3090	1.39
872B/BF45K	38	5167	3.54	32	5215	2.99	25	5254	2.41
833B/BF45K	38	544	0.38	32	540	0.31	25	540	0.25
843B/BF45K	38	1420	0.92	32	1420	0.76	25	1420	0.61
863B/BF45K	38	3040	2.01	32	3040	1.66	25	3040	1.33
873B/BF45K	38	5300	3.52	32	5300	2.91	25	5300	2.33
832B/BF50K	35	555	0.34	29	536	0.28	23	536	0.22
842B/BF50K	35	1500	0.87	29	1453	0.72	23	1500	0.58
862B/BF50K	35	3150	1.86	29	3150	1.55	23	3150	1.24
872B/BF50K	35	5216	3.16	29	5250	2.66	23	5250	2.10
833B/BF50K	35	540	0.33	29	540	0.27	23	540	0.22
843B/BF50K	35	1429	0.81	29	1429	0.67	23	1429	0.54
863B/BF50K	35	3040	1.77	29	3040	1.46	23	3040	1.17
873B/BF50K	35	5290	3.02	29	5290	2.50	23	5290	2.00
832B/BF56K	31	540	0.29	25	540	0.25	20	540	0.20
842B/BF56K	31	1392	0.71	25	1400	0.60	20	1400	0.49
862B/BF56K	31	2460	1.28	25	2460	1.06	20	2460	0.85
872B/BF56K	31	4629	2.50	25	4647	2.10	20	4700	1.70
833B/BF56K	31	554	0.30	25	540	0.25	20	540	0.20
843B/BF56K	31	1396	0.76	25	1396	0.63	20	1396	0.50
863B/BF56K	31	2887	1.54	25	2987	1.27	20	2987	1.01
873B/BF56K	31	5227	2.69	25	5227	2.23	20	5227	1.78
832B/BF63K	27	500	0.25	23	480	0.20	18	480	0.16
842B/BF63K	27	1475	0.70	23	1475	0.58	18	1425	0.45
862B/BF63K	27	3098	1.52	23	3120	1.29	18	3138	1.02
872B/BF63K	27	5300	2.64	23	5300	2.18	18	5300	1.75
833B/BF63K	27	522	0.26	23	530	0.22	18	530	0.17
843B/BF63K	27	1300	0.65	23	1300	0.54	18	1300	0.43
863B/BF63K	27	2973	1.41	23	2973	1.17	18	2973	0.94
873B/BF63K	27	5226	2.52	23	5228	2.09	18	5228	1.67
832B/BF71K	24	500	0.22	20	500	0.18	16	500	0.15
842B/BF71K	24	1485	0.62	20	1485	0.51	16	1485	0.41
862B/BF71K	24	2966	1.28	20	2966	1.06	16	2966	0.85
872B/BF71K	24	5385	2.38	20	5385	1.97	16	5385	1.58
833B/BF71K	24	577	0.24	20	577	0.20	16	577	0.16
843B/BF71K	24	1427	0.60	20	1427	0.50	16	1427	0.40
863B/BF71K	24	3040	1.23	20	3040	1.02	16	3040	0.81
873B/BF71K	24	5298	2.14	20	5298	1.77	16	5298	1.42

* For applications requiring a service factor greater than 1.0, multiply the design torque or horsepower by the application factor, found on pages 356-358.
Actual Output RPM = Input Speed ÷ Actual Ratio.
For Overhung Load Ratings refer to Page 153.
▭ Indicates Triple Reduction

Non-Flanged; Input Speeds 690 and 100 RPM

Service Factor 1.0*

Catalog Number	Input Speed						Approx. Wt. (LB)	Actual Gear Ratio
	690 RPM			100 RPM				
	Approx. Output RPM	Output Torque (LB-IN)(Max.)	Input HP (Max.)	Approx. Output RPM	Output Torque (LB-IN)(Max.)	Input HP (Max.)		
832B/BF45K	15	480	.13	2.2	480	.02	21	41.599
842B/BF45K	15	1450	.36	2.2	1450	.05	29	45.591
862B/BF45K	15	3090	.82	2.2	3090	.12	51	42.431
872B/BF45K	15	5254	1.41	2.2	5254	.20	99	41.802
833B/BF45K	15	580	.15	2.2	540	.02	29	42.354
843B/BF45K	15	1420	.36	2.2	1420	.05	37	45.630
863B/BF45K	15	3040	.78	2.2	3040	.12	59	44.706
873B/BF45K	15	5300	1.38	2.2	5300	.20	114	44.521
832B/BF50K	14	536	.13	2.0	536	.02	21	46.910
842B/BF50K	14	1500	.34	2.0	1500	.05	29	49.414
862B/BF50K	14	3150	.73	2.0	3150	.10	51	48.501
872B/BF50K	14	5250	1.26	2.0	5250	.18	99	47.276
833B/BF50K	14	540	.12	2.0	540	.02	29	48.400
843B/BF50K	14	1429	.32	2.0	1429	.04	37	52.143
863B/BF50K	14	3040	.70	2.0	3040	.10	59	50.789
873B/BF50K	14	5290	1.19	2.0	5290	.17	114	51.776
832B/BF56K	12	540	.12	2.0	540	.02	21	53.312
842B/BF56K	12	1400	.28	2.0	1400	.04	29	56.158
862B/BF56K	12	2460	.50	2.0	2460	.07	51	55.125
872B/BF56K	12	4700	1.01	2.0	4700	.15	99	53.029
833B/BF56K	12	540	.12	2.0	540	.02	29	54.596
843B/BF56K	12	1396	.30	2.0	1396	.04	37	54.281
863B/BF56K	12	2987	.59	2.0	2987	.09	59	57.321
873B/BF56K	12	5227	1.06	2.0	5227	.15	114	57.422
832B/BF63K	11	480	.09	1.6	480	.01	21	57.390
842B/BF63K	11	1475	.28	1.6	1475	.04	29	60.380
862B/BF63K	11	3138	.61	1.6	3138	.09	51	58.384
872B/BF63K	11	5300	1.03	1.6	5300	.15	99	57.770
833B/BF63K	11	570	.11	1.6	530	.01	29	59.396
843B/BF63K	11	1300	.26	1.6	1300	.04	37	59.054
863B/BF63K	11	2973	.54	1.6	2973	.08	59	62.319
873B/BF63K	11	5226	.98	1.6	5228	.14	114	61.309
832B/BF71K	10	500	.09	1.4	500	.01	21	65.190
842B/BF71K	10	1485	.25	1.4	1485	.03	29	68.619
862B/BF71K	10	2966	.50	1.4	2966	.07	51	66.358
872B/BF71K	10	5385	.94	1.4	5385	.13	99	64.801
833B/BF71K	10	577	.09	1.4	577	.01	29	71.078
843B/BF71K	10	1427	.23	1.4	1427	.03	37	70.302
863B/BF71K	10	3040	.47	1.4	3040	.07	59	73.093
873B/BF71K	10	5298	.85	1.4	5298	.13	114	73.172

* For applications requiring a service factor greater than 1.0, multiply the design torque or horsepower by the application factor, found on pages 356-358.
Actual Output RPM = Input Speed ÷ Actual Ratio.
For Overhung Load Ratings refer to Page 153.
▭ Indicates Triple Reduction

800 Series Ratio and Capacity Selection Tables

Non-Flanged; Input Speeds 1750, 1450 and 1160 RPM

Service Factor 1.0*

Catalog Number	Input Speed								
	1750 RPM			1450 RPM			1160 RPM		
	Approx. Output RPM	Output Torque (LB-IN)(Max.)	Input HP (Max.)	Approx. Output RPM	Output Torque (LB-IN)(Max.)	Input HP (Max.)	Approx. Output RPM	Output Torque (LB-IN) (Max.)	Input HP (Max.)
833B/BF80K	21	565	0.21	18	565	0.17	14	565	0.14
843B/BF80K	21	1320	0.51	18	1320	0.42	14	1320	0.34
863B/BF80K	21	3038	1.13	18	3038	0.94	14	3038	0.75
873B/BF80K	21	5315	2.01	18	5315	1.66	14	5315	1.33
833B/BF90K	19	575	0.19	16	575	0.15	12	575	0.12
843B/BF90K	19	1395	0.47	16	1395	0.39	12	1395	0.31
863B/BF90K	19	2745	0.98	16	2745	0.82	12	2745	0.65
873B/BF90K	19	5252	1.73	16	5252	1.43	12	5252	1.14
833B/BF100K	17	570	0.17	14	575	0.14	11	575	0.11
843B/BF100K	17	1400	0.42	14	1400	0.35	11	1400	0.28
863B/BF100K	17	3095	0.88	14	3095	0.72	11	3095	0.58
873B/BF100K	17	5252	1.58	14	5252	1.31	11	5252	1.05
833B/BF112K	15	543	0.15	12	540	0.12	10	540	0.10
843B/BF112K	15	1340	0.37	12	1340	0.30	10	1340	0.24
863B/BF112K	15	2820	0.79	12	2820	0.65	10	2820	0.52
873B/BF112K	15	5300	1.37	12	5300	1.14	10	5300	0.91
833B/BF125K	14	523	0.13	11	520	0.11	9.3	520	0.09
843B/BF125K	14	1430	0.33	11	1430	0.27	9.3	1430	0.22
863B/BF125K	14	3000	0.70	11	3000	0.58	9.3	3000	0.46
873B/BF125K	14	5337	1.26	11	5337	1.04	9.3	5337	0.83
833B/BF140K	12	487	0.11	10	487	0.09	8.3	467	0.08
843B/BF140K	12	1360	0.29	10	1360	0.24	8.3	1360	0.20
863B/BF140K	12	2916	0.65	10	2916	0.54	8.3	2916	0.43
873B/BF140K	12	5247	1.11	10	5247	0.92	8.3	5247	0.74
833B/BF160K	10	490	0.10	9.1	490	0.09	7.2	490	0.07
843B/BF160K	10	1410	0.27	9.1	1410	0.22	7.2	1410	0.18
863B/BF160K	10	3130	0.58	9.1	3130	0.48	7.2	3130	0.39
873B/BF160K	10	5280	1.02	9.1	5280	0.84	7.2	5280	0.67
833B/BF180K	9.7	555	0.10	8.0	555	0.08	6.4	555	0.06
843B/BF180K	9.7	1436	0.24	8.0	1436	0.20	6.4	1436	0.16
863B/BF180K	9.7	3146	0.53	8.0	3148	0.44	6.4	3148	0.35
873B/BF180K	9.7	5362	0.92	8.0	5362	0.76	6.4	5362	0.61
833B/BF200K	8.8	568	0.09	7.3	555	0.07	5.8	555	0.06
843B/BF200K	8.8	1428	0.21	7.3	1428	0.17	5.8	1428	0.14
863B/BF200K	8.8	3173	0.47	7.3	3173	0.39	5.8	3173	0.31
873B/BF200K	8.8	5432	0.82	7.3	5432	0.68	5.8	5432	0.55
833B/BF225K	7.8	544	0.08	6.4	544	0.07	5.2	544	0.05
843B/BF225K	7.8	1410	0.19	6.4	1410	0.16	5.2	1410	0.13
863B/BF225K	7.8	3146	0.44	6.4	3146	0.36	5.2	3146	0.29
873B/BF225K	7.8	5341	0.75	6.4	5341	0.62	5.2	5341	0.50
833B/BF250K	7.0	540	0.07	5.8	540	0.06	4.6	540	0.05
843B/BF250K	7.0	1410	0.17	5.8	1410	0.14	4.6	1410	0.11
863B/BF250K	7.0	3110	0.39	5.8	3110	0.32	4.6	3110	0.26
873B/BF250K	7.0	5423	0.67	5.8	5423	0.56	4.6	5423	0.45

* For applications requiring a service factor greater than 1.0, multiply the design torque or horsepower by the application factor, found on pages 356-358.
Actual Output RPM = Input Speed ÷ Actual Ratio.
For Overhung Load Ratings refer to Page 153.
▭ Indicates Triple Reduction

Non-Flanged; Input Speeds 690 and 100 RPM

Service Factor 1.0*

Catalog Number	Input Speed						Approx. Wt. (LB)	Actual Gear Ratio
	690 RPM			100 RPM				
	Approx. Output RPM	Output Torque (LB-IN)(Max.)	Input HP (Max.)	Approx. Output RPM	Output Torque (LB-IN)(Max.)	Input HP (Max.)		
833B/BF80K	8.6	565	.08	1.25	565	.01	29	79.506
843B/BF80K	8.6	1320	.19	1.25	1320	.03	37	76.483
863B/BF80K	8.6	3038	.43	1.25	3038	.06	59	79.466
873B/BF80K	8.6	5315	.77	1.25	5315	.11	114	78.141
833B/BF90K	7.7	575	.07	1.25	575	.01	29	89.460
843B/BF90K	7.7	1395	.18	1.25	1395	.03	37	87.686
863B/BF90K	7.7	2745	.38	1.25	2745	.05	59	82.764
873B/BF90K	7.7	5252	.66	1.25	5252	.10	114	89.712
833B/BF100K	6.9	575	.06	1.25	575	.01	29	99.401
843B/BF100K	6.9	1400	.16	1.25	1400	.02	37	98.820
863B/BF100K	6.9	3095	.33	1.25	3095	.05	59	103.962
873B/BF100K	6.9	5252	.61	1.25	5252	.09	114	98.233
833B/BF112K	6.2	540	.06	.89	540	.01	29	107.054
843B/BF112K	6.2	1340	.14	.89	1340	.02	37	113.691
863B/BF112K	6.2	2820	.30	.89	2820	.04	59	105.536
873B/BF112K	6.2	5300	.53	.89	5300	.08	114	114.319
833B/BF125K	5.5	520	.05	.80	520	.01	29	118.950
843B/BF125K	5.5	1430	.13	.80	1430	.02	37	128.128
863B/BF125K	5.5	3000	.27	.80	3000	.04	59	127.052
873B/BF125K	5.5	5337	.48	.80	5337	.07	114	125.178
833B/BF140K	5.0	487	.05	.71	487	.01	29	131.034
843B/BF140K	5.0	1360	.11	.71	1360	.02	37	138.931
863B/BF140K	5.0	2916	.25	.71	2916	.04	59	132.567
873B/BF140K	5.0	5247	.43	.71	5247	.06	114	139.695
833B/BF160K	4.3	490	.04	.62	490	.01	29	145.595
843B/BF160K	4.3	1410	.10	.62	1410	.01	37	156.574
863B/BF160K	4.3	3130	.22	.62	3130	.03	59	159.582
873B/BF160K	4.3	5280	.40	.62	5280	.06	114	152.964
833B/BF180K	3.8	555	.04	.55	555	.01	29	164.184
843B/BF180K	3.8	1436	.09	.55	1436	.01	37	176.854
863B/BF180K	3.8	3148	.20	.55	3148	.03	59	175.553
873B/BF180K	3.8	5362	.36	.55	5362	.05	114	172.231
833B/BF200K	3.4	555	.03	.50	555	.01	29	186.590
843B/BF200K	3.4	1428	.08	.50	1428	.01	37	200.989
863B/BF200K	3.4	3173	.18	.50	3173	.03	59	199.528
873B/BF200K	3.4	5432	.33	.50	5432	.05	114	195.757
833B/BF225K	3.1	544	.03	.44	544	.01	29	200.962
843B/BF225K	3.1	1410	.07	.44	1410	.01	37	216.098
863B/BF225K	3.1	3146	.17	.44	3146	.02	59	211.326
873B/BF225K	3.1	5341	.29	.44	5341	.41	114	210.462
833B/BF250K	2.76	540	.03	.40	540	.01	29	228.387
843B/BF250K	2.76	1410	.06	.40	1410	.01	37	245.633
863B/BF250K	2.76	3110	.15	.40	3110	.02	59	240.188
873B/BF250K	2.76	5423	.26	.40	5423	.04	114	239.210

* For applications requiring a service factor greater than 1.0, multiply the design torque or horsepower by the application factor, found on pages 356-358.
Actual Output RPM = Input Speed ÷ Actual Ratio.
For Overhung Load Ratings refer to Page 153.
▭ Indicates Triple Reduction

800 Series In-Line Helical Gear Drive Dimensions

F800B Series Double Reduction; NEMA C-Face Input

Foot Mounted



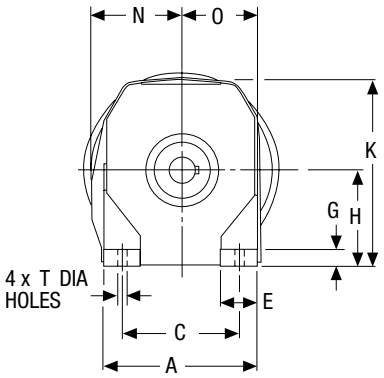

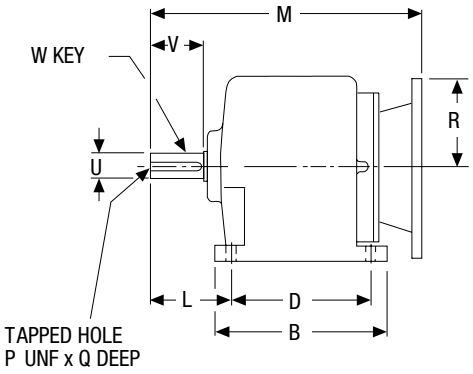

Size	A	B	C	D	E	G	H	K	L	N	O	P	Q	T
F832B	5.44	4.33	4.33	3.35	1.05	.48	2.95	5.79	2.28	3.16	2.84	1/4	.63	.39
F842B	5.71	6.30	4.33	5.12	1.48	.67	3.54	6.99	2.95	3.31	2.95	1/4	.63	.39
F862B	7.48	7.87	5.31	6.50	2.19	.81	4.53	9.06	3.54	4.13	3.87	3/8	.87	.59
F872B	9.06	9.65	6.69	8.07	2.64	1.03	5.51	10.83	4.53	5.12	4.69	5/8	1.38	.75

	Low Speed Shaft				M				R			
			W-Key		NEMA Mounting				NEMA Mounting			
					56C	140TC	180TC	210TC	56C	140TC	180TC	210TC
Size	U +.000 -.001	V	Sq.	Lgth.	B5	B7	B9	B11	B5	B7	B9	B11
F832B	.750	1.57	.19	1.28	9.82	9.82	10.65	—	3.31	3.31	4.63	—
F842B	1.000	1.97	.25	1.75	10.73	10.73	11.55	—	3.31	3.31	4.63	—
F862B	1.250	2.36	.25	2.00	12.26	12.26	14.61	14.61	3.31	3.31	4.63	4.63
F872B	1.625	3.15	.38	2.37	15.15	15.15	16.76	16.76	3.31	3.31	4.63	4.63

Output shaft rotation, relative to input shaft rotation, is identical for double reduction and opposite for triple reduction.

F800B Series Triple Reduction; NEMA C-Face Input
Foot Mounted

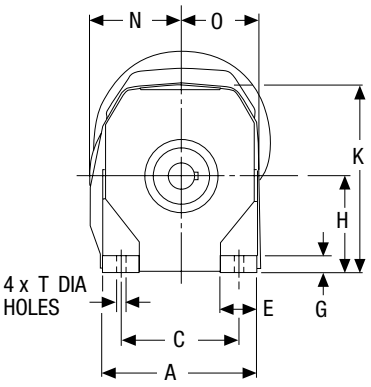

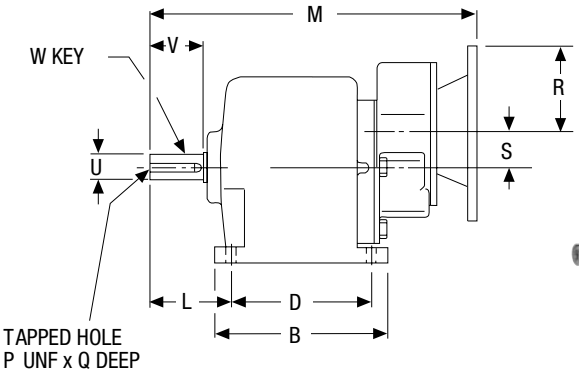



G

Size	A	B	C	D	E	G	H	K	L	N	O	P	Q	S
F833B	5.44	4.33	4.33	3.35	1.05	.48	2.95	5.79	2.28	3.16	2.84	1/4	.63	1.40
F843B	5.71	6.30	4.33	5.12	1.48	.67	3.54	6.99	2.95	3.31	2.95	1/4	.63	1.40
F863B	7.48	7.87	5.31	6.50	2.19	.81	4.53	9.06	3.54	4.13	3.87	3/8	.87	1.83
F873B	9.06	9.65	6.69	8.07	2.64	1.03	5.51	10.83	4.53	5.12	4.69	5/8	1.38	2.34

		Low Speed Shaft				M			R		
				W-Key		NEMA Mounting			NEMA Mounting		
						56C	140TC	180TC	56C	140TC	180TC
Size	T	U +.000 -.001	V	Sq.	Lgth.	B5	B7	B9	B5	B7	B9
F833B	.39	.750	1.57	.19	1.28	12.03	—	—	3.31	—	—
F843B	.39	1.000	1.97	.25	1.75	12.94	—	—	3.31	—	—
F863B	.59	1.250	2.36	.25	2.00	15.38	15.38	—	3.31	3.31	—
F873B	.75	1.625	3.15	.38	2.37	18.28	18.28	20.63	3.31	3.31	4.63

Output shaft rotation, relative to input shaft rotation, is identical for double reduction and opposite for triple reduction.

F800BF Series Double Reduction; NEMA C-Face Input

Output Flange Mounted



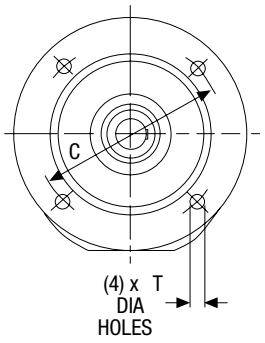

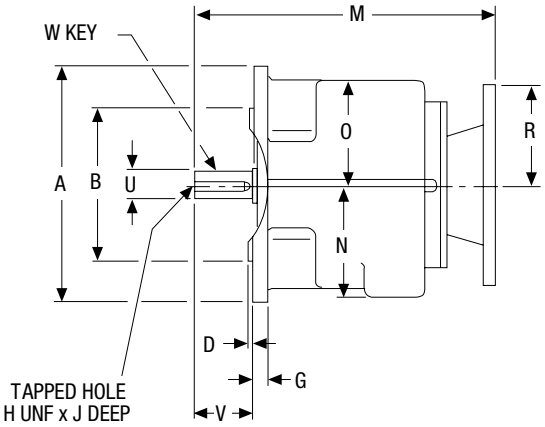

Size	A	B +.000 -.003	C	D	G	H	J	N	O	T
F832BF	6.30	4.330	5.12	.14	.28	1/4	.63	3.15	2.76	.39
F842BF	7.87	5.118	6.50	.14	.47	1/4	.63	3.74	3.46	.47
F862BF	9.84	7.086	8.46	.16	.47	3/8	.87	4.45	4.53	.59
F872BF	11.81	9.055	10.43	.16	.55	5/8	1.38	5.43	5.43	.59

Size	Low Speed Shaft				M				R			
	U +.000 -.001	V	W-Key		NEMA Mounting				NEMA Mounting			
			Sq.	Lgth.	56C B5	140TC B7	180TC B9	210TC B11	56C B5	140TC B7	180TC B9	210TC B11
F832BF	.750	1.57	.19	1.28	9.82	9.82	10.65	—	3.31	3.31	4.63	—
F842BF	1.000	1.97	.25	1.75	10.73	10.73	11.55	—	3.31	3.31	4.63	—
F862BF	1.250	2.36	.25	2.00	12.26	12.26	14.61	14.61	3.31	3.31	4.63	4.63
F872BF	1.625	3.15	.38	2.37	15.15	15.15	16.76	16.76	3.31	3.31	4.63	4.63

Output shaft rotation, relative to input shaft rotation, is identical for double reduction and opposite for triple reduction.

F800BF Series Triple Reduction; NEMA C-Face Input

Output Flange Mounted

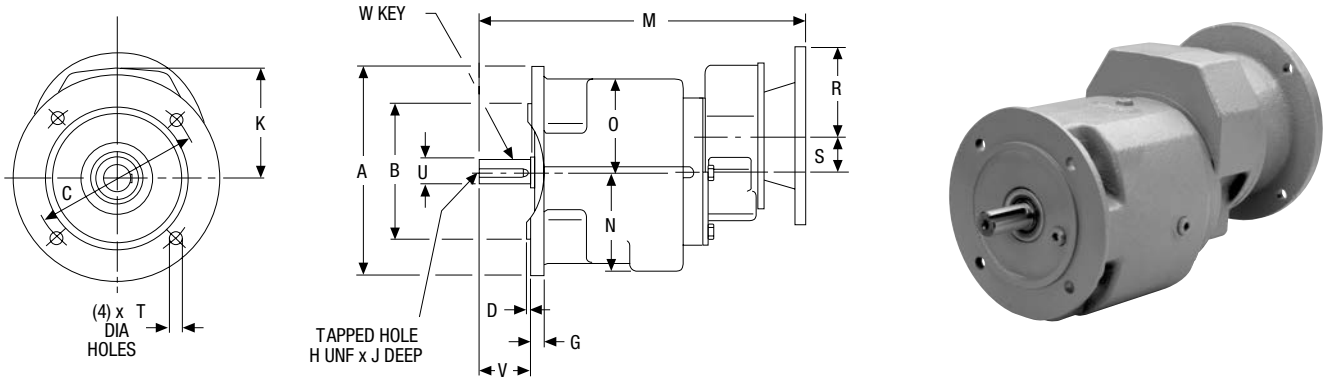

Size	A	B +.000 -.003	C	D	G	H	J	K	N	O	S
F833BF	6.30	4.330	5.12	.14	.28	1/4	.63	4.17	3.15	2.76	1.40
F843BF	7.87	5.118	6.50	.14	.47	1/4	.63	4.17	3.74	3.46	1.40
F863BF	9.84	7.086	8.46	.16	.47	3/8	.87	4.45	4.45	4.53	1.83
F873BF	11.81	9.055	10.43	.16	.55	5/8	1.38	5.43	5.43	5.43	2.34

Size	T	Low Speed Shaft				M			R		
		U +.000 -.001	V	W-Key		NEMA Mounting			NEMA Mounting		
				Sq.	Lgth.	56C B5	140TC B7	180TC B9	56C B5	140TC B7	180TC B9
F833BF	.39	.750	1.57	.19	1.28	12.03	—	—	3.31	—	—
F843BF	.47	1.000	1.97	.25	1.75	12.94	—	—	3.31	—	—
F863BF	.59	1.250	2.36	.25	2.00	15.38	15.38	—	3.31	3.31	—
F873BF	.59	1.625	3.15	.38	2.37	18.28	18.28	20.63	3.31	3.31	4.63

Output shaft rotation, relative to input shaft rotation, is identical for double reduction and opposite for triple reduction.

800 Series In-Line Helical Gear Drive Dimensions

800B Series Double Reduction; Non-Flanged

Foot Mounted

G

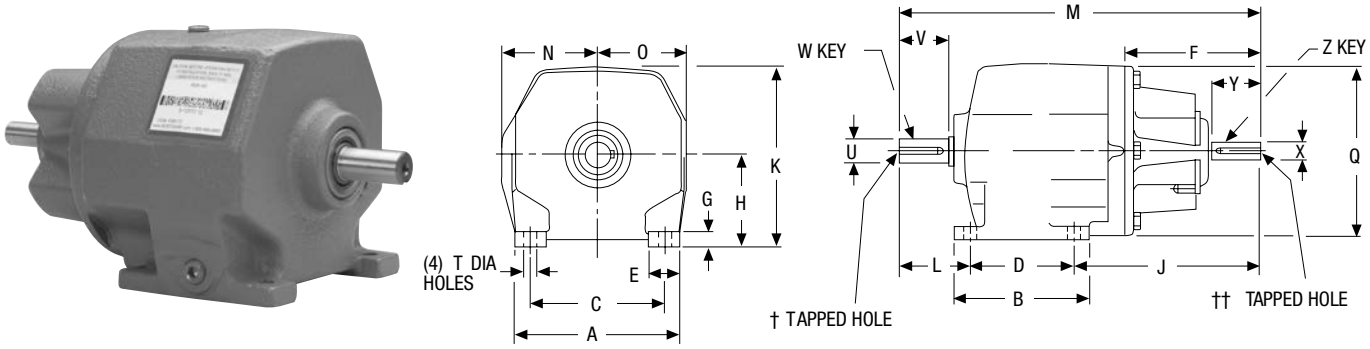

Size	A	B	C	D	E	F	G	H	J	K	L	M	N
832B	5.44	4.33	4.33	3.35	1.05	4.37	.48	2.95	5.94	5.79	2.28	11.57	3.16
842B	5.71	6.30	4.33	5.12	1.48	4.37	.67	3.54	4.41	6.99	2.95	12.48	3.31
862B	7.48	7.87	5.31	6.50	2.19	4.37	.81	4.53	4.49	9.06	3.54	14.53	4.13
872B	9.06	9.65	6.69	8.07	2.64	4.53	1.03	5.51	4.72	10.83	4.53	17.32	5.12

				Low Speed Shaft				High Speed Shaft			
				U		W-Key		X		Z-Key	
Size	O	Q	T	+.000 -.001	V	Sq.	Lgth.	+.000 -.001	Y	Sq.	Lgth.
832B	**2.84**	**5.51**	**.39**	.750	1.57	.19	1.28	.625	1.57	.19	1.28
842B	**2.95**	**5.51**	**.39**	1.000	1.97	.25	1.75	.625	1.57	.19	1.28
862B	**3.87**	**7.09**	**.59**	1.250	2.36	.25	2.00	.750	1.57	.19	1.28
872B	**4.69**	**8.46**	**.75**	1.625	3.15	.38	2.37	.875	1.97	.19	1.28

Output shaft rotation, relative to input shaft rotation, is identical for double reduction and opposite for triple reduction.
† 832B 1/4 UNF x 0.63 DP, 842B 1/4UNF x 0.63 DP. Size 862B 3/8 UNF x 0.87 DP. Size 872B 5/8 UNF x 1.38 DP.
††832B 1/4 UNF x 0.49 DP, 842B 1/4 UNF x 0.49 DP. Size 862B 1/4 UNF x 0.63 DP. Size 872B 5/16 UNF x 0.63 DP.

800B Series Triple Reduction; Non-Flanged

Foot Mounted

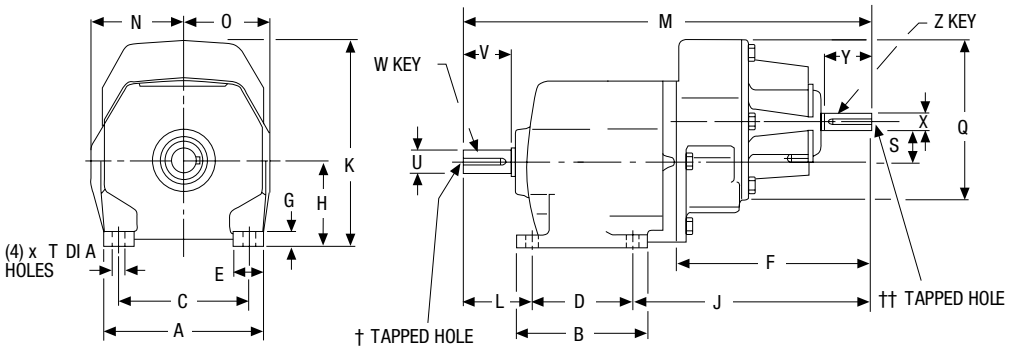



G

Size	A	B	C	D	E	F	G	H	J	K	L	M	N
833B	5.44	4.33	4.33	3.35	1.05	6.57	.48	2.95	8.15	7.13	2.28	13.78	3.16
843B	5.71	6.30	4.33	5.12	1.48	6.57	.67	3.54	6.61	7.72	2.95	14.69	3.31
863B	7.48	7.87	5.31	6.50	2.19	6.97	.81	4.53	7.09	9.13	3.54	17.13	4.13
873B	9.06	9.65	6.69	8.07	2.64	7.76	1.03	5.51	7.95	11.42	4.53	20.55	5.12

					Low Speed Shaft				High Speed Shaft			
					U		W-Key		X		Z-Key	
Size	O	Q	S	T	+.000 -.001	V	Sq.	Lgth.	+.000 -.001	Y	Sq.	Lgth.
833B	2.84	5.51	1.40	.39	.750	1.57	.19	1.28	.625	1.57	.19	1.28
843B	2.95	5.51	1.40	.39	1.000	1.97	.25	1.75	.625	1.57	.19	1.28
863B	3.87	5.51	1.83	.59	1.250	2.36	.25	2.00	.625	1.57	.19	1.28
873B	4.69	7.09	2.34	.75	1.625	3.15	.38	2.37	.750	1.57	.19	1.28

Output shaft rotation, relative to input shaft rotation, is identical for double reduction and opposite for triple reduction.
† Size 833B 1/4 UNF x 0.63 DP, 843 1/4 UNF x 0.63 DP, 863B 3/8 UNF x 0.87 DP. Size 873B 5/8 UNF x 1.38 DP.
†† Size 833B 1/4 UNF x 0.49 DP, 843 1/4 UNF x 0.49 DP, 863B 1/4 UNF x 0.63 DP. Size 873B 5/16 UNF x 0.63 DP.

800 Series In-Line Helical Gear Drive Dimensions

800BF Series Double Reduction; Non-Flanged

Output Flange Mounted



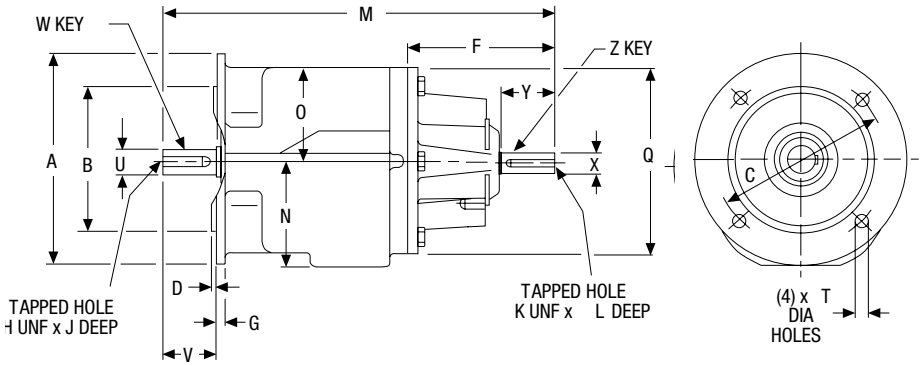

Size	A	B +.000 -.003	C	D	F	G	H	J	K	L	M	N
832BF	6.30	4.331	5.12	.14	4.37	.28	1/4	.63	1/4	.49	11.57	3.15
842BF	7.87	5.118	6.50	.14	4.37	.47	1/4	.63	1/4	.49	12.48	3.74
862BF	9.84	7.087	8.46	.16	4.37	.47	3/8	.87	1/4	.63	14.53	4.45
872BF	11.81	9.055	10.43	.16	4.53	.55	5/8	1.38	5/16	.63	17.32	5.43

				Low Speed Shaft				High Speed Shaft			
				U +.000 -.001		W-Key		X +.000 -.001		Z-Key	
Size	O	Q	T		V	Sq.	Lgth.		Y	Sq.	Lgth.
832BF	**2.76**	**5.51**	**.39**	.750	1.57	.19	1.28	.6250	1.57	.19	1.28
842BF	**3.46**	**5.51**	**.47**	1.000	1.97	.25	1.75	.6250	1.57	.19	1.28
862BF	**4.53**	**7.09**	**.59**	1.250	2.36	.25	2.00	.7500	1.57	.19	1.28
872BF	**5.43**	**8.35**	**.59**	1.625	3.15	.38	2.37	.8750	1.97	.19	1.28

Output shaft rotation, relative to input shaft rotation, is identical for double reduction and opposite for triple reduction.

800BF Series Triple Reduction; Non-Flanged

Output Flange Mounted

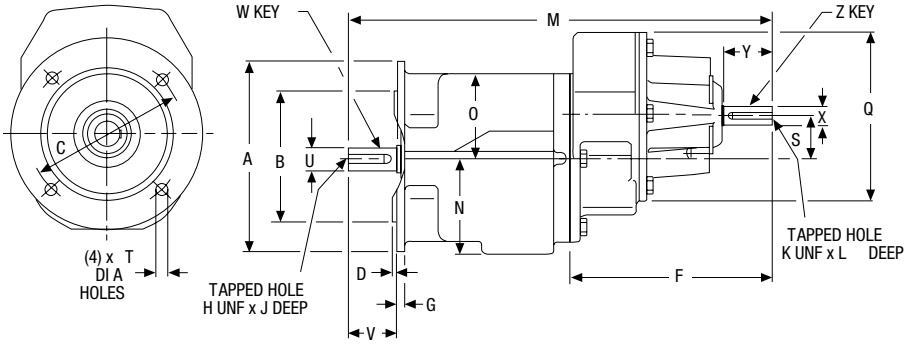

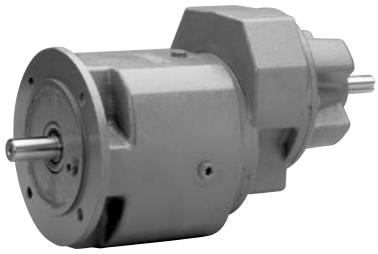

Size	A	B +.000 -.003	C	D	F	G	H	J	K	L	M	N
833BF	6.30	4.331	5.12	.14	6.57	.28	1/4	.63	1/4	.49	13.78	3.15
843BF	7.87	5.118	6.50	.14	6.57	.47	1/4	.63	1/4	.49	14.69	3.74
863BF	9.84	7.087	8.46	.16	6.97	.47	3/8	.87	1/4	.63	17.13	4.45
873BF	11.81	9.055	10.43	.16	7.76	.55	5/8	1.38	5/16	.63	20.55	5.43

Size	O	Q	S	T	Low Speed Shaft				High Speed Shaft			
					U +.000 -.001	V	W-Key		X +.000 -.001	Y	Z-Key	
							Sq.	Lgth.			Sq.	Lgth.
833BF	2.76	5.51	1.40	.39	.750	1.57	.19	1.28	.625	1.57	.19	1.28
843BF	3.46	5.51	1.40	.47	1.000	1.97	.25	1.75	.625	1.57	.19	1.28
863BF	4.53	5.51	1.83	.59	1.250	2.36	.25	2.00	.625	1.57	.19	1.28
873BF	5.43	7.09	2.34	.59	1.625	3.15	.38	2.37	.750	1.57	.19	1.28

Output shaft rotation, relative to input shaft rotation, is identical for double reduction and opposite for triple reduction.



Boston Gear's Bost-Kleen and Stainless Bost-Kleen reducers assure contamination-safe operation in the most stringent environmental conditions.

White Bost-Kleen™

- Washable and Scrubbable
- Corrosion Resistant
- Durable White Epoxy Finish
- Includes all the standard 800 features
- Limited Lifetime Warranty
- Cast Iron Housing
- Plated Pressure Relief Valves Standard
- Standard NEMA C-face or projecting input shaft configurations
- Single, Double and Triple reduction ratios from 1:5:1 to 250:1

Available options on BK and SBK

- Stainless Steel Output Shafts
- Premounted Stainless Washdown Motors
- Prelubrication from the factory see page 16 for a complete list of lubrication options
- Exposed hardware made of stainless steel.

Stainless Bost-Kleen

- Includes all the features of the standard white Bost-Kleen reducers
- U.S.D.A. approved for use in food processing and handling industry where incidental food contact may occur
- Excluder seal on solid output shaft units
- Durable stainless steel epoxy coating system utilizes a unique #316L stainless steel leafing pigment. This catalyzed system creates a hard, non-toxic metallic finish

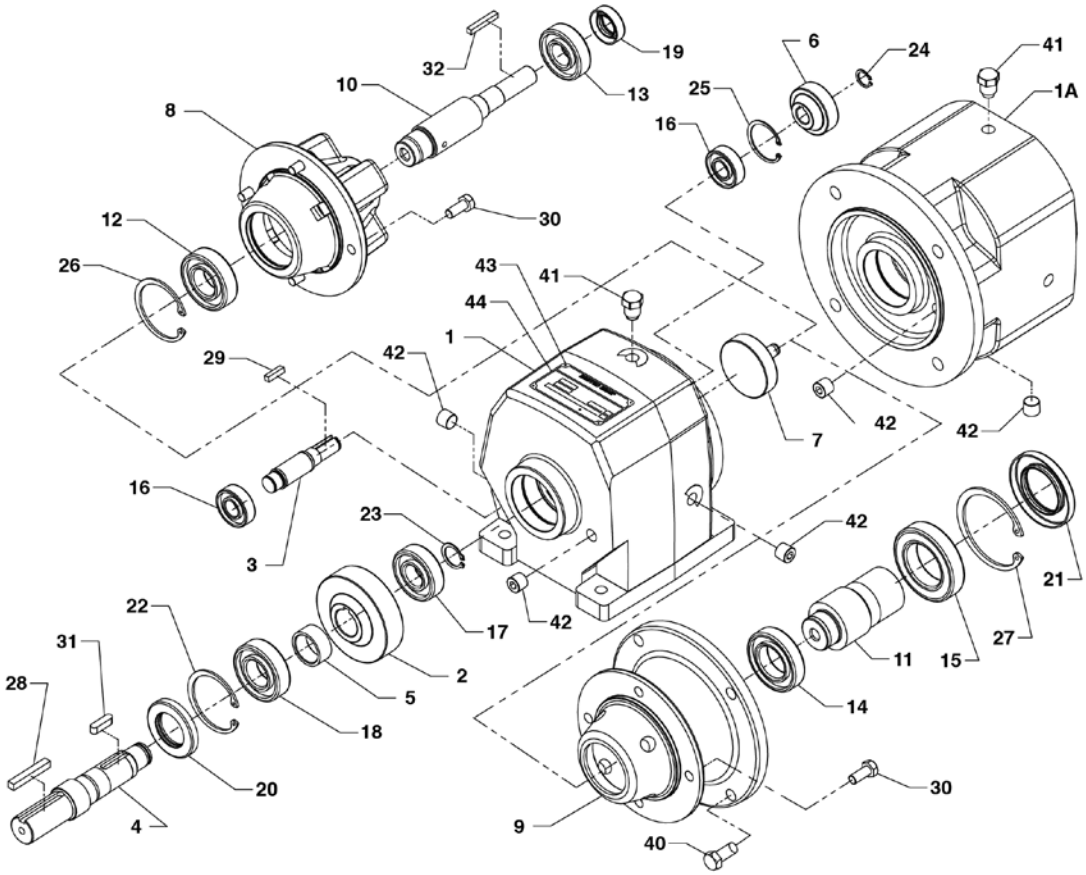

Item No.	Description of Part
1	HOUSING, BASE MOUNT
1A	HOUSING, FLANGE MOUNT
2	HELICAL GEAR OUTPUT
3	HELICAL PINION, OUTPUT
4	OUTPUT SHAFT
5	OUTPUT SPACER
6	HELICAL GEAR, 1ST RED
7	HELICAL PINION, 1ST RED
8	INPUT BEARING CARRIER
9	MOTOR FLANGE (B5/B7-B9/B11)
10	INPUT REDUCER SHAFT
11	INPUT MOTOR SHAFT
12	BEARING, INPUT SHAFT (INBOARD)
13	BEARING, INPUT SHAFT (OUTBOARD)
14	BEARING, MOTOR SHAFT (INBOARD)
15	BEARING, MOTOR SHAFT (OUTBOARD)
16	BEARING, OUTPUT PINION
17	BEARING, OUTPUT SHAFT (INBOARD)
18	BEARING, OUTPUT SHAFT (OUTPUT)
19	OIL SEAL, INPUT REDUCTOR SHAFT
20	OIL SEAL, OUTPUT SHAFT
21	OIL SEAL, INPUT MOTOR SHAFT
22	RETAINING RING, OUTPUT (HOUSING)
23	RETAINING RING, OUTPUT (SHAFT)
24	RETAINING RING, OUTPUT PINION
25	RETAINING RING, OUTPUT PINION BORE
26	RETAINING RING, INPUT CARRIER
27	RETAINING RING, B5/B7-B9/B11 FLANGE
28	KEY, OUTPUT SHAFT PROJECTION
29	KEY, OUTPUT PINION
30	HEX HEAD CAP SCREWS

Triple Module

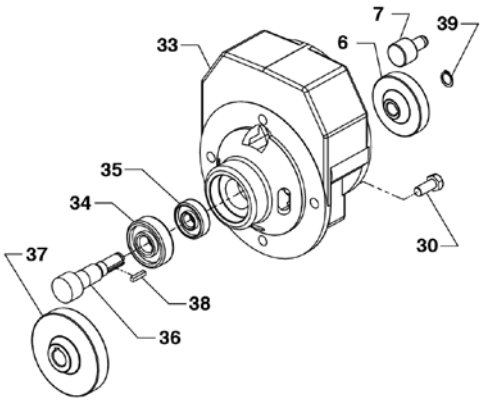

Item No.	Description of Part
31	KEY, OUTPUT SHAFT
32	KEY, INPUT REDUCTOR
33	TRIPLE HOUSING ADAPTER
34	BEARING
35	BEARING
36	HELICAL PINION, 2ND REDUCTOR
37	HELICAL GEAR, 2ND REDUCTOR
38	KEY
39	RING
40	HEX HEAD CAP SCREW
41	PLUG, OIL VENT
42	PLUG, PIPE
43	NAMEPLATE TAPE
44	NAMEPLATE

Notes



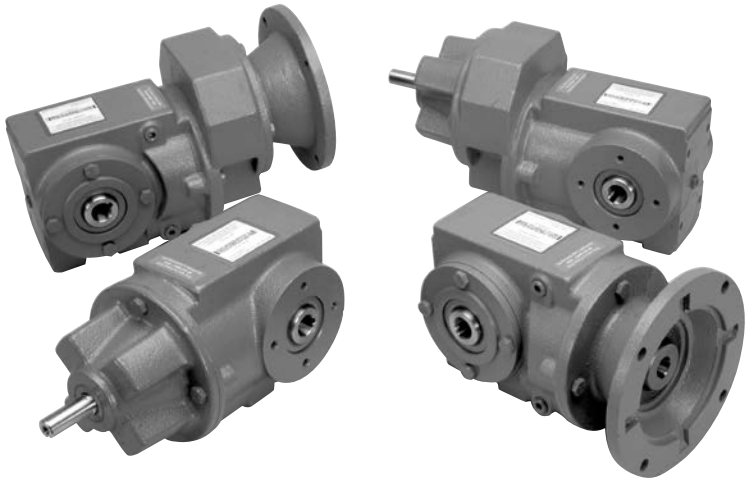

Easy to Select, Easy to Apply, Easy to Obtain

The Boston Gear 800BR Series contains a broad selection of compact, heavy-duty helical gear drives, with long life performance features and simplified maintenance. Models include double and triple reduction units in flanged or foot mounted arrangements. You can choose from a wide range of reduction ratios to suit specific applications and a variety of input shaft configurations for maximum positioning flexibility. All units are adaptable to floor, sidewall or ceiling mounting.

Two Available USDA Approved Finishes

- Durable non-absorbent, non-toxic white (BK) or stainless epoxy finish (SBK)
- Washable & Scrubbable
- Includes all the standard 800BR features





H

Section Contents

Product Reference Guide 198

Interchange / How to Order 199-201

Selection Procedure 202-203

Overhung Load / Weights 204

Lubrication / Mounting 205-206

Flanged Gear Drive Ratings 207-221

Non-Flanged Gear Drive Ratings 222-231

Flanged Gear Drive Dimensions 232-233

Non-Flanged Gear Drive Dimensions 234-235

Accesories / Parts List 236-238

800 Series Helical Gear Drives

SF800BR Series Right Angle Helical Worm Flanged



Double Reduction
Flange Input
Selection Pages 207-221
Dimensions-Page 232



Triple Reduction
Flange Input
Selection Pages 207-221
Dimensions-Page 233

SF800BR Series Right Angle Helical Worm Non-Flanged



Double Reduction
Selection Pages 207-221
Dimensions-Page 234

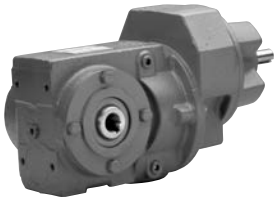

Triple Reduction
Selection Pages 207-221
Dimensions-Page 235

SF/S800BR Series Accessories and Options



Output Flange Kits
Dimensions-Page 236



Torque Arm Kits
Dimensions-Page 236



Base Kits
Dimensions-Page 237



Output Shaft Kits
Dimensions-Page 237

H

The Inside Story

Available in USDA approved finish for washdown applications

Oil seal location provides easy, access for routine product maintenance. Additionally, all sizes can be double sealed on the high speed shaft for severe applications.

All units shipped prelubricated for your particular mounting position.

Available in both standard NEMA C-Face flanged and direct input non-flanged configurations. NEMA C-Face units allow for direct assembly of the reducer and motor.

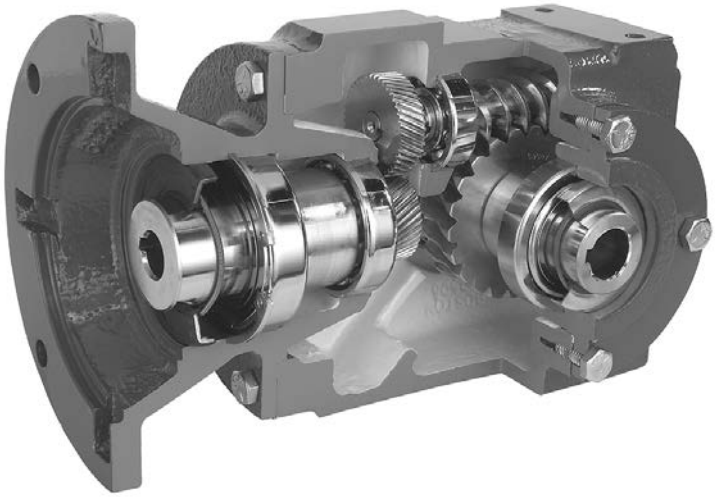

Rugged housing of fine grained, gear quality cast iron provides maximum strength and durability.

The use of state of the art helical and worm gear combinations affords optimum performance fulfilling a wide variety of ratio requirements.

H

Available in both hollow and projecting output shaft styles.

Modular base allows dimensional interchangability with major European manufacturers.

A wide range of available gear reduction ratios, from 8:1 to 900:1, allows the 800BR Series to fulfill a broad range of output speed requirements.

Super finished oil seal diameter on both input and output shafts provide extended life for double lipped seals.



See page 362 for conditions.

800 Series Right Angle Helical Worm Gear Drives

Interchange Guide

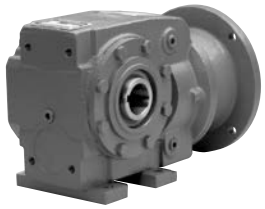

Base Mounted NEMA C-Face SF800BRB



Base Mounted S800BRB



Output Flange Mount NEMA C-Face SF800BRF



Output Flange Mount S800BRF

Boston Gear 800BR Series Right Angle Helical-Worm Gear Drives are designed to be functionally interchangeable with these and many other manufacturer's drives. This chart is intended to be a guide only. Please see appropriate manufacturer's catalogs for exact details regarding ratings and dimensions.

H

Manufacturers	Size	Base Mounted* NEMA C-Face SF800BRB	Base Mounted* S800BRB	Output Flange Mount NEMA C-Face SF800BRF	Output Flange Mount S800BRF
Boston	830	SF832BRB/SF833BRB	S832BRB/S833BRB	SF832BRF/SF833BRF	S832BRF/S833BRF
SEW Eurodrive	32	SA32LP	SA32	SAF32LP	SAF32
Falk	03	UWCQ2(3)-A	UWCQ2(3)-N	UWCQ2(3)-A	UWCQ2(3)-N
David Brown	C03	C032(3)BAN	C032(3)BRN	C032(3)BAF	C032(3)BRF
Flender	NA	Not Available	Not Available	Not Available	Not Available
Stober	S102	S102VN-MR	S102VN-AW	S102AF-MR	S102AF-AW
Nord	N/A	Not Available	Not Available	Not Available	Not Available
Boston	840	SF842BRB/SF843BRB	S842BRB/S843BRB	SF842BRF/SF843BRF	S842BRF/S843BRF
SEW Eurodrive	42	SA42LP	SA42	SAF42LP	SAF42
Falk	04	UWCQ2(3)-A	UWCQ2(3)-N	UWCQ2(3)-A	UWCQ2(3)-N
David Brown	C04	C042(3)BAN	C042(3)BRN	C042(3)BAF	C042(3)BRF
Flender	21	CA21-(M,G, or A)	CA21A	CF21- (M, G or A)	CF21A
Stober	S200	S202/3VN-MR	S202/3VN-AW	S202/3AF-MR	S202/3AF-AW
Nord	SK04	SK02040A	SK02040A	SK02040AF	SK02040AF-W
Boston	850	SF852BRB/SF853BRB	S852BRB/S853BRB	SF852BRF/SF853BRF	S852BRF/S853BRF
SEW Eurodrive	52	SA52LP	SA52	SAF52LP	SAF52
Falk	05	UWCQ2(3)-A	UWCQ2(3)-N	UWCQ2(3)-A	UWCQ2(3)-N
David Brown	C05	C052(3)BAN	C052(3)BRN	C052(3)BAF	C052(3)BRF
Flender	41	CA41- (M,G, or A)	CA41A	CF41-(M, G or A)	CF41A
Stober	S300	S302/3VN-MR	S302/3VN-AW	S302/3AF-MR	S302/3AF-AW
Nord	SK05	SK02(13)050A	SK02(13)050A-W	SK02(13)050AF	SK02(13)050AF
Boston	860	SF862BRB/SF863BRB	S862BRB/S863BRB	SF862BRF/SF863BRF	S862BRF/S863BRF
SEW Eurodrive	62	SA62LP	SA62	SAF62LP	SAF62
Falk	06	UWCQ2(3)-A	UWCQ2(3)-N	UWCQ2(3)-A	UWCQ2(3)-N
David Brown	C06	C062(3)BAN	C062(3)BRN	C062(3)BAF	C062(3)BRF
Flender	61	CA61- (M,G or A)	CA61A	CF61-(M, G or A)	CF61A
Stober	S400	S402/3VN-MR	S402/3VN-AW	S402/3AF-MR	S402/3AF-AW
Nord	SK06	SK12(3)063A	SK12(3)063A-W	SK23(3)063AF-W	SK23(3)063AF-W

* Detachable base kit required. See page 237.

If you require assistance with an interchange, please contact our interchange hotline at 1-888-999-9860 ext 5335.

Numbering System / How to Order

800 Series Right Angle Helical Worm Gear Drives | **Clutch/Brake** | **Motor**

BK SF 8 3 2 BR F – 45 K T – B5 – G –M2 – CMBA56U-6 – HUTF5/8-IDB – 3

Series
800BR Series

Frame Size
3
4
5
6

Input Shaft Style
S – Solid Projecting Input Shaft
SF – Quill Style C-Face Motor Flange

Base/Mounting Attachment
Blank–Foot Mounted
B – Detachable Base
F – Output Flange
T – Torque Arm

Nominal Gear Ratio
(Rounded Value)
Refer to Selection Tables For Available Ratios

Reduction Type
2 – Double
3 – Triple

Input Oil Seal
Blank–Standard Seal
T –Two Standard Seals

Lubrication
Blank–No Lubrication
K – Klubersynth UH1 6-460
W – Klubersynth GH6
S – Mobil SHC 634
X – Mobil 600W
(Sizes 3 and 4 are non-vented)

Reducer Material/Paint
Blank–Cast Iron, Std Gray Paint
BK – Cast Iron, White *BostKleen* Paint
SBK – Cast Iron, Stainless *BostKleen* Paint

NEMA Motor Mounting

BORE CODE	NEMA MOUNTING	INPUT BORE	KEYWAY
B5	56C	.625	3/16 x 3/32
B7	140TC/180C	.875	3/16 x 3/32
B9	180TC/210C	1.125	1/4 x 1/8
B11	210TC/250UC	1.375	5/16 x 5/32

Blank Solid Input Shaft (No Flange)

Output Shaft Projection
Blank– Carbon Steel Hollow Shaft
G – Carbon Steel Left Projection
H – Carbon Steel Double Projection
J – Carbon Steel Right Projection
S – Stainless Hollow Shaft
GS – Stainless Left Projection
HS – Stainless Double Projection
JS – Stainless Right Projection

Mounting Positions
Blank–No Lubrication
M1-M6– Lubrication per Mounting Positions in Catalog

Common C-Face Brake Installed

115/230 VAC 60hz	Ft-Lb	Bore Code
CMBA56R-3	3	B5
CMBA56R-6	6	B5
CMBA140TR-6	6	B7
208-230/460 VAC 60hz	**Ft-Lb**	**Bore Code**
CMBA56U-3	3	B5
CMBA56U-6	6	B5
CMBA140TU-6	6	B7

Other sizes available. See catalog.

Motor Conduit Box Orientation
(When looking at fan end of motor)
0 – 12 O'clock
3 – 3 O'clock
6 – 6 O'clock
9 – 9 O'clock

Common C-Face Motors Installed

AC Voltage	Bore Code	115/208-230-1-60	208-230/460-3-60
1/4 HP	B5	DRTFB	DUTFB
1/3 HP	B5	ERTFB	EUTFB
1/2 HP	B5	FRTFB	FUTFB
	B5		FUT-SS
	B5		FUTF-IDB
3/4 HP	B5	GRTFB	GUTFB
	B5		GUT-SS
	B5		GUTF-IDB
1 HP	B5	HRTF-5/8B	HUTF5/8B
	B5		HUT5/8-SS
	B5		HUTF5/8-IDB
	B7	HUTFB	HUTFB
	B7		HUT-SS
	B7		HUTF-IDB
1.5 HP	B7	JUTFB	JUTFB
	B7		JUTF-SS
	B7		JUTF-IDB
2 HP	B5	KUTF5/8B	KUTF5/8B
	B7	KUTFB	KUTFB
	B7		KUTF-SS
	B7		KUTF-IDB
3 HP	B9	LUTFB	LUTFB
	B9		LUTF-SS
	B9		LUTF-IDB
5 HP	B9	MUTFB	MUTFB

Other motors available, please see catalog.

T – Totally enclosed non-ventilated
TF – Totally enclosed fan cooled
SS – Stainless
IDB – Inverter Duty (10:1 turn down constant torque)
B5 – 56C
B7 – 140TC
B9 – 180TC

How to Order

EXAMPLE:

Required flange input, NEMA 56C, 3/4 HP, Class I, detachable base, 45:1 ratio, lubricated, with double output shaft and standard mounting position.

Order:
1 pc SF832BR-45K-B5
or item code F01425

1 pc XS830BR-11K (Base Kit)
or 5 digit item code 59610

1 pc XS830BR-3PBK (Output Shaft)
or 5 digit item code 59609

If components are to be factory assembled specify as SF832BRB-45K B5 H.

H

Motorized Gear Drives

1. Determine application service factor from page 203 or from Application Classifications on page 354-355.
2. Determine output speed required.
3. Determine HP or output torque requirement.
4. Select based on output speed and horsepower requirement for given service class.
5. Check overhung load Ref. calculation.

Example

Select a right angle motorized helical-worm shaft mounted gear drive and motor to drive a uniformly loaded line conveyor 24 hours/day requiring 2 HP at 35 RPM.

Power Requirement
230/460 volt
3 phase
60 hertz

1. Select Service Factor Class from page 203. Service Class = II
2. Output RPM = 35
3. 2 HP
4. Select a 2 HP drive that will satisfy min. of II service class.
5. Order: 1 - SF862BR-50K-B7 (F01613) Ref. Page 201
   1 - KUTF Motor

Overhung Load (Not Required for Example)

If the output shaft of a gear drive is connected to the driven machine by other than a flexible coupling, an overhung load is imposed on the shaft. This load may be calculated as follows:

$$OHL = \frac{2\,TK}{D}$$

OHL = Overhung Load (LB.)
T = Shaft Torque (LB.-INS.)
D = PD of Sprocket, Pinion or Pulley (IN.)
K = Load Connection Factor

Load Connection Factor (K)

Sprocket or Timing Belt 1.00
Pinion and Gear Drive 1.25
Pulley and V-Belt Drive 1.50
Pulley and Flat Belt Drive 2.50

An overhung load greater than permissible load value may be reduced to an acceptable value by the use of a sprocket, pinion or pulley of a larger PD. Relocation of the load closer to the center of gear drive will also increase OHL capacity.

Permissible Overhung Loads and Output Shaft Thrust Loads are listed for each gear drive in the Tables on Page 204.

H

800 Series Right Angle Helical-Worm Selection Tables

@ 1750 RPM Input

FOR RATINGS AT OTHER INPUT SPEEDS, SEE TABLES ON PAGES 222-231.
ORDER BY CATALOG NUMBER OR ITEM CODE
FOR STANDARD MOUNTING POSITIONS

Approx. Output RPM	Nominal Ratio*	NON-FLANGED			FLANGED (GEARMOTORS)			
		GEAR Capacity		Catalog Number (Item Code)	Motor HP	Ratings Output Torque	Service Class**	Catalog Number (Item Code) Shaft Mounted
		Output Torque	HP Input					
35	50	3248	2.24	S852BR-50K (F01304)	2 1.5	2899 2174	I II	SF852BR-50K-B7 (F01547)
					1	1499	III	SF852BR-50K-B5 (F01546)
		5930	3.79	S862BR-50K (F01349)	3	4692	I	SF862BR-50K-B9 (F01614)
					2 1.5	3128 2346	II III	SF862BR-50K-B7 (F01613)

* Gear Ratio is Approximate. For Actual Gear Ratio Reference Pages 222-231.
** Service Class I (S.F. = 1.00) Service Class II (S.F. = 1.50) Service Class III (S.F. = 2.00)
Overhung Load Ratings refer to Page 204.

To properly select a gear drive, the following application information should be known.

1. Service Factor or AGMA Service class.
2. Output Horsepower or Torque
3. Output RPM or Ratio
   (Maximum Input Speed 4500 RPM)

Consult Engineering for mounting positions: M2, M3, M4, and M6.

Non-Motorized Gear Drives

1. Determine application service factor from the service factor chart on this page, or from Application Classifications on pages 354-355.
2. Determine design Horsepower or Torque.
   - Design HP = Application HP x S.F.
   - Design Torque = Application Torque x S.F.
3. Select a Gear drive that satisfies output RPM, service class and/or output torque requirement.
4. Overhung shaft load should be checked when belt or chain drives are used, to prevent premature shaft or bearing failure. Ref. page 204 for calculations.

Example

Select a right angle 800BR Series Gear Drive for a continuous duty concrete mixer requiring 2800 lb-in. of torque at approx. 140 RPM, to operate up to 8 hrs/day. The Gear Drive will be driven at 1160 input RPM.

1. Application Service Factor = 1.25
2. Design Torque = 2800 x 1.25 = 3500
3. Select at speed and torque level of 3500 lb-ins. or greater.
4. Order 862BR-8K.

Order solid projecting shaft, output mounting flange or reaction torque arms from available kits reference pages 236 and 237.

NOTE: The use of an auxiliary drive between the gear drive and the driven machine reduces the torque required at the output shaft in direct proportion to the auxillary drive ratio.

A 3:1 chain ratio would reduce the torque requirement at the output shaft of the gear drive to one-third, resulting in a smaller unit size selection.

SERVICE FACTOR CHART

AGMA Class of Service	Service Factor	Operating Conditions
I	1	Moderate Shock-not more than 15 minutes in 2 hours Uniform Load-not more than 10 hours per day.
II	1.25	Moderate Shock-not more than 10 hours per day. Uniform Load-more than 10 hours per day.
	1.5	Heavy Shock-not more than 15 minutes in 2 hours. Moderate Shock-more than 10 hours per day.
III	1.75 2.00	Heavy Shock-not more than 10 hours per day. Heavy Shock-more than 10 hours per day.

For complete AGMA Service Factors and Load Classifications, see Engineering Pages 354-355.

H

800 Series Right Angle Helical-Worm Ratings

Non-Flanged; Input Speeds 1750, 1450 and 1160 RPM

Service Factor 1.0

Catalog Number	Input Speed								
	1750 RPM			1450 RPM			1160 RPM		
	Approx. Output RPM	Output Torque (LB-IN)(Max.)	Input HP (Max.)	Approx. Output RPM	Output Torque (LB-IN)(Max.)	Input HP (Max.)	Approx. Output RPM	Output Torque (LB-IN) (Max.)	Input HP (Max.)
832BR-8K	218	689	2.65	181	717	2.30	145	751	1.95
842BR-8K	218	1100	4.39	181	1152	3.81	145	1209	3.23
852BR-8K	218	1678	6.66	181	1829	6.00	145	1991	5.28
862BR-8K	218	2910	11.40	181	3292	10.20	145	3607	8.98

Overhung Loads (lbs) & Axial Thrusts (lbs)

Overhung Loads & Axial Thrust Capacities on Output Shaft

Output RPM	832 / 833		842 / 843		852 / 853		862 / 863	
	OHL	Thrust	OHL	Thrust	OHL	Thrust	OHL	Thrust
180	440	1650	1770	2570	1670	3420	1730	3920
125	440	1840	1770	2830	1670	3720	1720	4220
80	440	2260	1770	3410	1670	4220	1700	4990
50	440	2740	1770	4160	1670	5220	1660	5850
32	440	3000	1770	4530	1670	5540	1640	6400
25	440	3000	1770	4670	1670	5860	1620	6550
10	430	3890	1770	6160	1670	7760	1570	8550
5	430	4620	1770	7090	1670	9000	1560	10500
1	430	4840	1770	7130	1660	8950	1560	10500

H

Overhung Loads (LBS) on Input Shaft at 1750 RPM

Ratio	Size			
	832	842	852	862
8.0	290	270	255	300
14.0	300	280	260	315
20.0	300	285	265	320
32.0	305	290	265	320
50.0	310	290	270	320
71.0	310	295	265	315
112.0	310	305	280	320
160.0	320	305	280	335
250.0	320	310	290	345

Ratio	Size			
	833	843	853	863
100.0	315	310	295	280
180.0	315	315	300	285
280.0	315	315	305	285
400.0	315	315	305	290
560.0	320	315	305	295
900.0	320	315	305	300

Approximate Weights (LBS)

NON-FLANGE Reducers		FLANGE Reducers				
			NEMA Mounting			
Size	Lbs	Size	56C B5	140TC B7	180TC B9	210TC B11
S832BR	24	SF832BR	26	26	—	—
S842BR	32	SF842BR	31	31	34	—
S852BR	39	SF852BR	—	35	38	—
S862BR	70	SF862BR	—	—	80	80
S833BR	32	SF833BR	33	—	—	—
S843BR	40	SF843BR	39	—	—	—
S853BR	47	SF853BR	43	—	—	—
S863BR	83	SF863BR	78	78	—	—

Lubricant and Quantity

Klubersynth UH1 6-460 is recommended for the 800BR Series gear drives and at all times, the lubricant must remain free from contamination. Normal operating temperatures range between 150°F - 170°F. During the initial break-in of the gear drive, higher than normal operating temperatures may result.

All gear drives are supplied filled with UH1 6-460 synthetic oil and with the quantity listed below for standard mounting position M1 or to mounting specified at time of order.

- Sizes 832/833BR and 842/843BR do not require a vent plug.
- Sizes 852/853BR and 862/863BR will require an oil change after 20,000 hours of operation. More frequent changes may be required when operating in high temperature ranges or unusually contaminated environments.
- Satisfactory performance may be obtained in some applications with non-synthetic oils and will require more frequent changes.

Recommended Lubricant	Ambient (Room) Temperature	ISO Viscosity Grade No.	Viscosity Range SUS @100°F	Boston Gear Item Code
				Quart
Klubersynth UH1 6-460	-20° to 225°F (-29° to 107°C)	460	1950/2500	65159
Mobil SHC634	-30° to 225°F (-34° to 107°C	320 / 460	1950/2500	51493

Oil Capacities (PINTS)

Unit Size	Mounting Positions					
	M1	M2	M3	M4	M5	M6
832BR	.80	1.0	1.0	1.7	1.7	1.7
833BR	2.3	1.3	1.3	2.8	2.8	2.8
842BR	1.2	1.6	1.6	2.0	2.0	2.0
843BR	2.6	1.8	1.8	3.2	3.4	3.4
852BR	1.8	2.3	2.3	2.7	3.8	3.8
853BR	3.2	2.8	2.8	4.4	4.8	4.8
862BR	4.0	4.6	4.6	7.0	7.0	7.0
863BR	7.0	5.8	5.8	8.8	9.6	10.0

800 Series Right Angle Helical Worm Mounting Positions

Horizontal Mountings

STANDARD

M1

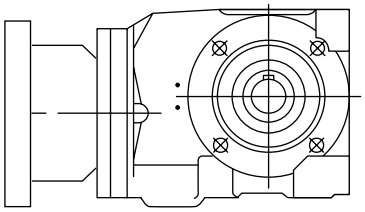

M2

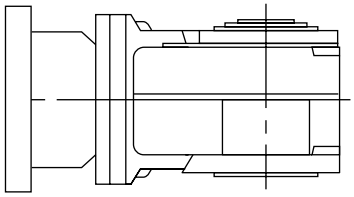

M3

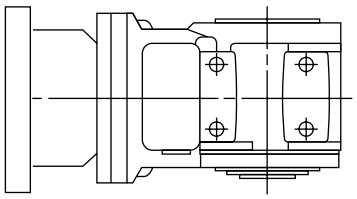

M4

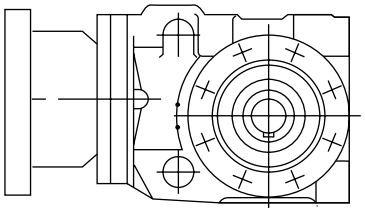

Vertical Mountings

M5

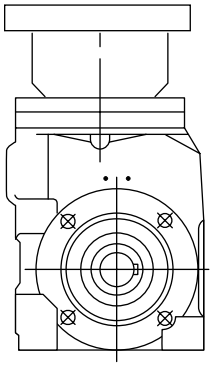

M6

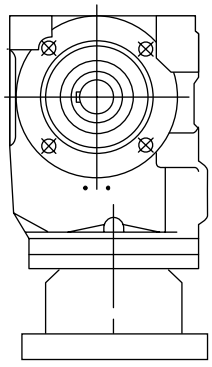

- Position M1 is standard and will be supplied with oil for this position unless otherwise specified.

CAUTION: Mounting of gear drives in overhead positions may be hazardous. Use of external guides or supports is strongly recommended for overhead mounting. Avoiding those positions where the high speed oil seal is immersed in oil will provide greater security against high speed input seal wear.

Note: The above drawings will serve to represent both flanges and non-flanged styles.

@ 1750 RPM Input

FOR RATINGS AT OTHER INPUT SPEEDS, SEE TABLES ON PAGES 222-231.

ORDER BY CATALOG NUMBER OR ITEM CODE

FOR STANDARD MOUNTING POSITIONS†

Approx. Output RPM	Ratio*	Non-Flanged			Flanged (Gearmotors)			
		Gear Capacity			Ratings			
		Output Torque (LB-IN.)	Input HP	Catalog No. (Item Code)	Motor HP	Output Torque (LB-IN.)	Service Class**	Catalog No. (Item Code)
218	8	689	2.65	S832BR-8K-M1 (F01218)	2 1.5	519 389	I II	SF832BR-8K-B7-M1 (F01432)
					1	260	III	SF832BR-8K-B5-M1 (F01431)
		1160	4.39	S842BR-8K-M1 (F01263)	3	751	II	SF842BR-8K-B9-M1 (F01491)
					2	500	III	SF842BR-8K-B7-M1 (F01490)
		1678	6.66	S852BR-8K-M1 (F01309)	5 3	1260 755	I III	SF852BR-8K-B9-M1 (F01558)
		2940	11.40	S862BR-8K-M1 (F01354)	10 7.5	2578 1933	I II	SF862BR-8K-B11-M1 (F01622)
					5	1289	III	SF862BR-8K-B9-M1 (F01623)
159	11	742	2.14	S832BR-11K-M1 (F01195)	2 1.5	694 520	I II	SF832BR-11K-B7-M1 (F01404)
					1	347	II	SF832BR-11K-B5-M1 (F01403)
		1194	3.57	S842BR-11K-M1 (F01240)	3	1003	I	SF842BR-11K-B9-M1 (F01453)
					2 1.5	668 501	II III	SF842BR-11K-B7-M1 (F01452)
		1930	5.52	S852BR-11K-M1 (F01285)	5 3	1746 1048	I II	SF852BR-11K-B9-M1 (F01517)
					2	666	III	SF852BR-11K-B7-M1 (F01516)
		3480	9.38	S862BR-11K-M1 (F01331)	7.5	2780	I	SF862BR-11K-B11-M1 (F01584)
					5 3	1853 1112	II III	SF862BR-11K-B9-M1 (F01585)
145 (CONT.)	12	787	1.95	S832BR-12K-M1 (F01197)	1.5	605	I	SF832BR-12K-B7-M1 (F01407)
					1 .75	403 302	II III	SF832BR-12K-B5-M1 (F01406)
		1264	3.25	S842BR-12K-M1 (F01242)	3	1166	I	SF842BR-12K-B9-M1 (F01456)
					2 1.5	777 583	II III	SF842BR-12K-B7-M1 (F01455)

* Gear Ratio is Approximate. For Actual Gear Ratio Reference Pages 222-231.
** Service Class I (S.F. = 1.00) Service Class II (S.F. = 1.50) Service III (S.F. = 2.00)
Actual Output RPM = Input Speed ÷ Actual Ratio.
For Overhung Load Ratings refer to Page 204.
† For Base / Projecting Shaft / Output Flange see How to Order Page 201.

800 Series Right Angle Helical Worm Selection Tables

@ 1750 RPM Input

FOR RATINGS AT OTHER INPUT SPEEDS, SEE TABLES ON PAGES 222-231.
ORDER BY CATALOG NUMBER OR ITEM CODE
FOR STANDARD MOUNTING POSITIONS†

Approx. Output RPM	Ratio*	Non-Flanged			Flanged (Gearmotors)			
		Gear Capacity		Catalog No. (Item Code)	Ratings			Catalog No. (Item Code)
		Output Torque (LB-IN.)	Input HP		Motor HP	Output Torque (LB-IN.)	Service Class**	
145 (CONT)	12	2010	5.22	S852BR-12K-M1 (F01287)	5 3	1924 1155	I II	SF852BR-12K-B9-M1 (F01520)
					2	770	III	SF852BR-12K-B7-M1 (F01519)
		3646	8.77	S862BR-12K-M1 (F01333)	7.5	3117	I	SF862BR-12K-B11-M1 (F01587)
					5 3	2078 1246	II III	SF862BR-12K-B9-M1 (F01588)
125	14	790	1.79	S832BR-14K-M1 (F01199)	1.5	662	I	SF832BR-14K-B7-M1 (F01410)
					1 .75	441 330	II III	SF832BR-14K-B5-M1 (F01409)
		1288	2.99	S842BR-14K-M1 (F01244)	3	1288	I	SF842BR-14K-B9-M1 (F01459)
					2 1.5	861 646	II III	SF842BR-14K-B7-M1 (F01458)
		2060	4.85	S852BR-14K-M1 (F01289)	3	1274	II	SF852BR-14K-B9-M1 (F01523)
					2	849	III	SF852BR-14K-B7-M1 (F01522)
		3827	8.20	S862BR-14K-M1 (F01335)	7.5	3498	I	SF862BR-14K-B11-M1 (F01591)
					5 3	2332 1399	II III	SF862BR-14K-B9-M1 (F01592)
109	16	730	1.70	S832BR-16K-M1 (F01201)	1.5	644	I	SF832BR-16K-B7-M1 (F01413)
					1 .75	430 322	II III	SF832BR-16K-B5-M1 (F01412)
		1218	2.72	S842BR-16K-M1 (F01246)	2 1.5	895 671	I II	SF842BR-16K-B7-M1 (F01462)
					1	448	III	SF842BR-16K-B5-M1 (F01461)
		2710	5.92	S852BR-16K-M1 (F01291)	5 3	2287 1372	I III	SF852BR-16K-B9-M1 (F01525)
		4199	9.03	S862BR-16K-M1 (F01337)	7.5	3054	I	SF862BR-16K-B11-M1 (F01595)
					5 3	2323 1393	II III	SF862BR-16K-B9-M1 (F01596)

* Gear Ratio is Approximate. For Actual Gear Ratio Reference Pages 222-231.
** Service Class I (S.F. = 1.00) Service Class II (S.F. = 1.50) Service III (S.F. = 2.00)
Actual Output RPM = Input Speed ÷ Actual Ratio.
For Overhung Load Ratings refer to Page 204.
† For Base / Projecting Shaft / Output Flange see How to Order Page 201.

@ 1750 RPM Input

FOR RATINGS AT OTHER INPUT SPEEDS, SEE TABLES ON PAGES 222-231.
ORDER BY CATALOG NUMBER OR ITEM CODE
FOR STANDARD MOUNTING POSITIONS†

Approx. Output RPM	Ratio*	Non-Flanged			Flanged (Gearmotors)			
		Gear Capacity		Catalog No. (Item Code)	Ratings			Catalog No. (Item Code)
		Output Torque (LB-IN.)	Input HP		Motor HP	Output Torque (LB-IN.)	Service Class**	
97	18	864	1.50	S832BR-18K-M1 (F01202)	1.5	864	I	SF832BR-18K-B7-M1 (F01415)
					1 .75	576 432	II III	SF832BR-18K-B5-M1 (F01414)
		1388	2.50	S842BR-18K-M1 (F01247)	2 1.5	1110 832	I II	SF842BR-18K-B7-M1 (F01464)
					1	555	III	SF842BR-18K-B5-M1 (F01463)
		2162	4.21	S852BR-18K-M1 (F01292)	3	1540	I	SF852BR-18K-B9-M1 (F01527)
					2	1026	III	SF852BR-18K-B7-M1 (F01526)
		4208	7.10	S862BR-18K-M1 (F01338)	5 3	2962 1777	I III	SF862BR-18K-B9-M1 (F01597)
87	20	860	1.43	S832BR-20K-M1 (F01203)	1 .75	600 451	I III	SF832BR-20K-B5-M1 (F01416)
		1391	2.37	S842BR-20K-M1 (F01248)	2 1.5	1173 880	I II	SF842BR-20K-B7-M1 (F01466)
					1	586	III	SF842BR-20K-B5-M1 (F01465)
		2345	3.90	S852BR-20K-M1 (F01294)	3	1803	I	SF852BR-20K-B9-M1 (F01529)
					2 1.5	1202 902	II III	SF852BR-20K-B7-M1 (F01528)
		4400	6.58	S862BR-20K-M1 (F01339)	5 3	3343 2006	I III	SF862BR-20K-B9-M1 (F01598)
79	22	804	1.39	S832BR-22K-M1 (F01205)	1 .75 .50	578 434 289	I II III	SF832BR-22K-B5-M1 (F01418)
		1321	2.23	S842BR-22K-M1 (F01250)	2 1.5	1184 888	I II	SF842BR-22K-B7-M1 (F01470)
					1	592	III	SF842BR-22K-B5-M1 (F01468)
		3086	4.90	S852BR-22K-M1 (F01296)	5 3	3086 1889	I II	SF852BR-22K-B9-M1 (F01532)
					2	1259	III	SF852BR-22K-B7-M1 (F01531)
		4784	7.41	S862BR-22K-M1 (F01341)	5 3	3226 1935	II III	SF862BR-22K-B9-M1 (F01601)

* Gear Ratio is Approximate. For Actual Gear Ratio Reference Pages 222-231.
** Service Class I (S.F. = 1.00) Service Class II (S.F. = 1.50) Service III (S.F. = 2.00)
Actual Output RPM = Input Speed ÷ Actual Ratio.
For Overhung Load Ratings refer to Page 204.
† For Base / Projecting Shaft / Output Flange see How to Order Page 201.

H

800 Series Right Angle Helical Worm Selection Tables

@ 1750 RPM Input

FOR RATINGS AT OTHER INPUT SPEEDS, SEE TABLES ON PAGES 222-231.
ORDER BY CATALOG NUMBER OR ITEM CODE
FOR STANDARD MOUNTING POSITIONS†

Approx. Output RPM	Ratio*	Non-Flanged			Flanged (Gearmotors)			
		Gear Capacity			Ratings			
		Output Torque (LB-IN.)	Input HP	Catalog No. (Item Code)	Motor HP	Output Torque (LB-IN.)	Service Class**	Catalog No. (Item Code)
70	25	843	1.28	S832BR-25K-M1 (F01207)	1 .75 .50	658 494 329	I II III	SF832BR-25K-B5-M1 (F01420)
		1389	2.04	S842BR-25K-M1 (F01252)	2 1.5	1360 1020	I I	SF842BR-25K-B7-M1 (F01473)
					1	680	III	SF842BR-25K-B5-M1 (F01472)
		3177	4.62	S852BR-25K-M1 (F01298)	3	2062	II	SF852BR-25K-B9-M1 (F01535)
					2	1374	III	SF852BR-25K-B7-M1 (F01534)
		5026	6.94	S862BR-25K-M1 (F01343)	5 3	3620 2172	I III	SF862BR-25K-B9-M1 (F01603)
62	28	862	1.17	S832BR-28K-M1 (F01208)	1 .75 .50	736 552 368	I II III	SF832BR-28K-B5-M1 (F01421)
		1363	1.88	S842BR-28K-M1 (F01253)	1.5	1087	I	SF842BR-28K-B7-M1 (F01475)
					1 .75	725 543	II III	SF842BR-28K-B5-M1 (F01474)
		3200	4.24	S852BR-28K-M1 (F01299)	3	2263	I	SF852BR-28K-B9-M1 (F01537)
					2	1508	III	SF852BR-28K-B7-M1 (F01536)
		5290	6.49	S862BR-28K-M1 (F01344)	5 3	4073 2444	I III	SF862BR-28K-B9-M1 (F01604)
54	32	971	1.00	S832BR-32K-M1 (F01209)	1 .75 .50	971 728 485	I II III	SF832BR-32K-B5-M1 (F01422)
		1560	1.66	S842BR-32K-M1 (F01254)	1.5	1409	I	SF842BR-32K-B7-M1 (F01477)
					1 .75	940 705	II III	SF842BR-32K-B5-M1 (F01476)
		2813	2.98	S852BR-32K-M1 (F01300)	3	2813	I	SF852BR-32K-B9-M1 (F01539)
					2 1.5	1887 1415	II III	SF852BR-32K-B7-M1 (F01538)
		5184	4.93	S862BR-32K-M1 (F01345)	3	3153	II	SF862BR-32K-B9-M1 (F01606)
					2	2102	III	SF862BR-32K-B7-M1 (F01605)

* Gear Ratio is Approximate. For Actual Gear Ratio Reference Pages 222-231.
** Service Class I (S.F. = 1.00) Service Class II (S.F. = 1.50) Service III (S.F. = 2.00)
Actual Output RPM = Input Speed ÷ Actual Ratio.
For Overhung Load Ratings refer to Page 204.
† For Base / Projecting Shaft / Output Flange see How to Order Page 201.

800 Series Right Angle Helical Worm Selection Tables

@ 1750 RPM Input

FOR RATINGS AT OTHER INPUT SPEEDS, SEE TABLES ON PAGES 222-231.
ORDER BY CATALOG NUMBER OR ITEM CODE
FOR STANDARD MOUNTING POSITIONS†

Approx. Output RPM	Ratio*	Non-Flanged			Flanged (Gearmotors)			
		Gear Capacity			Ratings			
		Output Torque (LB-IN.)	Input HP	Catalog No. (Item Code)	Motor HP	Output Torque (LB-IN.)	Service Class**	Catalog No. (Item Code)
48	36	936	0.99	S832BR-36K-M1 (F01210)	1 .75 .50	936 709 472	I I III	SF832BR-36K-B5-M1 (F01423)
		1525	1.59	S842BR-36K-M1 (F01255)	1.5	1438	I	SF842BR-36K-B7-M1 (F01479)
					1 .75	959 719	II III	SF842BR-36K-B5-M1 (F01478)
		3262	3.59	S852BR-36K-M1 (F01301)	3	2722	I	SF852BR-36K-B9-M1 (F01541)
					2	1816	II	SF852BR-36K-B7-M1 (F01540)
		5768	5.65	S862BR-36K-M1 (F01346)	5 3	5102 3061	I II	SF862BR-36K-B9-M1 (F01608)
					2	2040	III	SF862BR-36K-B7-M1 (F01607)
43	40	933	0.94	S832BR-40K-M1 (F01211)	.75 .50 .33	744 746 330	I II III	SF832BR-40K-B5-M1 (F01424)
		1527	1.51	S842BR-40K-M1 (F01256)	1.5	1516	I	SF842BR-40K-B7-M1 (F01481)
					1 .75	1010 758	II III	SF842BR-40K-B5-M1 (F01480)
		3453	3.28	S852BR-40K-M1 (F01302)	3	3156	I	SF852BR-40K-B9-M1 (F01543)
					2 1.5	2104 1578	II III	SF852BR-40K-B7-M1 (F01542)
		6045	5.25	S862BR-40K-M1 (F01347)	5 3	5754 3453	I II	SF862BR-40K-B9-M1 (F01610)
					2	2302	III	SF862BR-40K-B7-M1 (F01609)
38 (CONT.)	45	1032	0.8	S832BR-45K-M1 (F01212)	.75 .50 .33	967 644 430	I II III	SF832BR-45K-B5-M1 (F01425)
		1669	1.34	S842BR-45K-M1 (F01257)	1 .75 .50	1244 933 622	I II III	SF842BR-45K-B5-M1 (F01482)

* Gear Ratio is Approximate. For Actual Gear Ratio Reference Pages 222-231.
** Service Class I (S.F. = 1.00) Service Class II (S.F. = 1.50) Service III (S.F. = 2.00)
Actual Output RPM = Input Speed ÷ Actual Ratio.
For Overhung Load Ratings refer to Page 204.
† For Base / Projecting Shaft / Output Flange see How to Order Page 201.

H

800 Series Right Angle Helical Worm Selection Tables

@ 1750 RPM Input

FOR RATINGS AT OTHER INPUT SPEEDS, SEE TABLES ON PAGES 222-231.
ORDER BY CATALOG NUMBER OR ITEM CODE
FOR STANDARD MOUNTING POSITIONS†

Approx. Output RPM	Ratio*	Non-Flanged			Flanged (Gearmotors)			
		Gear Capacity			Ratings			
		Output Torque (LB-IN.)	Input HP	Catalog No. (Item Code)	Motor HP	Output Torque (LB-IN.)	Service Class**	Catalog No. (Item Code)
38 (CONT.)	45	3165	2.37	S852BR-45K-M1 (F01303)	2 1.5	2669 1978	I II	SF852BR-45K-B7-M1 (F01545)
					1	1335	III	SF852BR-45K-B5-M1 (F01544)
		5810	3.95	S862BR-45K-M1 (F01348)	3	4410	I	SF862BR-45K-B9-M1 (F01612)
					2	3407	II	SF862BR-45K-B7-M1 (F01611)
35	50	1000	0.71	S832BR-50K-M1 (F01213)	.50 .33	703 469	I III	SF832BR-50K-B5-M1 (F01426)
		1616	1.19	S842BR-50K-M1 (F01258)	1 .75 .50	1354 1015 677	I II III	SF842BR-50K-B5-M1 (F01483)
		3248	2.24	S852BR-50K-M1 (F01304)	2 1.5	2899 2174	I II	SF852BR-50K-B7-M1 (F01547)
					1	1449	III	SF852BR-50K-B5-M1 (F01546)
		5930	3.79	S862BR-50K-M1 (F01349)	3	4692	I	SF862BR-50K-B9-M1 (F01614)
					2 1.5	3128 2346	II III	SF862BR-50K-B7-M1 (F01613)
31	56	1033	0.74	S832BR-56K-M1 (F01214)	.75 .50 .33	1033 698 465	I II III	SF832BR-56K-B5-M1 (F01427)
		1670	1.18	S842BR-56K-M1 (F01259)	1 .75 .50	1416 1062 708	I II III	SF842BR-56K-B5-M1 (F01484)
		3813	2.63	S852BR-56K-M1 (F01305)	2 1.5	2900 2174	I II	SF852BR-56K-B7-M1 (F01549)
					1	1449	III	SF852BR-56K-B5-M1 (F01548)
		6500	4.2	S862BR-56K-M1 (F01350)	3	4633	I	SF862BR-56K-B9-M1 (F01616)
					2	3088	III	SF862BR-56K-B7-M1 (F01615)

* Gear Ratio is Approximate. For Actual Gear Ratio Reference Pages 222-231.
** Service Class I (S.F. = 1.00) Service Class II (S.F. = 1.50) Service III (S.F. = 2.00)
Actual Output RPM = Input Speed ÷ Actual Ratio.
For Overhung Load Ratings refer to Page 204.
† For Base / Projecting Shaft / Output Flange see How to Order Page 201.

@ 1750 RPM Input

FOR RATINGS AT OTHER INPUT SPEEDS, SEE TABLES ON PAGES 222-231.
ORDER BY CATALOG NUMBER OR ITEM CODE
FOR STANDARD MOUNTING POSITIONS†

Approx. Output RPM	Ratio*	Non-Flanged			Flanged (Gearmotors)			
		Gear Capacity			Ratings			
		Output Torque (LB-IN.)	Input HP	Catalog No. (Item Code)	Motor HP	Output Torque (LB-IN.)	Service Class**	Catalog No. (Item Code)
27	63	1040	0.67	S832BR-63K-M1 (F01215)	.50 .33	775 517	I III	SF832BR-63K-B5-M1 (F01428)
		1710	1.07	S842BR-63K-M1 (F01260)	1 .75 .50	1597 1197 800	I II III	SF842BR-63K-B5-M1 (F01485)
		3899	2.39	S852BR-63K-M1 (F01306)	2 1.5	3261 2446	I II	SF852BR-63K-B7-M1 (F01552)
					1	1630	III	SF852BR-63K-B5-M1 (F01550)
		6720	3.76	S862BR-63K-M1 (F01351)	3	5360	I	SF862BR-63K-B9-M1 (F01618)
					2 1.5	3574 2680	II III	SF862BR-63K-B7-M1 (F01617)
24	71	1192	0.59	S832BR-71K-M1 (F01216)	.50 .33 .25	1009 673 505	I II III	SF832BR-71K-B5-M1 (F01429)
		1739	0.88	S842BR-71K-M1 (F01261)	.75 .50 .33	1482 950 658	I II III	SF842BR-71K-B5-M1 (F01487)
		3225	1.71	S852BR-71K-M1 (F01307)	1.5	2828	I	SF852BR-71K-B7-M1 (F01555)
					1 .75	1885 1414	II III	SF852BR-71K-B5-M1 (F01554)
		6645	2.94	S862BR-71K-M1 (F01352)	2 1.5	4520 3389	II III	SF862BR-71K-B7-M1 (F01619)
21	80	1250	0.54	S832BR-80K-M1 (F01217)	.50 .33 .25	1158 772 579	I II III	SF832BR-80K-B5-M1 (F01430)
		1619	0.74	S842BR-80K-M1 (F01262)	.75 .50 .33	1640 1093 729	I II III	SF842BR-80K-B5-M1 (F01488)
		3453	1.5	S852BR-80K-M1 (F01308)	1.5	3453	I	SF852BR-80K-B7-M1 (F01557)
					1 .75	2368 1776	II III	SF852BR-80K-B5-M1 (F01556)
		6783	2.77	S862BR-80K-M1 (F01353)	2 1.5	4895 3671	I II	SF862BR-80K-B7-M1 (F01621)
					1	2444	III	SF862BR-80K-B5-M1 (F01620)

* Gear Ratio is Approximate. For Actual Gear Ratio Reference Pages 222-231.
** Service Class I (S.F. = 1.00) Service Class II (S.F. = 1.50) Service III (S.F. = 2.00)
Actual Output RPM = Input Speed ÷ Actual Ratio.
For Overhung Load Ratings refer to Page 204.
† For Base / Projecting Shaft / Output Flange see How to Order Page 201.

H

800 Series Right Angle Helical Worm Selection Tables

@ 1750 RPM Input

FOR RATINGS AT OTHER INPUT SPEEDS, SEE TABLES ON PAGES 222-231.
ORDER BY CATALOG NUMBER OR ITEM CODE
FOR STANDARD MOUNTING POSITIONS†

Approx. Output RPM	Ratio*	Non-Flanged			Flanged (Gearmotors)			
		Gear Capacity			Ratings			
		Output Torque (LB-IN.)	Input HP	Catalog No. (Item Code)	Motor HP	Output Torque (LB-IN.)	Service Class**	Catalog No. (Item Code)
19	90	1187	0.57	S832BR-90K-M1 (F01219)	0.5 0.33 0.25	1040 693 520	I II III	SF832BR-90K-B5-M1 (F01433)
		1934	0.91	S842BR-90K-M1 (F01264)	0.75 0.5 0.33	1593 1062 708	I II III	SF842BR-90K-B5-M1 (F01492)
		4178	1.82	S852BR-90K-M1 (F01310)	1.5	3442	I	SF852BR-90K-B7-M1 (F01560)
					1 0.75	2295 1720	II III	SF852BR-90K-B5-M1 (F01559)
		7514	3.05	S862BR-90K-M1 (F01355)	3	7388	I	SF862BR-90K-B9-M1 (F01625)
					2 1.5	4925 3694	II III	SF862BR-90K-B7-M1 (F01624)
17	100	1120	0.51	S832BR-100K-M1 (F01193)	0.5 0.33 0.25	1098 732 549	I II III	SF832BR-100K-B5-M1 (F01401)
		1302	0.47	S833BR-100K-M1 (F01220)	0.33 0.25 0.16	923 692 461	I II III	SF833BR-100K-B5-M1 (F01434)
		1835	0.81	S842BR-100K-M1 (F01238)	0.75 0.5 0.33	1697 1132 755	I II III	SF842BR-100K-B5-M1 (F01450)
		1700	0.63	S843BR-100K-M1 (F01265)	0.5 0.33 0.25	1349 900 674	I II III	SF843BR-100K-B5-M1 (F01495)
		4225	1.71	S852BR-100K-M1 (F01283)	1.5	3704	I	SF852BR-100K-B7-M1 (F01514)
					1 0.75	2469 1852	II III	SF852BR-100K-B5-M1 (F01513)
		3477	1.22	S853BR-100K-M1 (F01311)	1 0.75 0.5	2849 2136 1424	I II III	SF853BR-100K-B5-M1 (F01563)
		7539	2.87	S862BR-100K-M1 (F01329)	2 1.5	5252 3939	I III	SF862BR-100K-B7-M1 (F01581)
		7173	2.34	S863BR-100K-M1 (F01356)	2 1.5	6128 4596	I II	SF863BR-100K-B7-M1 (F01627)
					1	3064	III	SF863BR-100K-B5-M1 (F01626)

* Gear Ratio is Approximate. For Actual Gear Ratio Reference Pages 222-231.
** Service Class I (S.F. = 1.00) Service Class II (S.F. = 1.50) Service III (S.F. = 2.00)
Actual Output RPM = Input Speed ÷ Actual Ratio.
For Overhung Load Ratings refer to Page 204.
† For Base / Projecting Shaft / Output Flange see How to Order Page 201.
▭ Indicates Triple Reduction

800 Series Right Angle Helical Worm Selection Tables

@ 1750 RPM Input

FOR RATINGS AT OTHER INPUT SPEEDS, SEE TABLES ON PAGES 222-231.
ORDER BY CATALOG NUMBER OR ITEM CODE
FOR STANDARD MOUNTING POSITIONS†

Approx. Output RPM	Ratio*	Non-Flanged			Flanged (Gearmotors)			
		Gear Capacity		Catalog No. (Item Code)	Ratings			Catalog No. (Item Code)
		Output Torque (LB-IN.)	Input HP		Motor HP	Output Torque (LB-IN.)	Service Class**	
15	112	1360	0.44	S832BR-112K-M1 (F01194)	.33 .25 .16	1029 772 514	I II III	SF832BR-112K-B5-M1 (F01402)
		1412	0.48	S842BR-112K-M1 (F01239)	.33 .25 .16	980 735 490	I II III	SF842BR-112K-B5-M1 (F01451)
		3088	1.00	S852BR-112K-M1 (F01284)	1 .75 .50	3088 2317 1544	I I III	SF852BR-112K-B5-M1 (F01515)
		6574	1.97	S862BR-112K-M1 (F01330)	1.5	5003	I	SF862BR-112K-B7-M1 (F01583)
					1 .75	3366 2502	II III	SF862BR-112K-B5-M1 (F01582)
14	118	1321	0.42	S833BR-118K-M1 (F01221)	.33 .25 .16	1048 786 524	I II III	SF833BR-118K-B5-M1 (F01435)
		1698	0.55	S843BR-118K-M1 (F01266)	.50 .33 .25	1543 1029 772	I II III	SF843BR-118K-B5-M1 (F01496)
		3436	1.07	S853BR-118K-M1 (F01312)	1 .75 .50	3210 2407 1605	I II III	SF853BR-118K-B5-M1 (F01564)
		7434	2.14	S863BR-118K-M1 (F01357)	2 1.5	6945 5209	I II	SF863BR-118K-B7-M1 (F01629)
					1	3472	III	SF863BR-118K-B5-M1 (F01628)
14	125	1311	0.36	S832BR-125K-M1 (F01196)	.33 .25 .16	1213 910 606	I II III	SF832BR-125K-B5-M1 (F01405)
		1248	0.36	S842BR-125K-M1 (F01241)	.33 .25 .16	1155 866 578	I II III	SF842BR-125K-B5-M1 (F01454)
		2630	0.75	S852BR-125K-M1 (F01286)	.75 .50 .33	2630 1753 1167	I II III	SF852BR-125K-B5-M1 (F01518)
		4832	1.28	S862BR-125K-M1 (F01332)	1 .75 .50	3773 2830 1886	I II III	SF862BR-125K-B5-M1 (F01586)

* Gear Ratio is Approximate. For Actual Gear Ratio Reference Pages 222-231.
** Service Class I (S.F. = 1.00) Service Class II (S.F. = 1.50) Service III (S.F. = 2.00)
Actual Output RPM = Input Speed ÷ Actual Ratio.
For Overhung Load Ratings refer to Page 204.
† For Base / Projecting Shaft / Output Flange see How to Order Page 201.
▭ Indicates Triple Reduction

H

800 Series Right Angle Helical Worm Selection Tables

@ 1750 RPM Input

FOR RATINGS AT OTHER INPUT SPEEDS, SEE TABLES ON PAGES 222-231.
ORDER BY CATALOG NUMBER OR ITEM CODE
FOR STANDARD MOUNTING POSITIONS†

Approx. Output RPM	Ratio*	Non-Flanged			Flanged (Gearmotors)			
		Gear Capacity			Ratings			
		Output Torque (LB-IN.)	Input HP	Catalog No. (Item Code)	Motor HP	Output Torque (LB-IN.)	Service Class**	Catalog No. (Item Code)
13	132	1270	0.42	S833BR-132K-M1 (F01222)	.33 .25 .16	966 724 483	I II III	SF833BR-132K-B5-M1 (F01436)
		1953	0.66	S843BR-132K-M1 (F01267)	.50 .33	1478 986	I III	SF843BR-132K-B5-M1 (F01497)
		4596	1.42	S853BR-132K-M1 (F01313)	1 .75 .50	3235 2426 1617	I II III	SF853BR-132K-B5-M1 (F01565)
		7410	2.21	S863BR-132K-M1 (F01358)	2 1.5	6739 5054	I II	SF863BR-132K-B7-M1 (F01631)
					1	3370	III	SF863BR-132K-B5-M1 (F01630)
12	140	1310	0.4	S832BR-140K-M1 (F01198)	.33 .25 .16	1090 818 545	I II III	SF832BR-140K-B5-M1 (F01408)
		2117	0.64	S842BR-140K-M1 (F01243)	.50 .33 .25	1653 1102 826	I II III	SF842BR-140K-B5-M1 (F01457)
		4143	1.3	S852BR-140K-M1 (F01288)	1 .75 .50	3186 2389 1592	I II III	SF852BR-140K-B5-M1 (F01521)
		7520	2.02	S862BR-140K-M1 (F01334)	2 1.5	7448 5586	I I	SF862BR-140K-B7-M1 (F01590)
					1	3724	III	SF862BR-140K-B5-M1 (F01589)
11	150	1237	0.4	S833BR-150K-M1 (F01223)	.33 .25 .16	1030 773 515	I II III	SF833BR-150K-B5-M1 (F01437)
		1980	0.63	S843BR-150K-M1 (F01268)	.50 .33 .25	1570 1047 785	I II III	SF843BR-150K-B5-M1 (F01498)
		4604	1.35	S853BR-150K-M1 (F01314)	1 .75 .50	3409 2557 1705	I II III	SF853BR-150K-B5-M1 (F01566)
		7143	2.00	S863BR-150K-M1 (F01359)	2 1.5	7143 5382	I I	SF863BR-150K-B7-M1 (F01633)
					1	3571	III	SF863BR-150K-B5-M1 (F01632)

* Gear Ratio is Approximate. For Actual Gear Ratio Reference Pages 222-231.
** Service Class I (S.F. = 1.00) Service Class II (S.F. = 1.50) Service III (S.F. = 2.00)
Actual Output RPM = Input Speed ÷ Actual Ratio.
For Overhung Load Ratings refer to Page 204.
† For Base / Projecting Shaft / Output Flange see How to Order Page 201.
▭ Indicates Triple Reduction

@ 1750 RPM Input

FOR RATINGS AT OTHER INPUT SPEEDS, SEE TABLES ON PAGES 222-231.
ORDER BY CATALOG NUMBER OR ITEM CODE
FOR STANDARD MOUNTING POSITIONS†

Approx. Output RPM	Ratio*	Non-Flanged			Flanged (Gearmotors)			
		Gear Capacity			Ratings			
		Output Torque (LB-IN.)	Input HP	Catalog No. (Item Code)	Motor HP	Output Torque (LB-IN.)	Service Class**	Catalog No. (Item Code)
10	160	1364	0.37	S832BR-160K-M1 (F01200)	.33 .25 .16	1228 921 614	I II III	SF832BR-160K-B5-M1 (F01411)
		2216	0.59	S842BR-160K-M1 (F01245)	.50 .33 .25	1877 1251 939	I II III	SF842BR-160K-B5-M1 (F01460)
		4738	1.19	S852BR-160K-M1 (F01290)	1 .75 .50	3978 2984 1989	I II III	SF852BR-160K-B5-M1 (F01524)
		7504	1.86	S862BR-160K-M1 (F01336)	1.5	6049	I	SF862BR-160K-B7-M1 (F01594)
					1 .75	4033 3024	II III	SF862BR-160K-B5-M1 (F01593)
10	160	1320	0.33	S833BR-160K-M1 (F01224)	.33 .25 .16	1320 1030 687	I I II	SF833BR-160K-B5-M1 (F01438)
		1693	0.41	S843BR-160K-M1 (F01269)	.33 .25 .16	1376 1032 688	I II III	SF843BR-160K-B5-M1 (F01499)
		3406	0.79	S853BR-160K-M1 (F01315)	.75 .50 .33	3233 2792 1437	I II III	SF853BR-160K-B5-M1 (F01567)
		7431	1.51	S863BR-160K-M1 (F01360)	1.5	7378	I	SF863BR-160K-B7-M1 (F01635)
					1 .75	4919 3689	II III	SF863BR-160K-B5-M1 (F01634)
9.1	180	1247	0.27	S833BR-180K-M1 (F01225)	.25 .16	1153 769	I II	SF833BR-180K-B5-M1 (F01439)
		1545	0.35	S843BR-180K-M1 (F01270)	.33 .25 .16	1471 1103 735	I I III	SF843BR-180K-B5-M1 (F01500)
		3161	0.68	S853BR-180K-M1 (F01316)	.50 .33	2323 1549	I III	SF853BR-180K-B5-M1 (F01568)
		7427	1.39	S863BR-180K-M1 (F01361)	1 .75 .50	5341 4006 2670	I II III	SF863BR-180K-B5-M1 (F01636)

* Gear Ratio is Approximate. For Actual Gear Ratio Reference Pages 222-231.
** Service Class I (S.F. = 1.00) Service Class II (S.F. = 1.50) Service III (S.F. = 2.00)
Actual Output RPM = Input Speed ÷ Actual Ratio.
For Overhung Load Ratings refer to Page 204.
† For Base / Projecting Shaft / Output Flange see How to Order Page 201.
▭ Indicates Triple Reduction

H

800 Series Right Angle Helical Worm Selection Tables

@ 1750 RPM Input

FOR RATINGS AT OTHER INPUT SPEEDS, SEE TABLES ON PAGES 222-231.
ORDER BY CATALOG NUMBER OR ITEM CODE
FOR STANDARD MOUNTING POSITIONS†

Approx. Output RPM	Ratio*	Non-Flanged			Flanged (Gearmotors)			
		Gear Capacity			Ratings			
		Output Torque (LB-IN.)	Input HP	Catalog No. (Item Code)	Motor HP	Output Torque (LB-IN.)	Service Class**	Catalog No. (Item Code)
8.8	200	1346	0.33	S833BR-200K-M1 (F01226)	.33 .25 .16	1346 1085 723	I I II	SF833BR-200K-B5-M1 (F01440)
		2267	0.5	S843BR-200K-M1 (F01271)	.50 .33 .25	2264 1510 1133	I I III	SF843BR-200K-B5-M1 (F01501)
		5139	1.08	S853BR-200K-M1 (F01317)	1 .75 .50	4756 3567 2378	I II III	SF853BR-200K-B5-M1 (F01569)
		7443	1.49	S863BR-200K-M1 (F01362)	1 .75	4789 3745	II III	SF863BR-200K-B5-M1 (F01637)
8.2	212	1333	0.28	S832BR-212K-M1 (F01204)	.25 .16	1190 793	I II	SF832BR-212K-B5-M1 (F01417)
		2352	0.47	S842BR-212K-M1 (F01249)	.33 .25 .16	1667 1250 833	I II III	SF842BR-212K-B5-M1 (F01467)
		5021	0.97	S852BR-212K-M1 (F01295)	.75 .50	3880 2587	I II	SF852BR-212K-B5-M1 (F01530)
		7607	1.39	S862BR-212K-M1 (F01340)	1 .75 .50	5470 4103 2735	I II III	SF862BR-212K-B5-M1 (F01599)
7.8	225	1311	0.27	S833BR-225K-M1 (F01227)	.25 .16	1213 809	I II	SF833BR-225K-B5-M1 (F01441)
		2346	0.46	S843BR-225K-M1 (F01272)	.33 .25 .16	1700 1274 850	I II III	SF843BR-225K-B5-M1 (F01502)
		5260	0.97	S853BR-225K-M1 (F01318)	.75 .50 .33	4095 2803 1869	I II III	SF853BR-225K-B5-M1 (F01570)
		7405	1.32	S863BR-225K-M1 (F01363)	1 .75 .50	5608 4206 2804	I II III	SF863BR-225K-B5-M1 (F01638)

* Gear Ratio is Approximate. For Actual Gear Ratio Reference Pages 222-231.
** Service Class I (S.F. = 1.00) Service Class II (S.F. = 1.50) Service III (S.F. = 2.00)
Actual Output RPM = Input Speed ÷ Actual Ratio.
For Overhung Load Ratings refer to Page 204.
† For Base / Projecting Shaft / Output Flange see How to Order Page 201.
▭ Indicates Triple Reduction

@ 1750 RPM Input

FOR RATINGS AT OTHER INPUT SPEEDS, SEE TABLES ON PAGES 222-231.
ORDER BY CATALOG NUMBER OR ITEM CODE
FOR STANDARD MOUNTING POSITIONS†

Approx. Output RPM	Ratio*	Non-Flanged			Flanged (Gearmotors)			
		Gear Capacity			Ratings			
		Output Torque (LB-IN.)	Input HP	Catalog No. (Item Code)	Motor HP	Output Torque (LB-IN.)	Service Class**	Catalog No. (Item Code)
7.0	250	1382	0.25	S832BR-250K-M1 (F01206)	.25 .16	1382 920	I II	SF832BR-250K-B5-M1 (F01419)
		2050	0.36	S842BR-250K-M1 (F01251)	.33 .25 .16	1898 1423 949	I II III	SF842BR-250K-B5-M1 (F01471)
		4566	0.75	S852BR-250K-M1 (F01297)	.75 .50 .33	4566 3043 2197	I II III	SF852BR-250K-B5-M1 (F01533)
		7676	1.25	S862BR-250K-M1 (F01342)	1 .75 .50	6139 4604 3069	I II III	SF862BR-250K-B5-M1 (F01602)
6.6	265	1297	0.20	S833BR-265K-M1 (F01228)	.16	1150	I	SF833BR-265K-B5-M1 (F01442)
		1588	0.25	S843BR-265K-M1 (F01273)	.25 .16	1588 1058	I II	SF843BR-265K-B5-M1 (F01503)
		3351	0.49	S853BR-265K-M1 (F01319)	.33 .25 .16	2279 1709 1139	I II III	SF853BR-265K-B5-M1 (F01571)
		6895	0.98	S863BR-265K-M1 (F01364)	.75 .50 .33	5274 3516 2344	I II III	SF863BR-265K-B5-M1 (F01639)
6.2	280	1357	0.18	S833BR-280K-M1 (F01229)	.16	1256	I	SF833BR-280K-B5-M1 (F01443)
		1590	0.23	S843BR-280K-M1 (F01274)	.16	1151	I	SF843BR-280K-B5-M1 (F01504)
		3356	0.44	S853BR-280K-M1 (F01320)	.33 .25 .16	2541 1906 1270	I II III	SF853BR-280K-B5-M1 (F01572)
		7671	0.88	S863BR-280K-M1 (F01365)	.75 .50 .33	6535 4357 2904	I II III	SF863BR-280K-B5-M1 (F01640)
5.6 (CONT.)	315	1311	0.20	S833BR-315K-M1 (F01230)	.16	1092	I	SF833BR-315K-B5-M1 (F01444)

* Gear Ratio is Approximate. For Actual Gear Ratio Reference Pages 222-231.
** Service Class I (S.F. = 1.00) Service Class II (S.F. = 1.50) Service III (S.F. = 2.00)
Actual Output RPM = Input Speed ÷ Actual Ratio.
For Overhung Load Ratings refer to Page 204.
† For Base / Projecting Shaft / Output Flange see How to Order Page 201.
▭ Indicates Triple Reduction

H

800 Series Right Angle Helical Worm Selection Tables

@ 1750 RPM Input

FOR RATINGS AT OTHER INPUT SPEEDS, SEE TABLES ON PAGES 222-231.
ORDER BY CATALOG NUMBER OR ITEM CODE
FOR STANDARD MOUNTING POSITIONS†

Approx. Output RPM	Ratio*	Non-Flanged			Flanged (Gearmotors)			
		Gear Capacity			Ratings			
		Output Torque (LB-IN.)	Input HP	Catalog No. (Item Code)	Motor HP	Output Torque (LB-IN.)	Service Class**	Catalog No. (Item Code)
5.6 (CONT.)	315	2620	0.39	S843BR-315K-M1 (F01275)	.33 .25 .16	2238 1679 1119	I II III	SF843BR-315K-B5-M1 (F01505)
		5252	0.75	S853BR-315K-M1 (F01321)	.75 .50 .33	5252 3595 2397	I II III	SF853BR-315K-B5-M1 (F01573)
		7490	0.94	S863BR-315K-M1 (F01366)	.75 .50 .33	5973 3982 2655	I I II	SF863BR-315K-B5-M1 (F01641)
4.9	360	1177	0.18	S833BR-360K-M1 (F01231)	.16	1089	I	SF833BR-360K-B5-M1 (F01445)
		2496	0.35	S843BR-360K-M1 (F01276)	.33 .25 .16	2376 1782 1188	I I III	SF843BR-360K-B5-M1 (F01506)
		4862	0.63	S853BR-360K-M1 (F01322)	.50 .33 .25	3857 2571 1928	I II III	SF853BR-360K-B5-M1 (F01574)
		7382	0.87	S863BR-360K-M1 (F01367)	.75 .50 .33	6361 4240 2827	I II III	SF863BR-360K-B5-M1 (F01642)
4.4	400	1296	0.13	S833BR-400K-M1 (F01232)	.16	1296	I	SF833BR-400K-B5-M1 (F01446)
		1647	0.16	S843BR-400K-M1 (F01277)	.16	1647	I	SF843BR-400K-B5-M1 (F01507)
		3368	0.32	S853BR-400K-M1 (F01323)	.25 .16	2630 1753	I II	SF853BR-400K-B5-M1 (F01575)
		7686	0.67	S863BR-400K-M1 (F01368)	.50 .33	5733 3822	I III	SF863BR-400K-B5-M1 (F01643)
3.9	450	1279	0.11	S833BR-450K-M1 (F01233)	.16	1279	I	SF833BR-450K-B5-M1 (F01447)
		1572	0.14	S843BR-450K-M1 (F01278)	.16	1572	I	SF843BR-450K-B5-M1 (F01508)
		3305	0.28	S853BR-450K-M1 (F01324)	.25 .16	2950 1966	I II	SF853BR-450K-B5-M1 (F01576)
		7692	0.59	S863BR-450K-M1 (F01369)	.50 .33 .25	6516 4344 3258	I II III	SF863BR-450K-B5-M1 (F01644)

* Gear Ratio is Approximate. For Actual Gear Ratio Reference Pages 222-231.
** Service Class I (S.F. = 1.00) Service Class II (S.F. = 1.50) Service III (S.F. = 2.00)
Actual Output RPM = Input Speed ÷ Actual Ratio.
For Overhung Load Ratings refer to Page 204.
† For Base / Projecting Shaft / Output Flange see How to Order Page 201.
▭ Indicates Triple Reduction

800 Series Right Angle Helical Worm Selection Tables

@ 1750 RPM Input

FOR RATINGS AT OTHER INPUT SPEEDS, SEE TABLES ON PAGES 222-231.
ORDER BY CATALOG NUMBER OR ITEM CODE
FOR STANDARD MOUNTING POSITIONS†

Approx. Output RPM	Ratio*	Non-Flanged			Flanged (Gearmotors)			
		Gear Capacity			Ratings			
		Output Torque (LB-IN.)	Input HP	Catalog No. (Item Code)	Motor HP	Output Torque (LB-IN.)	Service Class**	Catalog No. (Item Code)
3.5	500	1354	0.13	S833BR-500K-M1 (F01234)	.16	1354	I	SF833BR-500K-B5-M1 (F01448)
		2647	0.25	S843BR-500K-M1 (F01279)	.25	2641	I	SF843BR-500K-B5-M1 (F01509)
		5146	0.46	S853BR-500K-M1 (F01325)	.33 .25 .16	3728 2796 1864	I I II	SF853BR-500K-B5-M1 (F01577)
		6913	0.62	S863BR-500K-M1 (F01370)	.50 .33 .25	5573 3715 2786	I II III	SF863BR-500K-B5-M1 (F01645)
3.1	560	1384	0.12	S833BR-560K-M1 (F01235)	.16	1384	I	SF833BR-560K-B5-M1 (F01449)
		2745	0.23	S843BR-560K-M1 (F01280)	.16	1988	I	SF843BR-560K-B5-M1 (F01510)
		5296	0.42	S853BR-560K-M1 (F01326)	.33 .25 .16	4201 3151 2100	I II III	SF853BR-560K-B5-M1 (F01578)
		7200	0.55	S863BR-560K-M1 (F01371)	.50 .33 .25	6543 4362 3272	I II III	SF863BR-560K-B5-M1 (F01646)
2.2	800	1274	0.08	S833BR-800K-M1 (F01236)	--	--	--	--
		2591	0.16	S843BR-800K-M1 (F01281)	.16	2591	I	SF843BR-800K-B5-M1 (F01511)
		5308	0.31	S853BR-800K-M1 (F01327)	.25 .16	4279 2852	I II	SF853BR-800K-B5-M1 (F01579)
		7734	0.43	S863BR-800K-M1 (F01372)	.33 .25 .16	5993 4495 2997	I II III	SF863BR-800K-B5-M1 (F01647)
1.9	900	1247	0.07	S833BR-900K-M1 (F01237)	--	--	--	--
		2494	0.14	S843BR-900K-M1 (F01282)	.16	2494	I	SF843BR-900K-B5-M1 (F01512)
		5099	0.27	S853BR-900K-M1 (F01328)	.25 .16	4719 3146	I II	SF853BR-900K-B5-M1 (F01580)
		7659	0.38	S863BR-900K-M1 (F01373)	.33 .25 .16	6715 5036 3358	I II III	SF863BR-900K-B5-M1 (F01648)

* Gear Ratio is Approximate. For Actual Gear Ratio Reference Pages 222-231.
** Service Class I (S.F. = 1.00) Service Class II (S.F. = 1.50) Service III (S.F. = 2.00)
Actual Output RPM = Input Speed ÷ Actual Ratio.
For Overhung Load Ratings refer to Page 204.
† For Base / Projecting Shaft / Output Flange see How to Order Page 201.
▭ Indicates Triple Reduction

800 Series Right Angle Helical Worm Ratings

Non-Flanged; Input Speeds 1750, 1450 and 1160 RPM

Service Factor 1.0*

Catalog Number	Input Speed								
	1750 RPM			1450 RPM			1160 RPM		
	Approx. Output RPM	Output Torque (LB-IN)(Max.)	Input HP (Max.)	Approx. Output RPM	Output Torque (LB-IN)(Max.)	Input HP (Max.)	Approx. Output RPM	Output Torque (LB-IN) (Max.)	Input HP (Max.)
832BR-8K	218	689	2.65	181	717	2.30	145	751	1.95
842BR-8K	218	1100	4.39	181	1152	3.81	145	1209	3.23
852BR-8K	218	1678	6.66	181	1829	6.00	145	1991	5.28
862BR-8K	218	2910	11.40	181	3292	10.20	145	3607	8.98
832BR-11K	159	742	2.14	131	777	1.86	105	820	1.58
842BR-11K	159	1194	3.57	131	1258	3.10	105	1316	2.63
852BR-11K	159	1929	5.52	131	2090	4.95	105	2279	4.33
862BR-11K	159	3479	9.38	131	3781	8.39	105	4112	7.34
832BR-12K	145	787	1.95	120	816	1.70	96	865	1.44
842BR-12K	145	1264	3.25	120	1324	2.83	96	1382	2.39
852BR-12K	145	2010	5.22	120	2165	4.67	96	2351	4.09
862BR-12K	145	3646	8.77	120	3952	7.84	96	4292	6.85
832BR-14K	125	790	1.79	103	831	1.56	82	870	1.32
842BR-14K	125	1288	2.99	103	1344	2.60	82	1400	2.19
852BR-14K	125	2060	4.85	103	2212	4.33	82	2398	3.79
862BR-14K	125	3827	8.20	103	4118	7.32	82	4472	6.38
832BR-16K	109	737	1.70	90	768	1.49	72	808	1.27
842BR-16K	109	1218	2.72	90	1273	2.38	72	1343	2.03
852BR-16K	109	2710	5.92	90	2922	5.33	72	3162	4.68
862BR-16K	109	4191	9.03	90	4583	8.09	72	4990	7.10
832BR-18K	97	864	1.50	80	898	1.30	64	944	1.10
842BR-18K	97	1388	2.50	80	1445	2.17	64	1512	1.83
852BR-18K	97	2162	4.21	80	2319	3.75	64	2497	3.27
862BR-18K	97	4208	7.10	80	4502	6.33	64	4882	5.51
832BR-20K	87	860	1.43	72	895	1.24	58	941	1.05
842BR-20K	87	1391	2.37	72	1450	2.06	58	1514	1.74
852BR-20K	87	2345	3.90	72	2492	3.47	58	2688	3.02
862BR-20K	87	4400	6.58	72	4698	5.86	58	5077	5.10
832BR-22K	79	804	1.39	65	826	1.22	52	887	1.04
842BR-22K	79	1321	2.23	65	1383	1.95	52	1453	1.66
852BR-22K	79	3086	4.90	65	3265	4.34	52	3443	3.72
862BR-22K	79	4784	7.41	65	5142	6.64	52	5585	5.82
832BR-25K	70	843	1.28	58	883	1.12	46	929	0.95
842BR-25K	70	1389	2.04	58	1464	1.79	46	1328	1.52
852BR-25K	70	3177	4.62	58	3339	4.06	46	3516	3.47
862BR-25K	70	5022	6.94	58	5435	6.21	46	5873	5.45
832BR-28K	62	862	1.17	51	891	1.03	41	943	0.87
842BR-28K	62	1363	1.88	51	1430	1.65	41	1491	1.39
852BR-28K	62	3200	4.24	51	3339	3.72	41	3496	3.17
862BR-28K	62	5290	6.49	51	5359	5.81	41	6043	5.06

* For applications requiring a service factor greater than 1.0, multiply the design torque or horsepower by the application factor, found on pages 354 & 355.
Actual Output RPM = Input Speed ÷ Actual Ratio.
For Base / Projecting Shaft / Output Flange see How to Order Page 201.
For Overhung Load Ratings refer to Page 204.

H

Non-Flanged; Input Speeds 690 and 100 RPM

Service Factor 1.0*

Catalog Number	Input Speed						Approx. Wt. (LB)	Actual Gear Ratio
	690 RPM			100 RPM				
	Approx. Output RPM	Output Torque (LB-IN)(Max.)	Input HP (Max.)	Approx. Output RPM	Output Torque (LB-IN)(Max.)	Input HP (Max.)		
832BR-8K	86	799	1.25	12	1056	.25	24	8.591
842BR-8K	86	1296	2.06	12	1403	.34	32	8.182
852BR-8K	86	2232	3.52	12	2683	.63	39	8.043
862BR-8K	86	4013	6.01	12	5265	1.18	70	8.232
832BR-11K	63	879	1.02	9.1	1200	.21	24	11.605
842BR-11K	63	1388	1.67	9.1	1541	.28	32	11.053
852BR-11K	63	2496	2.86	9.1	3511	.61	39	11.282
862BR-11K	63	4563	4.90	9.1	6820	1.10	70	11.573
832BR-12K	57	928	0.93	8.3	1310	.20	24	13.500
842BR-12K	57	1470	1.53	8.3	1580	.25	32	12.857
852BR-12K	57	2598	2.72	8.3	3491	.55	39	12.432
862BR-12K	57	4739	4.55	8.3	7019	1.01	70	12.972
832BR-14K	49	942	0.85	7.1	1306	.18	24	14.954
842BR-14K	49	1426	1.39	7.1	1610	.23	32	14.242
852BR-14K	49	2627	2.50	7.1	3388	.49	39	13.714
862BR-14K	49	4916	4.22	7.1	7254	.93	70	14.560
832BR-16K	43	865	0.82	6.2	1225	.18	24	16.364
842BR-16K	43	1437	1.31	6.2	1866	.27	32	16.364
852BR-16K	43	3408	3.04	6.2	4329	.61	39	16.087
862BR-16K	43	5625	4.82	6.2	7183	.98	70	15.932
832BR-18K	38	997	0.70	5.5	1419	.15	24	19.500
842BR-18K	38	1606	1.17	5.5	1622	.18	32	18.571
852BR-18K	38	2740	2.16	5.5	3174	.38	39	16.774
862BR-18K	38	5375	3.65	5.5	7537	.77	70	18.490
832BR-20K	34	996	0.67	5.0	1382	.14	24	20.610
842BR-20K	34	1619	1.12	5.0	1715	.18	32	19.630
852BR-20K	34	2927	1.98	5.0	3325	.34	39	19.643
862BR-20K	34	5542	3.35	5.0	7546	.68	70	20.962
832BR-22K	31	933	0.66	4.5	1268	.14	24	22.105
842BR-22K	31	1539	1.06	4.5	2115	.23	32	22.105
852BR-22K	31	3685	2.40	4.5	4642	.48	39	22.564
862BR-22K	31	6101	3.83	4.5	7423	.74	70	22.105
832BR-25K	28	989	0.61	4.0	1348	.13	24	25.714
842BR-25K	28	1634	0.98	4.0	2212	.21	32	25.714
852BR-25K	28	3702	2.25	4.0	4689	.44	39	24.865
862BR-25K	28	6332	3.54	4.0	7527	.67	70	25.106
832BR-28K	25	1023	0.57	3.6	1379	.12	24	28.485
842BR-28K	25	1630	0.90	3.6	2135	.19	32	27.428
852BR-28K	25	3611	2.03	3.6	4633	.40	39	27.428
862BR-28K	25	6402	3.23	3.6	7566	.60	70	28.182

* For applications requiring a service factor greater than 1.0, multiply the design torque or horsepower by the application factor, found on pages 354 & 355.
Actual Output RPM = Input Speed ÷ Actual Ratio.
For Base / Projecting Shaft / Output Flange see How to Order Page 201.
For Overhung Load Ratings refer to Page 204.

H

800 Series Right Angle Helical Worm Ratings

Non-Flanged; Input Speeds 1750, 1450 and 1160 RPM

Service Factor 1.0*

Catalog Number	Input Speed								
	1750 RPM			1450 RPM			1160 RPM		
	Approx. Output RPM	Output Torque (LB-IN)(Max.)	Input HP (Max.)	Approx. Output RPM	Output Torque (LB-IN)(Max.)	Input HP (Max.)	Approx. Output RPM	Output Torque (LB-IN) (Max.)	Input HP (Max.)
832BR-32K	54	971	1.00	45	995	0.86	36	1056	0.73
842BR-32K	54	1560	1.66	45	1618	1.44	36	1702	1.22
852BR-32K	54	2813	2.98	45	2986	2.64	36	3214	2.29
862BR-32K	54	5184	4.93	45	5526	4.37	36	5913	3.78
832BR-36K	48	936	0.99	40	969	0.87	32	1030	0.74
842BR-36K	48	1525	1.59	40	1600	1.38	32	1653	1.17
852BR-36K	48	3262	3.59	40	3397	3.14	32	3553	2.67
862BR-36K	48	5768	5.65	40	6174	5.03	32	6491	4.24
832BR-40K	43	933	0.94	36	972	0.82	29	1015	0.70
842BR-40K	43	1527	1.51	36	1587	1.31	29	1672	1.12
852BR-40K	43	3453	3.28	36	3587	2.87	29	3734	2.43
862BR-40K	43	6045	5.25	36	6292	4.58	29	6569	3.87
832BR-45K	38	1032	0.80	32	1088	0.70	25	1157	0.60
842BR-45K	38	1669	1.34	32	1752	1.16	25	1767	0.95
852BR-45K	38	3165	2.37	32	3308	2.06	25	3297	1.65
862BR-45K	38	5810	3.95	32	6151	3.49	25	6555	3.00
832BR-50K	35	1000	0.71	29	1032	0.62	23	1118	0.54
842BR-50K	35	1612	1.19	29	1639	1.01	23	1618	0.81
852BR-50K	35	3248	2.24	29	3427	1.98	23	3492	1.63
862BR-50K	35	5930	3.79	29	6278	3.34	23	6696	2.87
832BR-56K	31	1033	0.74	25	1050	0.64	20	1125	0.55
842BR-56K	31	1670	1.18	25	1733	1.03	20	1806	0.87
852BR-56K	31	3820	2.63	25	3951	2.28	20	4129	1.93
862BR-56K	31	6500	4.20	25	6718	3.65	20	6992	3.08
832BR-63K	27	1040	0.67	23	1088	0.59	18	1151	0.50
842BR-63K	27	1716	1.07	23	1787	0.94	18	1898	0.80
852BR-63K	27	3899	2.39	23	4050	2.08	18	4193	1.75
862BR-63K	27	6720	3.76	23	6954	3.27	18	7217	2.77
832BR-71K	24	1192	0.59	20	1246	0.51	16	1353	0.44
842BR-71K	24	1739	0.88	20	1704	0.73	16	1799	0.58
852BR-71K	24	3225	1.71	20	3216	1.42	16	3275	1.13
862BR-71K	24	6645	2.94	20	6972	2.58	16	7420	2.20
832BR-80K	21	1250	0.54	18	1296	0.47	14	1368	0.40
842BR-80K	21	1619	0.74	18	1611	0.61	14	1596	0.49
852BR-80K	21	3453	1.50	18	3436	1.24	14	3494	0.99
862BR-80K	21	6783	2.77	18	7143	2.42	14	7483	2.05
832BR-90K	19	1187	0.57	16	1243	0.50	12	1285	0.42
842BR-90K	19	1934	0.91	16	1997	0.79	12	2113	0.68
852BR-90K	19	4178	1.82	16	4294	1.57	12	4455	1.33
862BR-90K	19	7514	3.05	16	7520	2.56	12	7555	2.08

* For applications requiring a service factor greater than 1.0, multiply the design torque or horsepower by the application factor, found on pages 354 & 355.
Actual Output RPM = Input Speed ÷ Actual Ratio.
For Base / Projecting Shaft / Output Flange see How to Order Page 201.
For Overhung Load Ratings refer to Page 204.

H

Non-Flanged; Input Speeds 690 and 100 RPM

Service Factor 1.0*

Catalog Number	Input Speed						Approx. Wt. (LB)	Actual Gear Ratio
	690 RPM			100 RPM				
	Approx. Output RPM	Output Torque (LB-IN)(Max.)	Input HP (Max.)	Approx. Output RPM	Output Torque (LB-IN)(Max.)	Input HP (Max.)		
832BR-32K	21	1129	.47	3.1	1360	.09	24	33.710
842BR-32K	21	1761	.76	3.1	1692	.11	32	32.105
852BR-32K	21	3496	1.50	3.1	3407	.22	39	31.500
862BR-32K	21	6446	2.48	3.1	7440	.43	70	33.480
832BR-36K	19	1107	.48	2.8	1327	.09	24	37.143
842BR-36K	19	1756	.75	2.8	2547	.17	32	37.143
852BR-36K	19	3751	1.70	2.8	4745	.34	39	33.548
862BR-36K	19	6469	2.57	2.8	7105	.45	70	35.790
832BR-40K	17	1081	.45	2.5	1381	.09	24	39.259
842BR-40K	17	1781	.72	2.5	2534	.16	32	39.259
852BR-40K	17	3949	1.55	2.5	4902	.30	39	39.286
862BR-40K	17	6928	2.46	2.5	7518	.42	70	40.571
832BR-45K	15	1312	.41	2.2	1360	.06	24	45.500
842BR-45K	15	1821	.59	2.2	1639	.08	32	43.333
852BR-45K	15	3346	1.01	2.2	3080	.14	39	45.333
862BR-45K	15	7018	2.03	2.2	7488	.31	70	47.316
832BR-50K	14	1271	.37	2.0	1366	.06	24	49.500
842BR-50K	14	1691	.51	2.0	1539	.07	32	47.143
852BR-50K	14	3556	1.00	2.0	3349	.14	39	49.286
862BR-50K	14	7481	1.93	2.0	7489	.29	70	50.518
832BR-56K	12	1287	.38	1.8	1296	.06	24	56.190
842BR-56K	12	2063	.60	1.8	2677	.12	32	56.190
852BR-56K	12	4645	1.31	1.8	5225	.23	39	55.454
862BR-56K	12	7514	2.14	1.8	7402	.31	70	55.714
832BR-63K	11	1296	.34	1.6	1481	.06	24	64.210
842BR-63K	11	2161	.55	1.6	2760	.11	32	64.210
852BR-63K	11	4765	1.20	1.6	5336	.21	39	63.000
862BR-63K	11	7526	1.87	1.6	7498	.27	70	64.800
832BR-71K	10	1378	.27	1.4	1353	.04	24	73.500
842BR-71K	10	1749	.36	1.4	1632	.05	32	70.000
852BR-71K	10	3264	.70	1.4	3135	.10	39	65.454
862BR-71K	10	7420	1.39	1.4	7454	.20	70	73.923
832BR-80K	9.0	1419	.25	1.2	1504	.04	24	82.833
842BR-80K	9.0	1621	.30	1.2	1815	.04	32	78.889
852BR-80K	9.0	3573	.61	1.2	3498	.09	39	82.222
862BR-80K	9.0	7511	1.27	1.2	7346	.18	70	80.944
832BR-90K	8.0	1360	.29	1.1	1360	.04	24	86.667
842BR-90K	8.0	2230	.46	1.1	2720	.08	32	86.667
852BR-90K	8.0	4730	.91	1.1	5110	.14	39	90.667
862BR-90K	8.0	7520	1.36	1.1	7520	.20	70	91.579

* For applications requiring a service factor greater than 1.0, multiply the design torque or horsepower by the application factor, found on pages 354 & 355.
Actual Output RPM = Input Speed ÷ Actual Ratio.
For Base / Projecting Shaft / Output Flange see How to Order Page 201.
For Overhung Load Ratings refer to Page 204.

H

800 Series Right Angle Helical Worm Ratings

Non-Flanged; Input Speeds 1750, 1450 and 1160 RPM

Service Factor 1.0*

Catalog Number	Input Speed								
	1750 RPM			1450 RPM			1160 RPM		
	Approx. Output RPM	Output Torque (LB-IN)(Max.)	Input HP (Max.)	Approx. Output RPM	Output Torque (LB-IN)(Max.)	Input HP (Max.)	Approx. Output RPM	Output Torque (LB-IN) (Max.)	Input HP (Max.)
832BR-100K	17	1120	0.51	14	1188	0.44	11	1256	0.38
842BR-100K	17	1835	0.81	14	1926	0.71	11	1998	0.60
852BR-100K	17	4225	1.71	14	4365	1.47	11	4552	1.25
862BR-100K	17	7539	2.87	14	7518	2.41	11	7500	1.96
833BR-100K	17	1302	0.47	14	1346	0.40	11	1326	0.32
843BR-100K	17	1700	0.63	14	1667	0.52	11	1656	0.42
853BR-100K	17	3477	1.22	14	3452	1.01	11	3443	0.81
863BR-100K	17	7173	2.34	14	7455	2.02	11	7455	1.63
832BR-112K	15	1360	0.44	12	1342	0.36	10	1351	0.29
842BR-112K	15	1412	0.48	12	1427	0.40	10	1464	0.33
852BR-112K	15	3088	0.99	12	3076	0.83	10	3138	0.68
862BR-112K	15	6594	1.97	12	6533	1.63	10	6533	1.30
833BR-118K	14	1321	0.42	12	1334	0.35	9	1346	0.28
843BR-118K	14	1698	0.55	12	1666	0.46	9	1649	0.37
853BR-118K	14	3436	1.07	12	3446	0.88	9	3369	0.71
863BR-118K	14	7434	2.14	12	7450	1.79	9	7410	1.44
832BR-125K	14	1311	0.36	11	1299	0.31	9	1324	0.25
842BR-125K	14	1248	0.36	11	1237	0.31	9	1261	0.25
852BR-125K	14	2630	0.75	11	2636	0.63	9	2692	0.52
862BR-125K	14	4832	1.28	11	4829	1.06	9	4794	0.85
833BR-132K	13	1217	0.42	10	1300	0.37	8	1340	0.31
843BR-132K	13	1953	0.66	10	2088	0.58	8	2259	0.51
853BR-132K	13	4596	1.42	10	4856	1.26	8	5196	1.09
863BR-132K	13	7410	2.21	10	7520	1.87	8	7520	1.52
832BR-140K	12	1310	0.40	10	1338	0.35	8	1342	0.28
842BR-140K	12	2117	0.64	10	2191	0.56	8	2337	0.48
852BR-140K	12	4143	1.30	10	4321	1.13	8	4460	0.95
862BR-140K	12	7520	2.02	10	7525	1.69	8	7561	1.37
833BR-150K	11	1237	0.40	9	1313	0.35	7	1342	0.29
843BR-150K	11	1580	0.63	9	2151	0.56	7	2516	0.49
853BR-150K	11	4604	1.35	9	4888	1.20	7	5192	1.04
863BR-150K	11	7143	1.99	9	7161	1.66	7	7187	1.35
832BR-160K	10	1364	0.37	9	1372	0.32	7	1382	0.26
842BR-160K	10	2216	0.59	9	2264	0.52	7	2430	0.45
852BR-160K	10	4736	1.19	9	4925	1.03	7	5130	0.87
862BR-160K	10	7504	1.86	9	7489	1.56	7	7508	1.26
833BR-160K	10	1320	0.32	9	1316	0.26	7	1326	0.21
843BR-160K	10	1693	0.41	9	1647	0.34	7	1648	0.27
853BR-160K	10	3406	0.79	9	3368	0.66	7	3394	0.53
863BR-160K	10	7431	1.51	9	7290	1.26	7	7461	1.01

* For applications requiring a service factor greater than 1.0, multiply the design torque or horsepower by the application factor, found on pages 354 & 355.
Actual Output RPM = Input Speed ÷ Actual Ratio.
For Base / Projecting Shaft / Output Flange see How to Order Page 201.
For Overhung Load Ratings refer to Page 204.
▭ Indicates Triple Reduction

H

Non-Flanged; Input Speeds 690 and 100 RPM

Service Factor 1.0*

Catalog Number	Input Speed						Approx. Wt. (LB)	Actual Gear Ratio
	690 RPM			100 RPM				
	Approx. Output RPM	Output Torque (LB-IN)(Max.)	Input HP (Max.)	Approx. Output RPM	Output Torque (LB-IN)(Max.)	Input HP (Max.)		
832BR-100K	6.9	1356	.25	1.0	1360	.04	24	94.286
842BR-100K	6.9	2260	.41	1.0	2496	.07	32	94.286
852BR-100K	6.9	5128	.85	1.0	5260	.13	39	98.571
862BR-100K	6.9	7588	1.28	1.0	7520	.18	70	97.778
833BR-100K	6.9	1377	.20	1.0	1386	.03	32	103.250
843BR-100K	6.9	1700	.26	1.0	1710	.04	40	98.333
853BR-100K	6.9	3597	.51	1.0	3283	.07	47	100.551
863BR-100K	6.9	7596	1.00	1.0	7157	.14	83	102.668
832BR-112K	6.2	1391	.18	.89	1360	.03	24	114.333
842BR-112K	6.2	1766	.23	.89	1710	.03	32	108.889
852BR-112K	6.2	3170	.42	.89	3370	.07	39	108.889
862BR-112K	6.2	6592	.80	.89	6160	.11	70	111.370
833BR-118K	5.8	1356	.17	.85	1360	.03	32	117.987
843BR-118K	5.8	1656	.22	.85	1530	.03	40	112.368
853BR-118K	5.8	3385	.43	.85	3370	.06	47	114.903
863BR-118K	5.8	7505	.89	.85	7390	.13	83	116.637
832BR-125K	5.5	1405	.16	.80	1360	.02	24	129.937
842BR-125K	5.5	1338	.16	.80	1410	.02	32	123.750
852BR-125K	5.5	2835	.33	.80	2990	.05	39	123.750
862BR-125K	5.5	4870	.52	.80	4470	.07	70	126.583
833BR-132K	5.2	1430	.20	.78	1360	.03	32	130.000
843BR-132K	5.2	2638	.36	.78	2670	.06	40	130.000
853BR-132K	5.2	5260	.72	.78	5260	.10	47	132.932
863BR-132K	5.2	7520	.99	.78	7520	.14	83	130.000
832BR-140K	4.9	1360	.18	.71	1360	.03	24	140.000
842BR-140K	4.9	2739	.34	.71	2603	.05	32	140.000
852BR-140K	4.9	4897	.63	.71	4604	.09	39	130.909
862BR-140K	4.9	7520	.89	.71	7520	.13	70	143.077
833BR-150K	4.6	1378	.18	.67	1380	.03	32	137.407
843BR-150K	4.6	2659	.34	.67	2660	.05	40	137.407
853BR-150K	4.6	5192	.59	.67	5260	.09	47	140.507
863BR-150K	4.6	7674	.87	.67	7550	.14	83	140.774
832BR-160K	4.3	1407	.16	.62	1360	.02	24	157.778
842BR-160K	4.3	2770	.31	.62	2470	.04	32	157.778
852BR-160K	4.3	5200	.58	.62	5690	.09	39	164.444
862BR-160K	4.3	7515	.82	.62	7520	.12	70	156.667
833BR-160K	4.3	1362	.13	.62	1360	.02	32	159.250
843BR-160K	4.3	1719	.17	.62	1720	.02	40	151.667
853BR-160K	4.3	3400	.32	.62	3470	.05	47	155.089
863BR-160K	4.3	7500	.62	.62	7500	.09	83	167.859

* For applications requiring a service factor greater than 1.0, multiply the design torque or horsepower by the application factor, found on pages 354 & 355.
Actual Output RPM = Input Speed ÷ Actual Ratio.
For Base / Projecting Shaft / Output Flange see How to Order Page 201.
For Overhung Load Ratings refer to Page 204.
▭ Indicates Triple Reduction

H

800 Series Right Angle Helical Worm Ratings

Non-Flanged; Input Speeds 1750, 1450 and 1160 RPM

Service Factor 1.0*

Catalog Number	Input Speed								
	1750 RPM			1450 RPM			1160 RPM		
	Approx. Output RPM	Output Torque (LB-IN)(Max.)	Input HP (Max.)	Approx. Output RPM	Output Torque (LB-IN)(Max.)	Input HP (Max.)	Approx. Output RPM	Output Torque (LB-IN) (Max.)	Input HP (Max.)
833BR-180K	9.7	1247	0.27	8.1	1205	0.23	6.4	1205	0.18
843BR-180K	9.7	1554	0.35	8.1	1539	0.29	6.4	1599	0.23
853BR-180K	9.7	3161	0.68	8.1	3154	0.56	6.4	3200	0.45
863BR-180K	9.7	7427	1.39	8.1	7453	1.16	6.4	7455	0.93
833BR-200K	8.7	1346	0.31	7.2	1367	0.26	5.8	1367	0.21
843BR-200K	8.7	2267	0.50	7.2	2393	0.45	5.8	2584	0.39
853BR-200K	8.7	5139	1.08	7.2	5243	0.92	5.8	5248	0.75
863BR-200K	8.7	7443	1.49	7.2	7428	1.25	5.8	7428	1.01
832BR-212K	8.2	1333	0.28	6.8	1324	0.23	5.5	1371	0.19
842BR-212K	8.2	2352	0.47	6.8	2365	0.40	5.5	2421	0.33
852BR-212K	8.2	5021	0.97	6.8	5107	0.83	5.5	5230	0.68
862BR-212K	8.2	7607	1.39	6.8	7586	1.17	5.5	7666	0.95
833BR-225K	7.8	1311	0.27	6.4	1366	0.23	5.1	1319	0.18
843BR-225K	7.8	2346	0.46	6.4	2539	0.41	5.1	2725	0.36
853BR-225K	7.8	5298	0.97	6.4	5291	0.82	5.1	5295	0.66
863BR-225K	7.8	7405	1.32	6.4	7461	1.11	5.1	7506	0.90
832BR-250K	7.0	1382	0.25	5.8	1398	0.21	4.6	1398	0.17
842BR-250K	7.0	2050	0.36	5.8	2041	0.31	4.6	2080	0.25
852BR-250K	7.0	4566	0.75	5.8	4768	0.63	4.6	4800	0.52
862BR-250K	7.0	7676	1.25	5.8	7671	1.05	4.6	7625	0.85
833BR-265K	6.6	1297	0.20	5.5	1342	0.16	4.4	1308	0.13
843BR-265K	6.6	1588	0.25	5.5	1597	0.21	4.4	1629	0.17
853BR-265K	6.6	3351	0.49	5.5	3267	0.40	4.4	3267	0.32
863BR-265K	6.6	6895	0.98	5.5	6850	0.82	4.4	6866	0.66
833BR-280K	6.2	1357	0.18	5.2	1386	0.15	4.1	1360	0.12
843BR-280K	6.2	1590	0.23	5.2	1681	0.19	4.1	1680	0.15
853BR-280K	6.2	3356	0.44	5.2	3313	0.36	4.1	3392	0.29
863BR-280K	6.2	7671	0.88	5.2	7671	0.73	4.1	7710	0.59
833BR-315K	5.6	1311	0.20	4.6	1318	0.17	3.7	1360	0.14
843BR-315K	5.6	2620	0.39	4.6	2770	0.34	3.7	2770	0.27
853BR-315K	5.6	5252	0.73	4.6	5255	0.61	3.7	5309	0.50
863BR-315K	5.6	7490	0.94	4.6	7475	0.79	3.7	7474	0.64
833BR-360K	4.9	1177	0.18	4.0	1269	0.15	3.2	1269	0.12
843BR-360K	4.9	2496	0.35	4.0	2537	0.29	3.2	2537	0.23
853BR-360K	4.9	4862	0.63	4.0	4897	0.53	3.2	4900	0.43
863BR-360K	4.9	7382	0.87	4.0	7509	0.73	3.2	7512	0.59
833BR-400K	4.4	1296	0.13	3.6	1391	0.11	2.9	1391	0.09
843BR-400K	4.4	1647	0.16	3.6	1656	0.14	2.9	1653	0.11
853BR-400K	4.4	3368	0.32	3.6	3215	0.26	2.9	3290	0.21
863BR-400K	4.4	7686	0.67	3.6	7704	0.56	2.9	7718	0.44

* For applications requiring a service factor greater than 1.0, multiply the design torque or horsepower by the application factor, found on pages 354 & 355.
Actual Output RPM = Input Speed ÷ Actual Ratio.
For Base / Projecting Shaft / Output Flange see How to Order Page 201.
For Overhung Load Ratings refer to Page 204.
▭ Indicates Triple Reduction

Non-Flanged; Input Speeds 690 and 100 RPM

Service Factor 1.0*

Catalog Number	Input Speed						Approx. Wt. (LB)	Actual Gear Ratio
	690 RPM			100 RPM				
	Approx. Output RPM	Output Torque (LB-IN)(Max.)	Input HP (Max.)	Approx. Output RPM	Output Torque (LB-IN)(Max.)	Input HP (Max.)		
833BR-180K	3.8	1205	.11	.55	1260	.70	32	173.250
843BR-180K	3.8	1600	.14	.55	1700	.71	40	165.000
853BR-180K	3.8	3400	.27	.55	3440	.73	47	168.723
863BR-180K	3.8	7500	.57	.55	7500	.78	83	182.494
833BR-200K	3.4	1360	.13	.50	1360	.57	32	196.667
843BR-200K	3.4	2620	.26	.50	2620	.58	40	196.667
853BR-200K	3.4	5555	.48	.50	5260	.60	47	201.103
863BR-200K	3.4	7520	.65	.50	7520	.63	83	198.712
832BR-212K	3.2	1432	.12	.47	1360	.57	24	217.778
842BR-212K	3.2	2548	.21	.47	2610	.58	32	217.778
852BR-212K	3.2	5602	.44	.47	5260	.60	39	217.778
862BR-212K	3.2	7700	.61	.47	7700	.63	70	215.555
833BR-225K	3.1	1355	.11	.44	1360	.57	32	224.737
843BR-225K	3.1	2880	.23	.44	2610	.58	40	224.737
853BR-225K	3.1	5554	.42	.44	5260	.60	47	229.806
863BR-225K	3.1	7520	.57	.44	7520	.63	83	225.750
832BR-250K	2.8	1360	.11	.40	1360	.57	24	247.500
842BR-250K	2.8	2206	.16	.40	2150	.58	32	247.500
852BR-250K	2.8	4800	.33	.40	4680	.60	39	247.500
862BR-250K	2.8	7770	.54	.40	7427	.62	70	245.000
833BR-265K	2.6	1335	.08	.38	1360	.70	32	257.250
843BR-265K	2.6	1589	.10	.38	1680	.70	40	245.000
853BR-265K	2.6	3387	.20	.38	3310	.72	47	250.526
863BR-265K	2.6	7080	.41	.38	7260	.76	83	242.367
833BR-280K	2.5	1360	.07	.36	1360	.01	32	289.917
843BR-280K	2.5	1712	.09	.36	1670	.01	40	276.111
853BR-280K	2.5	3382	.18	.36	3310	.02	47	282.339
863BR-280K	2.5	7710	.36	.36	7250	.05	83	304.445
833BR-315K	2.2	1446	.09	.32	1360	.01	32	303.333
843BR-315K	2.2	2782	.17	.32	2580	.02	40	303.333
853BR-315K	2.2	5445	.31	.32	5220	.05	47	310.175
863BR-315K	2.2	7520	.41	.32	7520	.06	83	324.889
833BR-360K	1.9	1270	.07	.28	1360	.01	32	330.000
843BR-360K	1.9	2537	.14	.28	2570	.02	40	330.000
853BR-360K	1.9	5079	.27	.28	5190	.04	47	337.444
863BR-360K	1.9	7520	.38	.28	7520	.05	83	353.214
833BR-400K	1.7	1391	.05	.25	1360	.01	32	400.167
843BR-400K	1.7	1730	.07	.25	1660	.01	40	381.111
853BR-400K	1.7	3378	.13	.25	3290	.02	47	389.708
863BR-400K	1.7	7798	.27	.25	7718	.04	83	403.190

* For applications requiring a service factor greater than 1.0, multiply the design torque or horsepower by the application factor, found on pages 354 & 355.
Actual Output RPM = Input Speed ÷ Actual Ratio.
For Base / Projecting Shaft / Output Flange see How to Order Page 201.
For Overhung Load Ratings refer to Page 204.
▭ Indicates Triple Reduction

H

800 Series Right Angle Helical Worm Ratings

Non-Flanged; Input Speeds 1750, 1450 and 1160 RPM

Service Factor 1.0*

Catalog Number	Input Speed								
	1750 RPM			1450 RPM			1160 RPM		
	Approx. Output RPM	Output Torque (LB-IN)(Max.)	Input HP (Max.)	Approx. Output RPM	Output Torque (LB-IN)(Max.)	Input HP (Max.)	Approx. Output RPM	Output Torque (LB-IN) (Max.)	Input HP (Max.)
833BR-450K	3.9	1279	0.11	3.2	1263	0.09	2.6	1403	0.08
843BR-450K	3.9	1572	0.14	3.2	1627	0.12	2.6	1671	0.10
853BR-450K	3.9	3303	0.28	3.2	3276	0.23	2.6	3380	0.19
863BR-450K	3.9	7692	0.59	3.2	7612	0.49	2.6	7612	0.39
833BR-500K	3.5	1354	0.13	2.9	1359	0.11	2.3	1390	0.09
843BR-500K	3.5	2647	0.25	2.9	2684	0.21	2.3	2690	0.17
853BR-500K	3.5	5146	0.46	2.9	5266	0.39	2.3	5266	0.31
863BR-500K	3.5	6913	0.62	2.9	6892	0.52	2.3	6892	0.42
833BR-560K	3.1	1384	0.12	2.6	1392	0.10	2.0	1392	0.08
843BR-560K	3.1	2745	0.23	2.6	2691	0.19	2.0	2691	0.15
853BR-560K	3.1	5296	0.42	2.6	5240	0.35	2.0	5240	0.28
863BR-560K	3.1	7200	0.55	2.6	7156	0.46	2.0	7200	0.37
833BR-800K	2.2	1274	0.08	1.8	1322	0.07	1.4	1416	0.06
843BR-800K	2.2	2591	0.16	1.8	2737	0.14	1.4	2740	0.11
853BR-800K	2.2	5308	0.31	1.8	5373	0.26	1.4	5376	0.21
863BR-800K	2.2	7734	0.43	1.8	7734	0.36	1.4	7774	0.29
833BR-900K	1.9	1247	0.07	1.6	1490	0.06	1.3	1490	0.05
843BR-900K	1.9	2494	0.14	1.6	2621	0.12	1.3	2630	0.10
853BR-900K	1.9	5099	0.27	1.6	5402	0.23	1.3	5420	0.18
863BR-900K	1.9	7659	0.38	1.6	7771	0.32	1.3	7775	0.26

* For applications requiring a service factor greater than 1.0, multiply the design torque or horsepower by the application factor, found on pages 354 & 355.
Actual Output RPM = Input Speed ÷ Actual Ratio.
For Base / Projecting Shaft / Output Flange see How to Order Page 201.
For Overhung Load Ratings refer to Page 204.
▭ Indicates Triple Reduction

H

Non-Flanged; Input Speeds 690 and 100 RPM

Service Factor 1.0*

Catalog Number	Input Speed						Approx. Wt. (LB)	Actual Gear Ratio
	690 RPM			100 RPM				
	Approx. Output RPM	Output Torque (LB-IN)(Max.)	Input HP (Max.)	Approx. Output RPM	Output Torque (LB-IN)(Max.)	Input HP (Max.)		
833BR-450K	1.5	1454	.05	.22	1454	.01	32	454.781
843BR-450K	1.5	1662	.06	.22	1660	.01	40	433.125
853BR-450K	1.5	3360	.11	.22	3280	.02	47	442.895
863BR-450K	1.5	7612	.24	.22	7190	.03	83	458.217
833BR-500K	1.4	1390	.05	.20	1360	.01	32	490.000
843BR-500K	1.4	2650	.10	.20	2540	.01	40	490.000
853BR-500K	1.4	5270	.20	.20	5410	.03	47	501.053
863BR-500K	1.4	7288	.27	.20	7520	.04	83	469.091
833BR-560K	1.2	1412	.05	.18	1360	.01	32	552.222
843BR-560K	1.2	2700	.09	.18	2530	.01	40	552.222
853BR-560K	1.2	5260	.18	.18	5130	.02	47	564.678
863BR-560K	1.2	7520	.24	.18	7520	.03	83	589.250
833BR-800K	.86	1453	.03	.12	1360	.01	32	762.222
843BR-800K	.86	2778	.07	.12	2510	.01	40	762.222
853BR-800K	.86	5460	.13	.12	5080	.02	47	779.415
863BR-800K	.86	7734	.18	.12	7520	.03	83	780.370
833BR-900K	.78	1490	.03	.11	1360	.00	32	866.250
843BR-900K	.78	2630	.06	.11	2500	.01	40	866.250
853BR-900K	.78	5450	.11	.11	5060	.02	47	885.789
863BR-900K	.78	7775	.16	.11	7520	.02	83	886.875

* For applications requiring a service factor greater than 1.0, multiply the design torque or horsepower by the application factor, found on pages 354 & 355.
Actual Output RPM = Input Speed ÷ Actual Ratio.
For Base / Projecting Shaft / Output Flange see How to Order Page 201.
For Overhung Load Ratings refer to Page 204.
▭ Indicates Triple Reduction

H

SF800BR Series; NEMA C-Face Input; Double Reduction

Basic Model



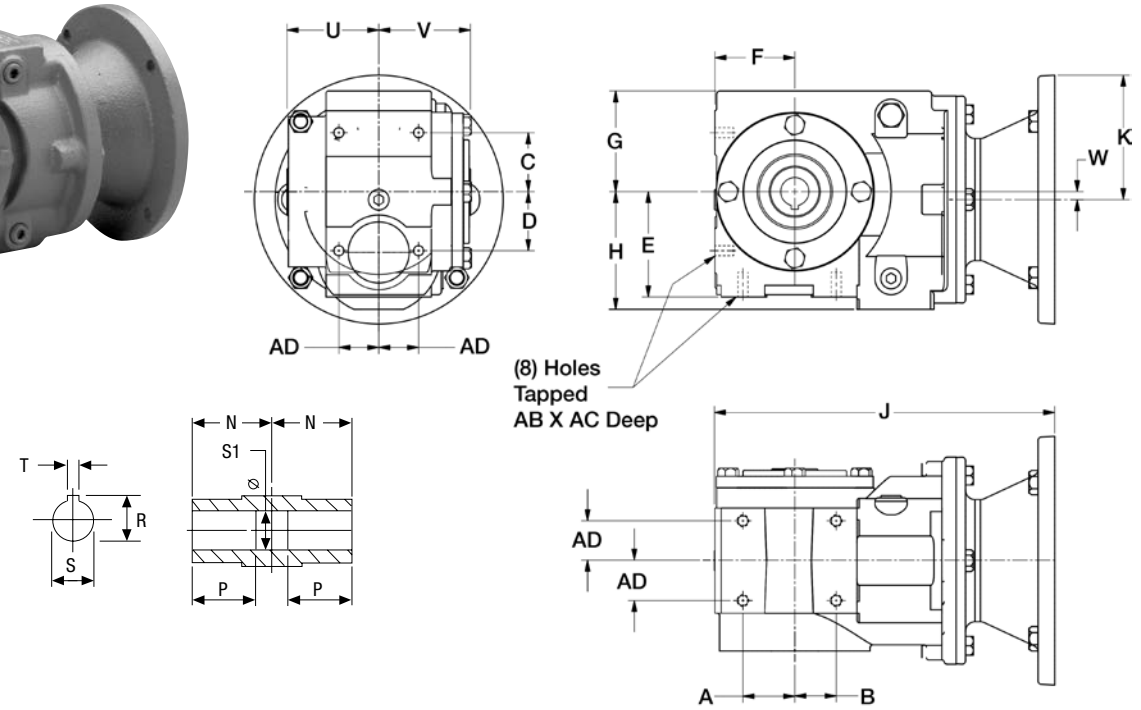

H

Size	A	B	C	D	E	F	G	H	J NEMA Mounting 56C B5	J NEMA Mounting 140TC B7	J NEMA Mounting 180TC B9	J NEMA Mounting 210TC B11	K NEMA Mounting 56C B5	K NEMA Mounting 140TC B7	K NEMA Mounting 180TC B9	K NEMA Mounting 210TC B11
SF832BR	1.38	1.10	1.57	1.57	2.80	2.13	2.68	3.13	9.04	9.04	—	—	3.31	3.31	—	—
SF842BR	1.38	1.77	2.09	2.56	3.39	2.52	2.95	3.66	9.79	9.79	10.61	—	3.31	3.31	4.63	—
SF852BR	1.77	2.17	2.56	3.03	3.78	2.68	3.46	4.36	10.57	10.57	11.40	—	3.31	3.31	4.63	—
SF862BR	2.20	2.60	2.99	3.78	4.72	3.54	3.94	5.49	12.29	12.29	14.65	14.65	3.31	3.31	4.63	4.63

Size	N	P	R	S +.001 -.000	S1	T	U	V	W	AB	AC	AD
SF832BR	2.44	1.25	.84	.7500	.76	.19	2.76	2.24	.21	5/16-18	.50	1.06
SF842BR	2.56	1.25	1.37	1.250	1.26	.25	2.93	2.56	.59	3/8-16	.56	1.10
SF852BR	2.76	1.38	1.53	1.375*	1.39	.31	2.76	2.76	.53	3/8-16	.75	1.34
SF862BR	3.54	3.00	1.67	1.500*	1.51	.38	3.54	3.17	.67	7/16-14	.75	1.57

Output shaft rotation, relative to input shaft rotation, is identical for double reduction and opposite for triple reduction.
Option kit dimensions on pages 236 & 237.
* Maximum bore size is 1.625, contact factory for availability.

SF800BR Series; NEMA C-Face Input; Triple Reduction

Basic Model

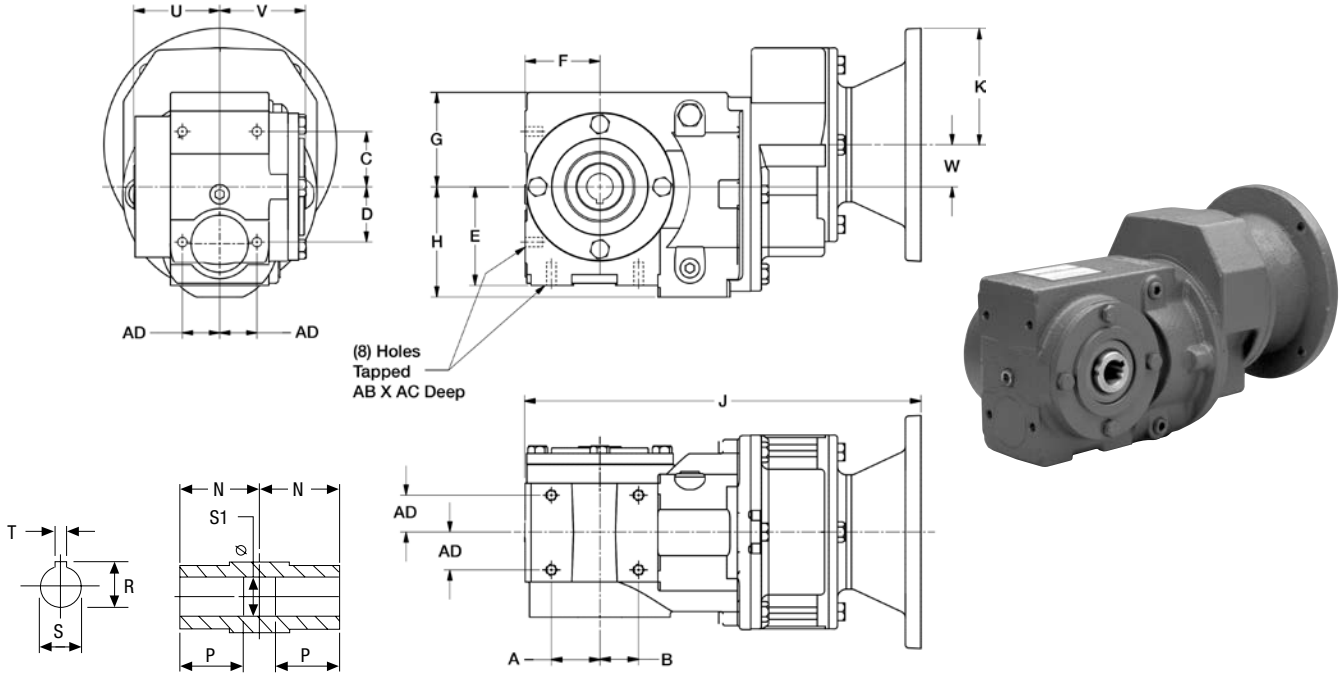

H

Size	A	B	C	D	E	F	G	H	J NEMA Mounting 56C B5	J NEMA Mounting 140TC B7	K NEMA Mounting 56C B5	K NEMA Mounting 140TC B7
SF833BR	1.38	1.10	1.57	1.57	2.80	2.13	2.68	3.13	11.24	11.24	3.31	3.31
SF843BR	1.38	1.77	2.09	2.56	3.39	2.52	2.95	3.66	12.00	12.00	3.31	3.31
SF853BR	1.77	2.17	2.56	3.03	3.78	2.68	3.46	4.41	13.17	13.17	3.31	3.31
SF863BR	2.20	2.60	2.99	3.78	4.72	3.54	3.94	5.49	16.00	16.00	3.31	3.31

Size	N	P	R	S +.001 -.000	S1	T	U	V	W	AB	AC	AD
SF833BR	2.44	1.25	.84	.7500	.76	.19	2.76	2.24	1.20	5/16-18	.50	1.06
SF843BR	2.56	1.25	1.37	1.250	1.26	.25	2.93	2.56	.81	3/8-16	.56	1.10
SF853BR	2.76	1.35	1.47	1.375*	1.39	.31	2.76	2.76	.89	3/8-16	.75	1.34
SF863BR	3.54	3.00	1.62	1.500*	1.51	.38	3.54	3.17	1.16	7/16-14	.75	1.57

Output shaft rotation, relative to input shaft rotation, is identical for double reduction and opposite for triple reduction.
Option kit dimensions on pages 236 & 237.
* Maximum bore size is 1.625, contact factory for availability.

S800BR Series; Non-Flanged; Double Reduction

Basic Model



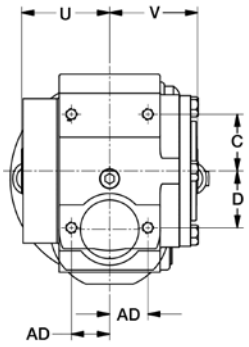

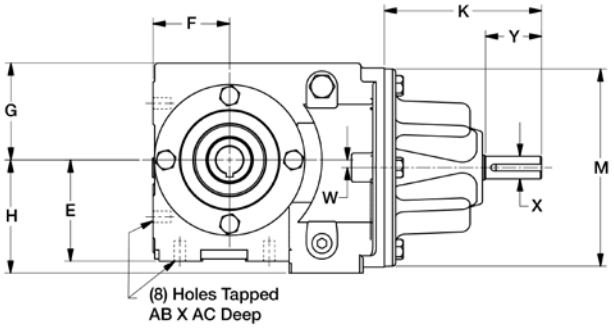

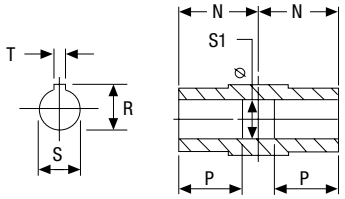

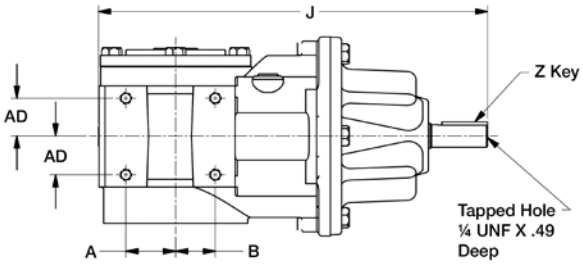

H

Size	A	B	C	D	E	F	G	H	J	K	M	N	P
S832BR	1.38	1.10	1.57	1.57	2.80	2.13	2.68	3.13	10.79	4.37	5.51	2.44	1.25
S842BR	1.38	1.77	2.09	2.56	3.39	2.52	2.95	3.66	11.54	4.37	5.51	2.56	1.25
S852BR	1.77	2.17	2.56	3.03	3.78	2.68	3.46	4.36	12.32	4.37	5.51	2.76	1.38
S862BR	2.20	2.60	2.99	3.78	4.72	3.54	3.94	5.49	14.57	4.37	7.09	3.54	3.00

Size	R	S +.001 -.000	S1	T	U	V	W	X +.000 -.001	Y	Z - KEY Sq.	Z - KEY Lgth.	AB	AC	AD
S832BR	.84	.7500	.76	.19	2.76	2.24	.21	.625	1.57	.19	1.28	5/16-18	.56	1.06
S842BR	1.37	1.250	1.26	.25	2.93	2.56	.59	.625	1.57	.19	1.28	3/8-16	.56	1.10
S852BR	1.53	1.375*	1.39	.31	2.76	2.76	.53	.625	1.57	.19	1.28	3/8-16	.75	1.34
S862BR	1.67	1.500*	1.51	.38	3.54	3.17	.67	.750	1.57	.19	1.28	7/16-14	.75	1.57

Output shaft rotation, relative to input shaft rotation, is identical for double reduction and opposite for triple reduction.
Option kit dimensions on pages 236 & 237.
* Maximum bore size is 1.625, contact factory for availability.

S800BR Series; Non-Flanged; Triple Reduction

Basic Model

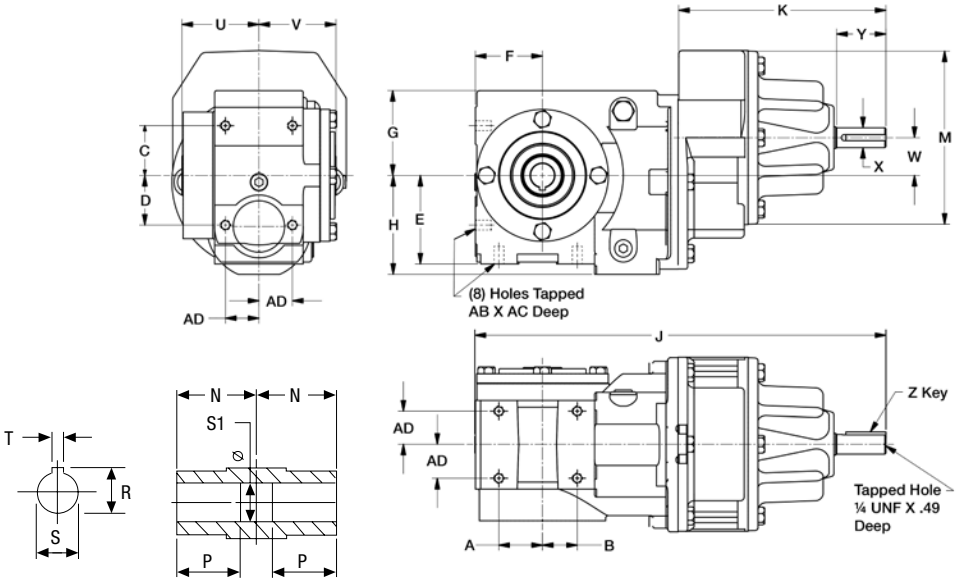

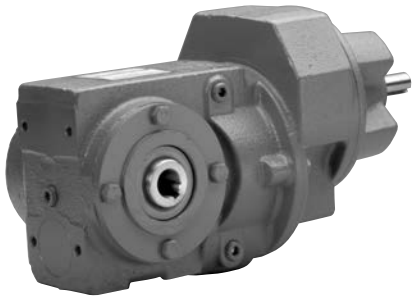

H

Size	A	B	C	D	E	F	G	H	J	K	M	N	P
S833BR	1.38	1.10	1.57	1.57	2.80	2.13	2.68	3.13	12.99	6.57	5.51	2.44	1.25
S843BR	1.38	1.77	2.09	2.56	3.39	2.52	2.95	3.66	13.74	6.57	5.51	2.56	1.25
S853BR	1.77	2.17	2.56	3.03	3.78	2.68	3.46	4.36	14.53	6.57	5.51	2.76	1.38
S863BR	2.20	2.60	2.99	3.78	4.72	3.54	3.94	5.49	17.17	6.97	5.51	3.54	2.00

Size	R	S +.001 -.000	S1	T	U	V	W	X +.000 -.001	Y	Z - KEY Sq.	Z - KEY Lgth.	AB	AC	AD
S833BR	.84	.7500	.76	.19	2.76	2.24	1.20	.625	1.57	.19	1.28	5/16-18	.59	1.06
S843BR	1.37	1.250	1.26	.25	2.93	2.56	.89	.625	1.57	.19	1.28	3/8-16	.79	1.10
S853BR	1.53	1.375*	1.39	.31	2.76	2.76	.89	.625	1.57	.19	1.28	3/8-16	.79	1.34
S863BR	1.67	1.500*	1.51	.38	3.54	3.17	1.16	.625	1.57	.19	1.28	7/16-14	.79	1.57

Output shaft rotation, relative to input shaft rotation, is identical for double reduction and opposite for triple reduction.
Option kit dimensions on pages 236 & 237.
* Maximum bore size is 1.625, contact factory for availability.

Accessories

Output Flange Kits



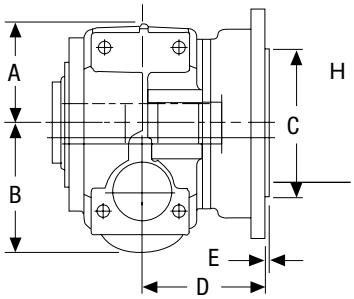

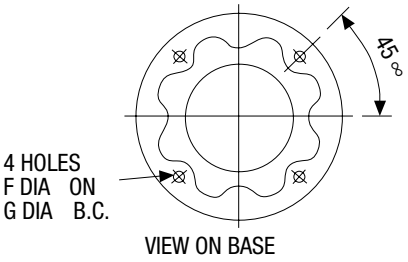

Size	A	B	C	D	E	F	G	H	Catalog No. (Item Code)
832BR 833BR	2.66	3.13	4.3312 4.3304	2.95	.16	.35	5.12	6.30	XS830BR-11VK (59611)
842BR 843BR	2.95	3.36	4.3312 4.3304	3.39	.16	.35	5.12	6.30	XS840BR-11VK (59523)
852BR 853BR	3.43	4.41	5.1187 5.1177	4.21	.14	.43	6.50	7.88	XS850BR-11VK (59528)
862BR 863BR	4.04	5.49	5.1187 5.1177	4.72	.14	.43	6.50	7.88	XS860BR-11VK (59533)

H

Torque Arm Kits



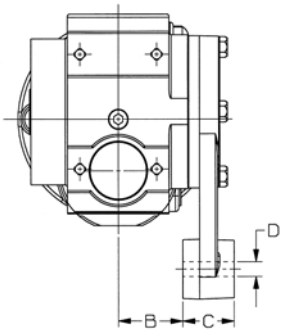

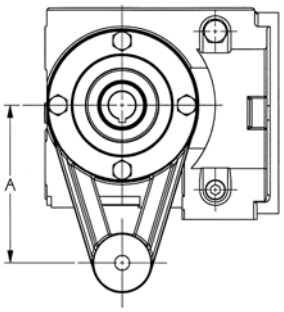

Size	A	B	C	D	Catalog No. (Item Code)
832BR 833BR	4.33	1.85	1.42	.41	XS830BR-76K (59612)
842BR 843BR	5.12	2.05	1.42	.41	XS840BR-76K (59524)
852BR 853BR	6.30	2.05	1.42	.41	XS850BR-76K (59529)
862BR 863BR	7.87	2.81	1.73	.65	XS860BR-76K (59534)

*Available on carrier side only (left side when facing flange input).

Accessories

Base Kits

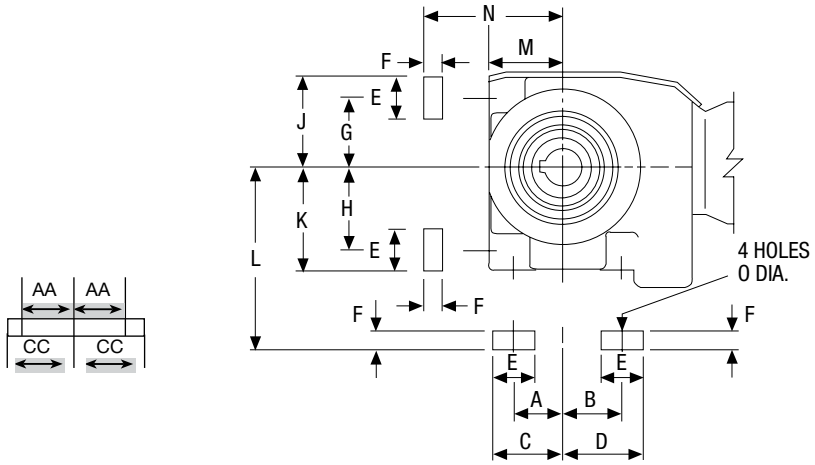



Size	A	B	C	D	E	F	G	H	J	K	L	M	N	O	AA	CC	Catalog No. (Item Code)
832BR 833BR	1.38	1.10	1.85	1.61	.98	.35	1.57	1.57	2.07	2.07	3.15	2.13	2.48	.35	1.77	2.17	XS830BR-11K (59610)
842BR 843BR	1.38	1.77	2.09	2.44	1.38	.55	2.09	2.56	2.78	3.25	3.94	2.52	3.07	.43	1.97	2.44	XS840BR-11K (59522)
852BR 853BR	1.77	2.17	2.56	2.95	1.57	.63	2.56	3.03	3.35	3.82	4.41	2.68	3.31	.43	2.17	2.68	XS850BR-11K (59527)
862BR 863BR	2.36	2.76	3.19	3.58	1.97	.79	3.15	3.94	3.98	4.76	5.51	3.54	4.33	.55	2.56	3.15	XS860BR-11K (59532)

H

Output Shaft Kits

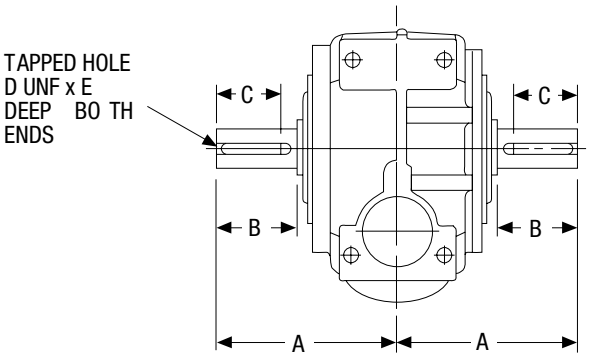

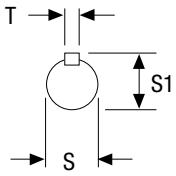

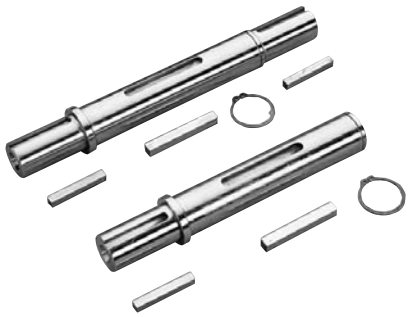

Size	A	B	C	D	E	S +.000 -.001	S1	T	Catalog No. (Item Code) Single Projection	Catalog No. (Item Code) Double Projection
832BR 833BR	3.94	1.38	1.28	1/4	.63	.750	.83	.19	XS830BR-3PAK (59608)	XS830BR-3PBK (59609)
842BR 843BR	4.53	1.81	1.69	1/4	.63	1.000	1.10	.25	XS840BR-3PAK (59520)	XS840BR-3PBK (59521)
852BR 853BR	5.28	2.36	2.12	3/4	.87	1.250	1.36	.25	XS850BR-3PAK (59525)	XS850BR-3PBK (59526)
862BR 863BR	6.30	2.48	2.34	1/2	1.12	1.375	1.51	.31	XS860BR-3PAK (59530)	XS860BR-3PBK (59531)

Single left / right or double projection shafts.

800 Series Parts List – Right Angle Helical Worm Gear Drives

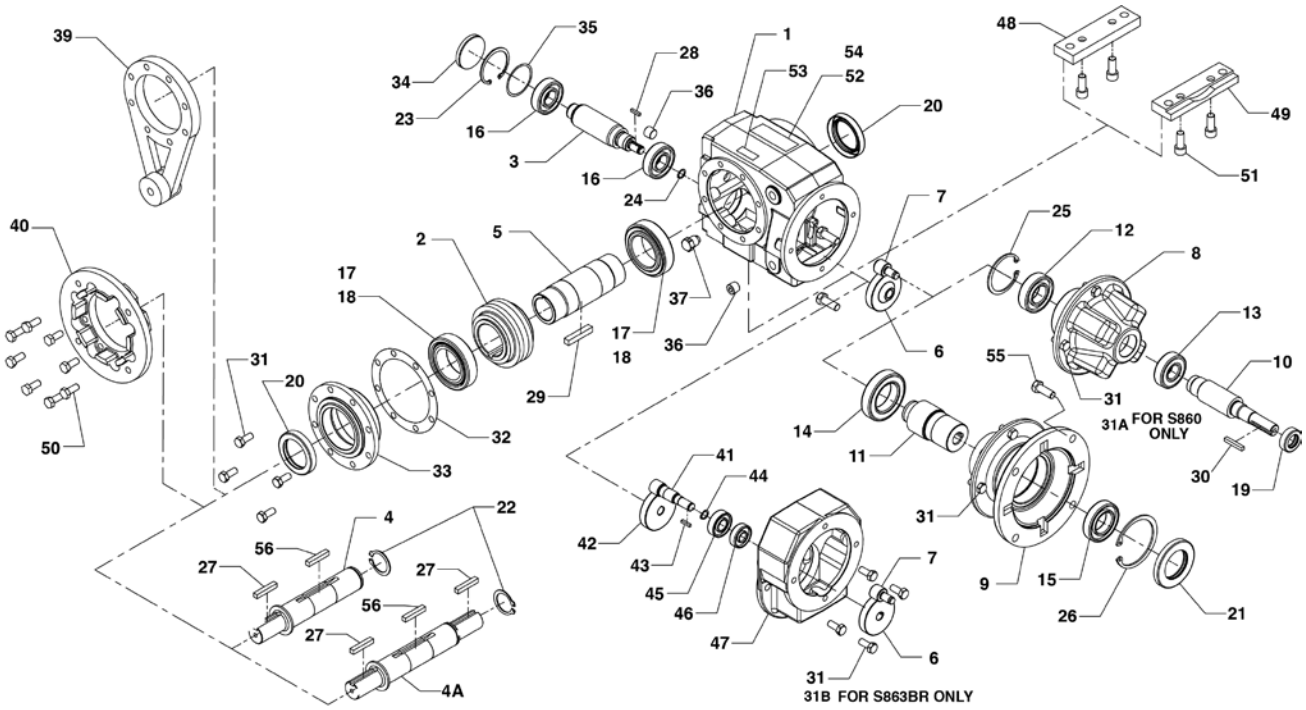

Part No.	Description of Part
1	HOUSING
2	O/P WORM GEAR
3	O/P WORM
4	OUTPUT SHAFT, PROJECTION (SINGLE)
4A	OUTPUT SHAFT, PROJECTION (DOUBLE)
5	OUTPUT SHAFT, HOLLOW
6	HELICAL GEAR, 1ST REDUCTOR
7	HELICAL PINION, 1ST REDUCTOR
8	INPUT BEARING CARRIER
9	MOTOR FLANGE (B5/B7-B9/B11)
10	INPUT REDUCTOR SHAFT
11	INPUT MOTOR SHAFT
12	BEARING, INPUT SHAFT (INBOARD)
13	BEARING, INPUT SHAFT (OUTBOARD)
14	BEARING, MOTOR SHAFT (INBOARD)
15	BEARING, MOTOR SHAFT (OUTBOARD)
16	BEARING, OUTPUT PINION
17	BEARING, OUTPUT SHAFT (CUP)
18	BEARING, OUTPUT SHAFT (CONE)
19	OIL SEAL, INPUT REDUCTOR SHAFT
20	OIL SEAL, OUTPUT SHAFT
21	OIL SEAL, INPUT MOTOR SHAFT
22	RETAINING RING, OUTPUT SHAFT
23	RETAINING RING, OUTPUT PINION (HOUSING)
24	RETAINING RING, 1ST REDUCTOR GEAR
25	RETAINING RING, INPUT CARRIER
26	RETAINING RING, B5/B7-B9/B11 FLANGE
27	KEY, OUTPUT SHAFT PROJECTION

Part No.	Description of Part
28	KEY, 1ST REDUCTION GEAR
29	KEY, OUTPUT SHAFT HOLLOW
30	KEY, INPUT REDUCTOR
31	HEX HEAD CAP SCREWS
32	OUTPUT SHIM
33	OUTPUT BEARING CARRIER
34	BORE PLUG, OUTPUT PINION
35	OUTPUT PINION SHIM
36	PLUG, PIPE
37	PLUG, OIL VENT
39	TORQUE ARM
40	OUTPUT FLANGE 11V BASE
41	HELICAL PINION, 2ND REDUCTOR (TRIPLE)
42	HELICAL GEAR, 2ND REDUCTOR (TRIPLE)
43	KEY, HELICAL PINION (TRIPLE)
44	RETAINING RING, HELICAL PINION
45	BEARING, HELICAL PINION (TRPL) OUTBOARD
46	BEARING, HELICAL GEAR (TRPL)
47	HOUSING, TRIPLE REDUCTION
48	MOUNTING FOOT
49	MOUNTING FOOT
50	SOCKET HEAD CAPSCREW
51	ALLEN HEAD CAPSCREWS
52	NAMEPLATE
53	SYNTHETIC OIL LEVEL
54	NAMEPLATE TAPE
55	MOTOR BOLTS
56	HOLLOW-TO-SOLID SHAFT KEY



Section Contents

HM Series Features / How to Order 240

HM Series standard products 241

Mounting Assemblies. 242

Lubrication / Operating Instructions 242-243

Helical Multiplier Ratings. 244

Helical Multiplier Dimentions 245

Features / How to Order

Use alone as either a speed reducer or increaser or in combination with a 700 Series worm gear reducer to create an efficient right angle double reduction speed reducer.

- Close grained cast iron housing and flanges
- Hardened steel helical gearing for long life
- Anti-friction bearings
- Double lip seals guard against oil leakage
- Brass spring loaded breather plug keeps out dirt and water
- Optional steel bolt on base
- Double bearing design on input and output shaftt

Unit Size	Optional Base Kits	
	Catalog Description	Item Code
1	HMF1 Base Kit	83501
2	HMF2 Base Kit	83502
3	HMF3 Base Kit	83503



Flanged

Numbering System

HMF - 2 - 1.5 - K - B5 - B7 – B

Type
HMF-Quill Flange Input

Size
1
2
3

Ratio
1.5:1
2:1
3:1
4:1
5:1

Lubrication
K – Klubersynth UH1 6-460

Input Flange Size
B5 – 56C
B7 – 140TC
B9 – 180TC
B11 – 210TC

Output Flange Size
B5 – 56C
B7 – 140TC
B9 – 180TC
B11 – 210TC

Mounting Position
Horizonal:
A
B
C
D
Vertical:
F

Available Styles

Model	Input	Output
HMF1	B5	B5
HMF 2	B5	B5
	B5	B7
	B7	B5
HMF3	B7	B7
	B9	B9
	B9	B11
	B11	B9
	B11	B11

NEMA C-Face Models

Catalog Number	Item Code
HMF1-1.5K-B5-B5	F05001
HMF1-2K-B5-B5	F05002
HMF1-3K-B5-B5	F05003
HMF1-4K-B5-B5	F05004
HMF1-5K-B5-B5	F05005
HMF2-1.5K-B5-B5	F05006
HMF2-1.5K-B5-B7	F05007
HMF2-1.5K-B7-B5	F05008
HMF2-1.5K-B7-B7	F05009
HMF2-2K-B5-B5	F05010
HMF2-2K-B5-B7	F05011
HMF2-2K-B7-B5	F05012
HMF2-2K-B7-B7	F05013
HMF2-3K-B5-B5	F05014
HMF2-3K-B5-B7	F05015
HMF2-3K-B7-B5	F05016
HMF2-3K-B7-B7	F05017
HMF2-4K-B5-B5	F05018
HMF2-4K-B5-B7	F05019
HMF2-4K-B7-B5	F05020
HMF2-4K-B7-B7	F05021
HMF2-5K-B5-B5	F05022
HMF2-5K-B5-B7	F05023
HMF2-5K-B7-B5	F05024
HMF2-5K-B7-B7	F05025

Catalog Number	Item Code
HMF3-1.5K-B11-B11	F05026
HMF3-1.5K-B11-B9	F05027
HMF3-1.5K-B9-B11	F05028
HMF3-1.5K-B9-B9	F05029
HMF3-2K-B11-B11	F05030
HMF3-2K-B11-B9	F05031
HMF3-2K-B9-B11	F05032
HMF3-2K-B9-B9	F05033
HMF3-3K-B11-B11	F05034
HMF3-3K-B11-B9	F05035
HMF3-3K-B9-B11	F05036
HMF3-3K-B9-B9	F05037
HMF3-4K-B11-B11	F05038
HMF3-4K-B11-B9	F05039
HMF3-4K-B9-B11	F05040
HMF3-4K-B9-B9	F05041
HMF3-5K-B11-B11	F05042
HMF3-5K-B11-B9	F05043
HMF3-5K-B9-B11	F05044
HMF3-5K-B9-B9	F05045

Helical Multiplier Lubrication

Horizontal Mounting

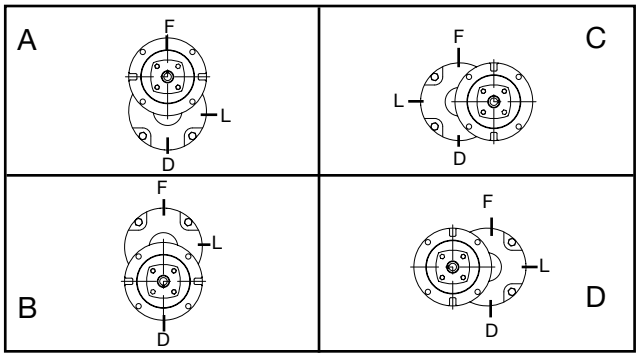

Vertical Mounting

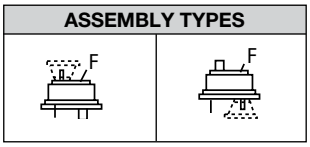

Recommended Lubricants

The following tables indicate the type and viscosity of lubricant suitable for reducers operating at various temperatures.

Lubrication and maintenance instructions are provided with each speed reducer. These instructions should be followed for best results. It is important that the proper type of oil be used since many oils are not suitable for the lubrication of gears. Various types of gearing require different types of lubricants.

The lubricant must remain free from oxidation and contamination by water or debris since only a very thin film of oil stands between efficient operation and failure. To assure long service life, the reducer should be periodically drained (preferably while warm) and refilled to the proper level with a recommended gear oil. Under normal environmental conditions oil changes, are suggested after the initial 250 hours of operation, and thereafter, at regular intervals of 2500 hours or every 6 months. Synthetic lubricants will allow extended lubrication intervals due to its increased resistance to thermal and oxidation degradation. It is suggested that the initial oil change be made at 1500 hours and, thereafter, at 5000 hour intervals.

During the initial period of operation, higher than normal operating temperatures may be seen. This is due to the initial break-in of the gear set. The temperature of Helical Gear Reducers may reach 160°F.

Enclosed Helical

Ambient (Room) Temperature	Recommended Oil (or equivalent)	Viscosity Range S&S @ 100°F	Oil Type	ISO Viscosity Grade No.
–20° to 225°F ‡ (-29°C to 107°C)	Klubersynth* UH1 6-460	1950/2500	PAG	460
–30° to 225°F ‡ (-34°C to 107°C)	Mobile SHC634	1950/2500	PAO	320/460

Recommended Lubricant	Boston Gear Item Code
	Quart
Klubersynth UH1 6-460	65159
Mobile SHC634	51493

CAUTION: Relubricate more frequently, if drive is operated in high ambient temperatures or unusually contaminated atmospheres. High loads and operating temperatures will also require more frequent relubrication.

*Synthetic recommendation is exclusively for Klubersynth UH1 6-460.

‡The UH1 6-460 lubricant will perform at temperatures considerably higher than 225°F. However, the factory should always be consulted prior to operating at higher temperatures, as damage may occur to oil seals and other components.

Drain Plug must be installed in the lower most location of the housing. This plug will be on the input shaft side of the housing for positions B, C, D and A, may be either side for A.

The **Vented Filler Plug** should be installed in the uppermost location. This plug will be on the input shaft side for positions A, C, or D, on either side for B and must be tightened into position.

Level Plug position will be as indicated for horizontal positions. For vertical positions the oil level is established by an oil level distance measured from the outer surface of the housing from the oil filler hole.

Size	Flanged		Non-Flanged	
	Weight (lbs.)	Capacity (ozs)	Weight (lbs.)	Capacity (ozs)
1	18	11	14	11
2	25	14	21	14
3	50	28	43	28

Installation, Lubrication and Operation Instructions

Warning: *Boston Gear speed reducers are normally shipped without lubricant. They must be filled to the proper level with the recommended lubricant before operation.*

These instructions must be read thoroughly before installing or operating speed reducers. File instructions for future reference.

CAUTION

- For safe operation of any gear drive, all rotating shafts and auxiliary components must be shielded to conform with applicable safety standards. You must consider overall operational system safety at all times.
- When using a gear drive to raise or lower a load, such as in hoisting applications, provision must be made for external braking. Under no conditions should a speed reducer be considered self-locking.
- Mounting of speed reducers in overhead positions may be hazardous. Use of external guides or supports is strongly recommended for overhead mounting.

General Instructions

1. When mounting, use maximum possible bolt size and secure gear drive to a rigid foundation. Periodic inspection of all bolts is recommended.
2. Align all shafts accurately. Improper alignment can result in failure. Use of flexible couplings is recommended to compensate for slight misalignment.
3. Arrange the drain and breather plug per your mounting position as indicated on page 230. The breather plug should also be located in the Fill position.
4. Auxiliary drive components (such as sprockets, gears and pulleys) should be mounted on the shafts as close as possible to the housing to minimize effects of overhung loads. Avoid force fits that might damage bearings or gears.
5. Gear drives are nameplated for 1750 RPM Input Speed and Class I Service. For lower Input Speeds and other Service Class, refer to catalog rating information.
6. Input speeds of 1750 and lower are shown in catalog rating tables for speed reducing applications. This does not represent the maximum speed. Since speed limitation is based on pitching velocity and varies with size and ratio.

Instructions for Flanged Models

HMF (Quill Type Input)

1. Assemble the key to the motor shaft and coat the quill bore with anti-seize compound. Insert the motor shaft into the reducer input shaft.
2. Rotate the motor to proper position and firmly secure to flange with four hex-head cap screws.

CAUTION - If the motor does not readily seat itself, check to determine if key has moved axially along motor shaft, causing interference. Staking of the keyway adjacent to the motor key will facilitate this procedure.

Location of Filler, Level and Drain Plugs

Helical-Multiplier reducers may be mounted in any position shown.

Filler, level and drain plugs are completely interchangeable and should be arranged to suit the required mounting positions.

Horsepower and Torque Capacities (Service Factor 1.0)

Series Size			HMF Size 1			HMF Size 2			HMF Size 3		
				Output			Output			Output	
Ratio	Input RPM	Output RPM	Input HP	HP	Torque (Lb. In.)	Input HP	HP	Torque (Lb. In.)	Input HP	HP	Torque (Lb. In.)
1.5	1750	1167	3.29	3.19	172	13.60	13.19	712	17.79	17.26	932
2	1750	875	2.74	2.66	192	11.76	11.41	822	15.38	14.92	1075
3	1750	583	2.06	2.00	216	9.48	9.20	944	12.39	12.02	1299
4	1750	437	1.45	1.41	203	6.88	6.67	962	8.99	8.72	1258
5	1750	350	1.05	1.02	183	5.06	4.91	884	6.61	6.41	1155

Output Shaft Thrust Rating (lbs.)

	1.5:1	2:1	3:1	4:1	5:1
HMF1	153	169	193	213	230
HMF2	230	253	289	319	345
HMF3	313	345	394	435	470

Overhung Loads (lbs.)

	HMF Size 1	HMF Size 2		HMF Size 3	
Input	200	200		350	
Output	315	B5 375	B7 750	B9 1100	B11 1135

Ratings Shown Reflect Maximum Gear Capacity With KLUBERSYNTH UH1 6-460 Lubricant.

Overhung Load is at centerline of output shaft projection and with NO THRUST Load.

Maximum Input Speed 1750 RPM

HMF Basic

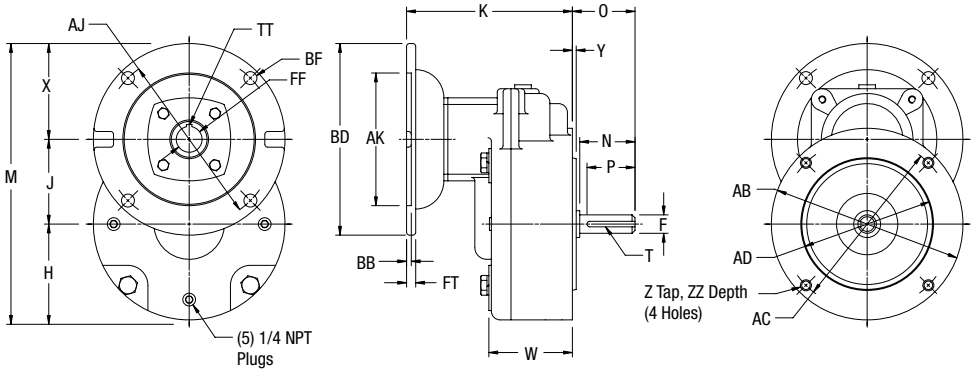



HMF with Base

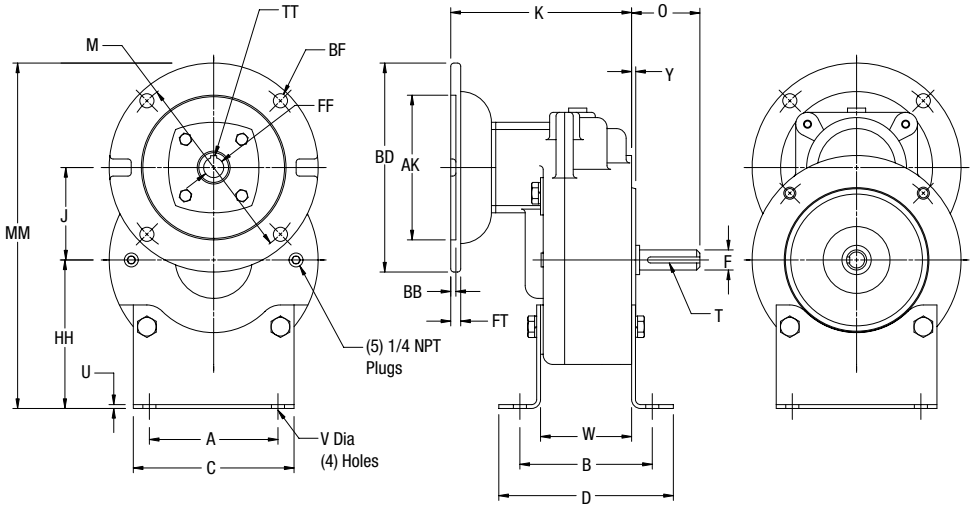



ALL DIMENSIONS IN INCHES

Size	Output Flange	Foot				Main Dimensions										
		A	B	C	D	F	H	HH	J	K	M	MM	N	O	P	T
1	B5	4.00	3.87	5.00	5.18	0.625	2.39	4.62	1.675	4.19	7.31	9.54	1.89	2.04	1.57	3/16X3/32
2	B5	4.00	4.12	5.00	5.44	0.625	3.37	4.62	2.875	5.00	9.49	10.74	1.84	1.90	1.57	3/16X3/32
	B7	4.00	4.12	5.00	5.44	0.875	3.37	4.62	2.875	5.00	9.49	10.74	1.84	1.90	1.57	3/16X3/32
3	B9	5.13	4.74	6.37	6.15	1.125	4.25	4.81	2.875	6.44	11.63	12.19	2.50	3.31	1.97	1/4X1/8
	B11	5.13	4.74	6.37	6.15	1.375	4.25	4.81	2.875	6.44	11.63	12.19	2.50	3.31	1.97	5/16X5/32

Size	Main Dimensions					Output Flange				
	U	V	W	X	Y	Z	ZZ	AB	AC	AD
1	0.12	0.406	1.95	3.25	0.16	3/8 - 16	Thru	6.5	5.875	4.5
2	0.12	0.406	3.00	3.25	0.16	3/8 - 16	0.75	6.5	5.875	4.5
3	0.16	0.500	3.35	4.50	0.31	1/2 - 13	Thru	- -	7.250	8.5

Size	Input Flange	Input Flange							
		AJ	AK	BD	BF	BB	FF	FT	TT
1	B5	5.875	4.5	6.5	0.43	0.16	0.625	0.35	3/16x3/32
2	B5	5.875	4.5	6.5	0.41	0.16	0.625	0.43	3/16x3/32
	B7	5.875	4.5	6.5	0.41	0.16	0.875	0.43	3/16x3/32
3	B9	7.250	8.5	9.0	0.59	0.24	1.125	0.59	1/4x1/8
	B11	7.250	8.5	9.0	0.59	0.24	1.375	0.59	5/16x5/32

Notes



Hollow Shaft



Section Contents

Product Reference Guide 248

Numbering System / How To Order 249

Selection Procedure 250-251

Mounting Positions 252

Output RPM Selection Tables 253-256

Reducer Ratings 257-258

Dimensions 259-263

Accessories 264-265

Washdown Duty 266

Lubrication 267-268

Parts List 269

J

F200 Series Optimount® Helical Gear Flanged Reducers

Ordering Information – Pages 249-251
Selection/Rating Information – Pages 253-256
Lubrication – Pages 267-268
Motor Selection – Pages 340, 343-347



Basic Model
Dimensions – Page 259



F200H Series
Horizontal Base Model
Dimensions – Page 260



F200V Series
Vertical Base Model
Dimensions – Page 260

200 Series Optimount® Helical Gear Non-Flanged Reducers

Ordering Information – Pages 249-251
Selection/Rating Information – Pages 253-256
Lubrication – Pages 267-268
Motor Selection – Pages 340, 343-347



Basic Model
Dimensions – Pages 261



200H Series
Horizontal Base Model
Dimensions – Page 262



200V Series
Vertical Base Model
Dimensions – Page 262

200 Series Optimount® Helical Gear Accessories and Options

Ordering Information – Page 249



Shaft Kits / Reaction Rods
Dimensions – Pages 264



Base Kits
Vertical/Horizontal
Dimensions – Page 265

J

Catalog Numbering System

When ordering please note the complete catalog number and/or the (5-digit) item code. With either of these two numbers your local Boston Distributor will have several alternatives to enter your order into the Boston Gear system.

200 Series Catalog Number

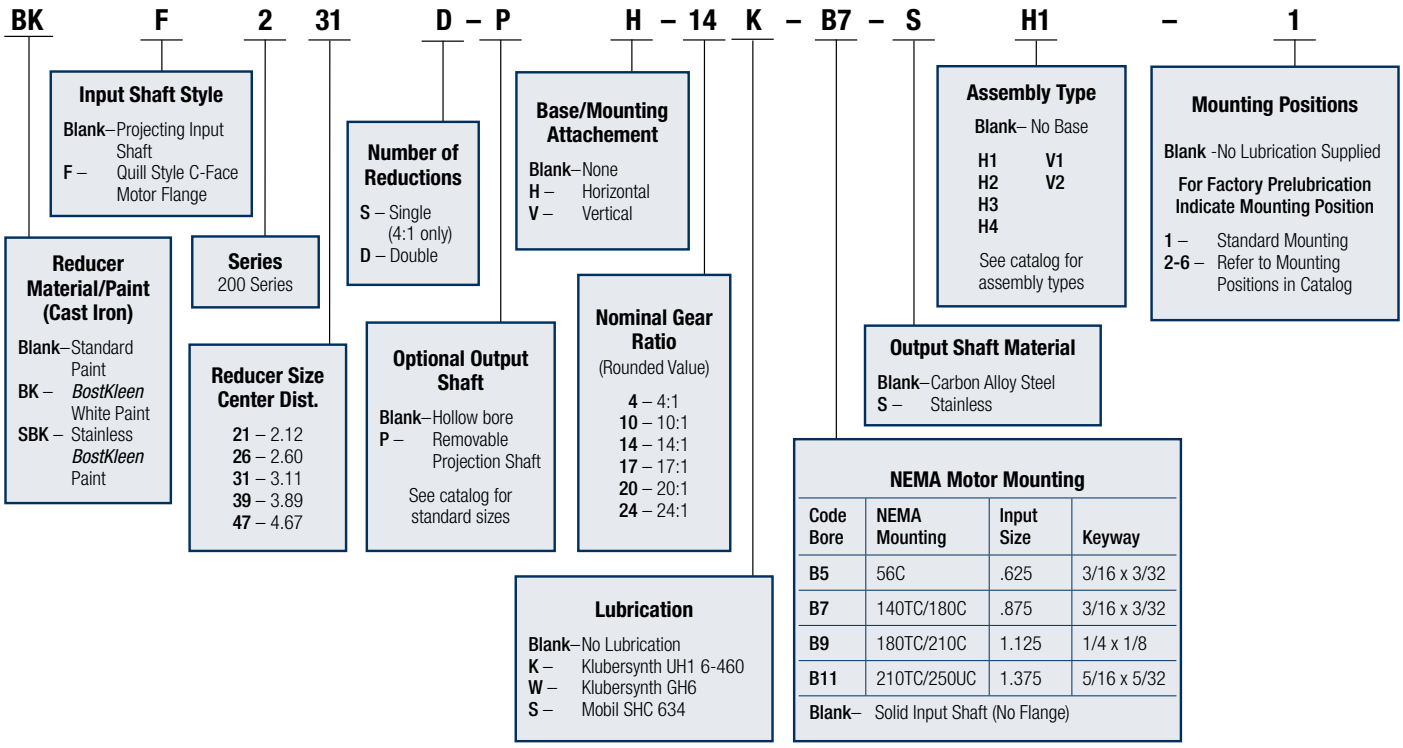

How to Order

Specify Model Number (Basic Hollow Output Shaft Reducer), Ratio, Input Bore Code, Horizontal or Vertical Base Kit and Output Shaft Kit.

EXAMPLE:

F239DPH-14-B9**

Order:
1 Pc. F239D-14-B9 (Basic Flanged Reducer) (39272)

1 Pc. X239-3PK (Output Shaft Kit) (23904)

1 Pc. X239-11HK (Horizontal Base Kit) (68658)

*Shipped separately unless otherwise specified.

If components are to be factory assembled, specify Assembly Type and Mounting Position, see Page 240

J

200 Series Optimount® Helical Gear Speed Reducers

To properly select a speed reducer, the following application information should be known.

1. Service Factor or AGMA Service Class.
2. Output Horsepower or Torque
3. Output RPM or Ratio

Non-Motorized Speed Reducer

1. Determine application service factor from table 1 or from application classification tables on pages 354-355.
2. Determine design Horsepower or Torque.
   – Design HP = Application HP x S.F.
   – Design Torque = Application Torque x S.F.
3. Select a Speed reducer that satisfies output RPM, service class and/or output torque requirement. Ref. rating tables pages 257-258.
4. Overhung shaft load should be checked when belt or chain drives are used, to prevent premature shaft or bearing failure. Reference page 251 for calculations.

Example

Select a parallel shaft helical speed reducer for a uniformly loaded assembly belt conveyor to operate 12 hrs/day, to be driven at 1150 RPM input. Output RPM Approx. 80, Torque requirement is 2200 lb-in.

1. Application Service Factor = 1.25
2. Design Torque = 2200 x 1.25
   = 2750 LB-IN.
3. Select at speed and torque level of at least 2750 LB-IN or greater
4. Order 239D-14
   (Item Code 39052)

NOTE: The use of an auxiliary drive between the speed reducer and the driven machine reduces the torque required at the output shaft in direct proportion to the auxiliary drive ratio.

A 3:1 chain ratio would reduce the torque requirement at the output shaft of the reducer to one-third, resulting in a smaller unit size selection.

Service Factor Table

AGMA CLASS OF SERVICE	SERVICE FACTOR	OPERATING CONDITIONS
I	1.00	Moderate Shock-not more than 15 minutes in 2 hours. Uniform Load-not more than 10 hours per day.
II	1.25	Moderate Shock-not more than 10 hours per day. Uniform Load-more than 10 hours per day.
	1.50	Heavy Shock-not more than 15 minutes in 2 hours. Moderate Shock-more than 10 hours per day.
III	1.75 2.00	Heavy Shock-not more than 10 hours per day. Heavy Shock-more than 10 hours per day.

For complete AGMA Service Factors and Load Classifications, see Engineering Pages 354-355.

200 Series Ratio and Capacity Selection Tables

(Service Factor 1.0)

Catalog Number	Item Code	INPUT RPM								Gear Ratio	O.H.L. (LB.)*	Weight (Lb.)
		1750				1150						
		O/P RPM	Output Torque (LB-IN)	HP		O/P RPM	Output Torque (LB-IN)	HP				
				Input	Output			Input	Output			
221D-14	39004		403	0.80	0.77		403	0.53	0.51		490	23
226D-14	39020		711	1.43	1.37		772	1.02	0.97		660	38
231D-14	39036	121	1500	3.00	2.88	80	1781	2.34	2.25	14.45	780	57
239D-14	39052		2842	5.69	5.46		3168	4.17	4.00		875	96
247D-14	39068		4736	9.48	9.10		5662	7.45	7.15		1070	140
221D-17	39006		410	0.69	0.66		410	0.45	0.43		500	23
226D-17	39022		754	1.26	1.21		805	0.89	0.85		675	38
231D-17	39038	101	1644	2.75	2.64	67	1857	2.04	1.96	17.28	800	57
239D-17	39054		2959	5.00	4.80		3219	3.54	3.40		900	96
247D-17	39070		5071	8.49	8.15		5775	6.34	6.10		1100	135

Ref. Page 257

Motorized Speed Reducer

1. Determine application service factor from the table on page 250 or from pages 354-355.
2. Determine output speed required.
3. Determine HP or output torque requirement.
4. Select based on output speed and horsepower requirement for given service class.
5. Check overhung load Ref. calculation.

Example

Select a Parallel Shaft Helical Gear Flanged Speed Reducer and motor to drive a uniformly loaded line shaft 12 hours/day, requiring approximately 1 1/2 HP at 100 RPM.

Power Requirement
230/460 volt
3 phase
60 Hz

1. Select service factor class from pages 354-355 or from Table 1.
   Service class = II
2. Output RPM = 100
3. 1 1/2 HP
4. Select a 1 1/2 HP drive that will satisfy service class II.
5. O.H.L = 800 LBS. Ref. pg. 257
6. Order: 1 – F231D-17-B7 (39250)
   1 – JUTF Motor Ref. page 345 for specific manufacturer.

Overhung Load

If the output shaft of a speed reducer is connected to the driven machine by other than a flexible coupling, an overhung load is imposed on the shaft. This load may be calculated as follows:

$$OHL = \frac{2\,TK}{D}$$

OHL = Overhung Load (LB.)
T = Shaft Torque (LB.-INS.)
D = PD of Sprocket, Pinion or Pulley (IN.)
K = Load Connection Factor

Load Connection Factor (K)

Sprocket or Timing Belt 1.00
Pinion and Gear Drive 1.25
Pulley and V-Belt Drive. 1.50
Pulley and Flat Belt Drive 2.50

An overhung load greater than permissible load value may be reduced to an acceptable value by the use of a sprocket, pinion or pulley of a larger PD. Relocation of the load closer to the center of reducer will also increase OHL capacity.

Permissible Overhung Loads and Output Shaft Thrust Loads are listed for each reducer in the Tables on Pages 257-258.

200 Series Output RPM and Capacity Selection Tables

@ 1750 RPM Input

Output RPM	Ratio	Non-Flanged Reducers: Gear Capacity: Output Torque (LB-IN.)	Non-Flanged Reducers: Gear Capacity: HP: Input	Non-Flanged Reducers: Gear Capacity: HP: Output	Non-Flanged Reducers: Catalog Number	Non-Flanged Reducers: Item Code	Flanged Reducers (Gearmotors): Ratings: Motor HP	Ratings: Output Torque (LB-IN.)	Ratings: Service Class	Flanged Reducers: Catalog Number	Flanged Reducers: Item Code	AC Motors†	DC Motors††
101 (Cont.)	17.28	1644	2.75	2.64	231D-17	39038	3	*1644	*	F231D-17-B9	47227	LUTF	PM18300
							2 1 1/2	1194 896	I II	F231D-17-B7	39250	KUTF JUTF	PM18200 PM18150
							1	597	III	F231D-17-B5	39246	HUTF-5/8	PM9100 5/8 PM18100 5/8
		2959	4.96	4.76	239D-17	39054	5 3	*2956 1498	* II	F239D-17-B9	39276	MUTF LUTF	PM18500 PM18300
							2	1194	III	F239D-17-B7	39274	KUTF	PM18200
							7 1/2	4478	I	F247D-17-B11	47233	NUTF	—

Reference Page 255

J

200 Series Optimount® Mounting Positions

200 SERIES—HORIZONTAL BASE

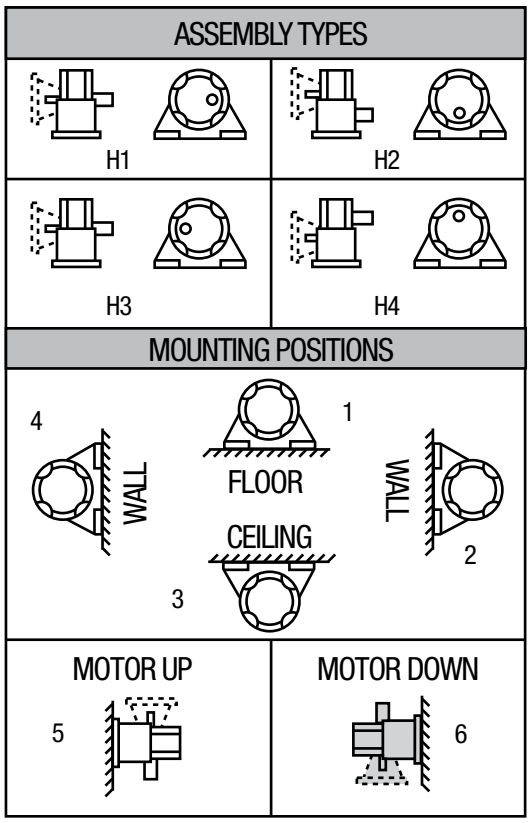

NOTE: Shaded positions are not recommended when used as a motorized reducer and should be avoided if possible.

Mountings are designated by combining identification for assembly type and mounting position (Example Mtg. H1).

Mounting H1 is standard and will be furnished unless otherwise specified.

SIZES 221 TO 247

All other assemblies are available at no additional charge. The assembly types shown indicate the four possible arrangements of the Reductor in the base.

Any of these assemblies may be installed in the various floor sidewall or ceiling mounting positions shown by relocating oil plugs in proper positions. *Reference pages 267-268.*

CAUTION

Mounting of speed reducers in overhead positions may be hazardous. Use of external guides or supports is strongly recommended for overhead mounting.

200 SERIES—VERTICAL BASE

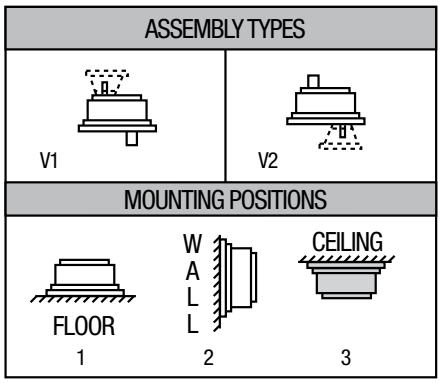

Mountings are designated by combining identification for assembly type and mounting position (Example Mtg. V1).

Mounting V1 is standard and will be furnished unless otherwise specified. All other mountings are available at no additional charge.

SIZES 221 TO 247

Assemblies V1 & V2 may be installed in the various floor, side-wall or ceiling mounting positions shown.

Sidewall Mounted Reducers must be located with one edge of the base parallel to the floor so that oil plugs can be properly located.

Mounting designations other than standard must be included with each Reductor order.

200 SERIES

SHAFT MOUNTING

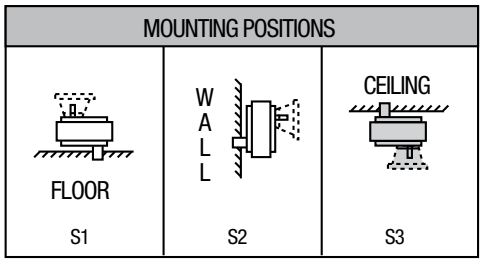

Mounting S2 is standard and will be furnished unless otherwise specified. Mountings S1 & S3 are available at a slight additional charge.

SIZES 221 TO 247

Shaft Mounted Reductors may be installed in floor, sidewall or ceiling mounting positions by proper relocation of oil plugs. Reference to pages *267-268*.

J

@ 1750 RPM Input

FOR RATINGS AT OTHER INPUT SPEEDS, SEE TABLES ON PAGES 257-258
ORDER BY CATALOG NUMBER OR ITEM CODE

Output RPM	Ratio	Non-Flanged Reducers					Flanged Reducers (Gearmotors)					AC Motors†	DC Motors††
		Gear Capacity			Catalog Number	Item Code	Ratings			Catalog Number	Item Code		
		Output Torque (LB-IN.)	HP Input	HP Output			Motor HP	Output Torque (LB-IN.)	Service Class				
431	4.06	289	2.02	1.98	221S-4	39012	1	142	III	F221S-4-B5	39214	HUTF-5/8	PM9100 5/8 PM18100 5/8
							3/4	106	III			GUTF	PM975
		455	3.17	3.11	226S-4	39028	2	284	II	F226S-4-B7	39236	KUTF	PM18200
							1 1/2	213	III			JUTF	PM18150
		950	6.63	6.50	231S-4	39044	5	716	I	F231S-4-B9	39264	MUTF	PM18500
							3	423	III			LUTF	PM18300
		1900	13.26	12.99	239S-4	39060	10	1432	I	F239S-4-B11	39290	PUTF	—
							7 1/2	1074	II			NUTF	—
							5	716	III	F239S-4-B9	39288	MUTF	PM18500
		2851	19.90	19.50	247S-4	39076	10	1432	II	F247S-4-B11	39308	PUTF	—
							7 1/2	1074	III			NUTF	—
178	9.84	390	1.15	1.10	221D-10	39002	1	340	I	F221D-10-B5	39202	HUTF-5/8	PM9100 5/8 PM18100 5/8
							3/4	255	II			GUTF	PM975
							1/2	170	III			FUTF	PM950
		672	2.00	1.90	226D-10	39018	2	660	I	F226D-10-B7	39220	KUTF	PM18200
							1 1/2	510	I			JUTF	PM18150
							1	340	II	F226D-10-B5	39218	HUTF-5/8	PM9100 5/8 PM18100 5/8
							3/4	255	III			GUTF	PM975 PM1875
		1322	3.89	3.73	231D-10	39034	3	1020	I	F231D-10-B9	39242	LUTF	PM18300
							2	680	II	F231D-10-B7	39240	KUTF	PM18200
							1 1/2	510	III			JUTF	PM18150
		2426	7.12	6.84	239D-10	39050	5	1700	I	F239D-10-B9	39268	MUTF	PM18500
							3	1020	III			LUTF	PM18300

Class I (S.F. = 1.00) Class II (S.F. = 1.50) Class III (S.F. = 2.00)
† AC Motors – 230/460-3-60 TEFC, for specific motor manufacturers and 5 digit item code refer to pages 343-345.
††DC Motors – 90 VDC or 180 VDC where applicable, for specific motor manufacturers and 5 digit item code ref. pages 346 and 347.

J

200 Series Output RPM and Capacity Selection Tables

@ 1750 RPM Input

FOR RATINGS AT OTHER INPUT SPEEDS, SEE TABLES ON PAGES 245-246
ORDER BY CATALOG NUMBER OR ITEM CODE

Output RPM	Ratio	Non-Flanged Reducers					Flanged Reducers (Gearmotors)					AC Motors†	DC Motors††
		Gear Capacity			Catalog Number	Item Code	Ratings			Catalog Number	Item Code		
		Output Torque (LB-IN.)	HP Input	HP Output			Motor HP	Output Torque (LB-IN.)	Service Class				
178 (Cont.)	9.84	4641	13.64	13.09	247D-10	39066	10 7 1/2	3400 2550	I II	F247D-10-B11	39296	PUTF NUTF	— —
							5	1700	III	F247D-10-B9	39294	MUTF	PM18500
121	14.45	403	.80	.77	221D-14	39004	3/4 1/2 1/3	374 250 166	I II III	F221D-14-B5	39204	GUTF FUTF EUTF	PM975 PM950 PM933
		711	1.43	1.37	226D-14	39020	1 1/2	*711	*	F226D-14-B7	39224	JUTF	PM18150
							1 3/4 1/2	500 374 250	I II III	F226D-14-B5	39222	HUTF-5/8 GUTF FUTF	PM9100 5/8 PM18100 5/8 PM975 PM950
		1500	3.00	2.88	231D-14	39036	3	1500	I	F231D-14-B9	47226	LUTF	PM18300
							2 1 1/2	998 750	II III	F231D-14-B7	39248	KUTF JUTF	PM18200 PM18150
							1	500	III	F231D-14-B5	39244	HUTF-5/8	PM9100 5/8 PM18100 5/8
		2842	5.69	5.46	239D-14	39052	5 3	2497 1498	I II	F239D-14-B9	39272	MUTF LUTF	PM18500 PM18300
							2	998	III	F239D-14-B7	39270	KUTF	PM18200
		4736	9.48	9.10	247D-14	39068	10 7 1/2 5	*4736 3745 2497	* I II	F247D-14-B11	47232	PUTF NUTF MUTF	— — PM18500
							3	1498	III	F247D-14-B9	39298	LUTF	PM18300
101	17.28	410	.69	.66	221D-17	39006	3/4 1/2 1/3	*410 298 199	* I III	F221D-17-B5	39206	GUTF FUTF EUTF	PM975 PM950 PM933
		754	1.26	1.21	226D-17	39022	1 1/2	*754	*	F226D-17-B7	47220	JUTF	PM18150
							1 3/4 1/2	597 448 298	I II III	F226D-17-B5	39226	HUTF-5/8 GUTF FUTF	PM9100 5/8 PM18100 5/8 PM975 PM950

Class I (S.F. = 1.00) Class II (S.F. = 1.50) Class III (S.F. = 2.00)
† AC Motors – 230/460-3-60 TEFC, for specific motor manufacturers and 5 digit item code refer to pages 343-345.
††DC Motors – 90 VDC or 180 VDC where applicable, for specific motor manufacturers and 5 digit item code ref. pages 346 and 347.
*Rating Limited to Gear Capacity.

J

@ 1750 RPM Input

FOR RATINGS AT OTHER INPUT SPEEDS, SEE TABLES ON PAGES 245-246
ORDER BY CATALOG NUMBER OR ITEM CODE

Output RPM	Ratio	Non-Flanged Reducers					Flanged Reducers (Gearmotors)					AC Motors†	DC Motors††
		Gear Capacity			Catalog Number	Item Code	Ratings			Catalog Number	Item Code		
		Output Torque (LB-IN.)	HP Input	HP Output			Motor HP	Output Torque (LB-IN.)	Service Class				
101 (Cont.)	17.28	1644	2.75	2.64	231D-17	39038	3	*1644	*	F231D-17-B9	47227	LUTF	PM18300
							2 1 1/2	1194 896	I II	F231D-17-B7	39250	KUTF JUTF	PM18200 PM18150
							1	597	III	F231D-17-B5	39246	HUTF-5/8	PM9100 5/8 PM18100 5/8
		2959	4.96	4.76	239D-17	39054	5 3	*2956 1498	* II	F239D-17-B9	39276	MUTF LUTF	PM18500 PM18300
							2	1194	III	F239D-17-B7	39274	KUTF	PM18200
		5071	8.49	8.15	247D-17	39070	7 1/2	4478	I	F247D-17-B11	47233	NUTF	—
							5 3	2986 1791	II III	F247D-17-B9	39300	MUTF LUTF	PM18500 PM18300
87.4	20.03	398	.57	.55	221D-20	39008	1/2 1/3 1/4	346 230 173	I II III	F221D-20-B5	39208	FUTF EUTF DUTF	PM950 PM933 PM925
		758	1.09	1.05	226D-20	39024	1 3/4 1/2	692 519 346	I II III	F226D-20-B5	39228	HUTF-5/8 GUTF FUTF	PM9100 5/8 PM18100 5/8 PM975 PM950
		1679	2.43	2.33	231D-20	39040	3	*1679	*	F231D-20-B9	47228	LUTF	PM18300
							2 1 1/2	1384 1038	I II	F231D-20-B7	39254	KUTF JUTF	PM18200 PM18150
							1	692	III	F231D-20-B5	39252	HUTF-5/8	PM9100 5/8 PM18100 5/8
		3022	4.36	4.19	239D-20	39056	5 3	*3022 2076	* I	F239D-20-B9	39280	MUTF LUTF	PM18500 PM18300
							2	1384	III	F239D-20-B7	39278	KUTF	PM18200
		5198	7.51	7.21	247D-20	39072	7 1/2	5192	I	F247D-20-B11	47234	NUTF	—
							5 3	3461 2076	II III	F247D-20-B9	39302	MUTF LUTF	PM18500 PM18300

Class I (S.F. = 1.00) Class II (S.F. = 1.50) Class III (S.F. = 2.00)
† AC Motors – 230/460-3-60 TEFC, for specific motor manufacturers and 5 digit item code refer to pages 343-345.
††DC Motors – 90 VDC or 180 VDC where applicable, for specific motor manufacturers and 5 digit item code ref. pages 346 and 347.
*Rating Limited to Gear Capacity.

J

200 Series Output RPM and Capacity Selection Tables

@ 1750 RPM Input

FOR RATINGS AT OTHER INPUT SPEEDS, SEE TABLES ON PAGES 245-246
ORDER BY CATALOG NUMBER OR ITEM CODE

Output RPM	Ratio	Non-Flanged Reducers					Flanged Reducers (Gearmotors)					AC Motors†	DC Motors††
		Gear Capacity			Catalog Number	Item Code	Ratings			Catalog Number	Item Code		
		Output Torque (LB-IN.)	HP				Motor HP	Output Torque (LB-IN.)	Service Class				
			Input	Output									
73	23.95	414	.50	.48	221D-24	39010	1/2	414	I	F221D-24-B5	39210	FUTF	PM950
							1/3	275	I			EUTF	PM933
							1/4	206	III			DUTF	PM925
		809	.98	.94	226D-24	39026	1	809	I	F226D-24-B5	39230	HUTF-5/8	PM9100 5/8 PM18100 5/8
							3/4	620	II			GUTF	PM975
							1/2	414	III			FUTF	PM950
		1791	2.17	2.08	231D-24	39042	2	1655	I	F231D-24-B7	39258	KUTF	PM18200
							1 1/2	1242	II			JUTF	PM18150
							1	828	III	F231D-24-B5	39256	HUTF-5/8	PM9100 5/8 PM18100 5/8
		3175	3.83	3.68	239D-24	39058	5	*3175	*	F239D-24-B9	39284	MUTF	PM18500
							3	2483	I			LUTF	PM18300
							2	1655	II	F239D-24-B7	39282	KUTF	PM18200
							1 1/2	1241	III			JUTF	PM18150
		5478	6.61	6.35	247D-24	39074	7 1/2	*5478	*	F247D-24-B11	47235	NUTF	—
							5	4138	I	F247D-24-B9	39304	MUTF	PM18500
							3	2483	III			LUTF	PM18300

Class I (S.F. = 1.00) Class II (S.F. = 1.50) Class III (S.F. = 2.00)
† AC Motors – 230/460-3-60 TEFC, for specific motor manufacturers and 5 digit item code refer to pages 343-345.
††DC Motors – 90 VDC or 180 VDC where applicable, for specific motor manufacturers and 5 digit item code ref. pages 346 and 347.
* Rating Limited to Gear Capacity.

J

Non-Flanged Reducers; Input Speeds 1750 and 1150 RPM

Service Factor 1.0

ORDER BY CATALOG NUMBER OR ITEM CODE

Catalog Number	Item Code	INPUT RPM								Gear Ratio	O.H.L. (LB.)*	Weight (Lb.)
		1750				1150						
		O/P RPM	Output Torque (LB-IN)	HP		O/P RPM	Output Torque (LB-IN)	HP				
				Input	Output			Input	Output			
221S-4	39012		289	2.02	1.98		300	1.38	1.35		350	25
226S-4	39028		455	3.17	3.11		552	2.53	2.48		475	40
231S-4	39044	431	959	6.63	6.56	283	1144	5.24	5.14	4.06	575	58
239S-4	39060		1900	13.26	12.99		2545	11.67	11.44		650	96
247S-4	39076		2851	19.90	19.50		3557	16.32	15.99		800	137
221D-10	39002		390	1.15	1.10		404	0.78	0.75		460	23
226D-10	39018		672	2.90	1.90		723	1.40	1.34		615	38
231D-10	39034	178	1322	3.89	3.73	117	1581	3.05	2.93	9.84	720	60
239D-10	39050		2426	7.12	6.85		2860	5.52	5.30		800	99
247D-10	39066		4641	13.64	13.10		5071	9.79	9.40		980	140
221D-14	39004		403	0.80	0.77		403	0.53	0.51		490	23
226D-14	39020		711	1.43	1.37		772	1.02	0.97		660	38
231D-14	39036	121	1500	3.00	2.88	80	1781	2.34	2.25	14.45	780	57
239D-14	39052		2842	5.69	5.46		3168	4.17	4.00		875	96
247D-14	39068		4736	9.48	9.10		5662	7.45	7.15		1070	140
221D-17	39006		410	0.69	0.66		410	0.45	0.43		500	23
226D-17	39022		754	1.26	1.21		805	0.89	0.85		675	38
231D-17	39038	101	1644	2.75	2.64	67	1857	2.04	1.96	17.28	800	57
239D-17	39054		2959	5.00	4.80		3219	3.54	3.40		900	96
247D-17	39070		5071	8.49	8.15		5775	6.34	6.10		1100	135
221D-20	39008		398	0.57	0.55		411	0.39	0.37		510	23
226D-20	39024		758	1.09	1.05		838	0.79	0.76		695	38
231D-20	39040	87	1679	2.43	2.33	57	1916	1.81	1.75	20.03	825	57
239D-20	39056		3022	4.36	4.19		3299	3.12	3.01		925	96
247D-20	39072		5198	7.51	7.21		5862	5.56	5.34		1125	135
221D-24	39010		414	0.50	0.48		404	0.31	0.31		525	23
226D-24	39026		809	0.98	0.94		819	0.65	0.62		715	38
231D-24	39042	73	1791	2.17	2.08	48	1886	1.50	1.44	23.95	850	57
239D-24	39058		3175	3.83	3.68		3353	2.66	2.55		950	96
247D-24	39074		5478	6.61	6.35		5760	4.57	4.39		1150	135

* Overhung Load (O.H.L.) in (LB's) is at center of Output Shaft Extension and with no Thrust Load.

Size	Shaft Dia. (Ins.)	Input Shaft		Output Shaft
		Allowable Overhung Load in Lbs. (No Thrust) at 1 and 2 Shaft diameters from Oil Seal		Allowable Thrust Load In Lbs. (No Overhung Load)
		1	2	
221	1/2	80	60	700
226	5/8	100	80	1000
231	15/16	160	120	1100
239	1-3/8	325	225	1200
247	1-9/16	400	300	1300

J

Non-Flanged Reducers; Input Speeds 690 and 100 RPM

Service Factor 1.0

ORDER BY CATALOG NUMBER OR ITEM CODE

Catalog Number	Item Code	INPUT RPM								Gear Ratio	O.H.L. (LB.)*	Weight (Lb.)
		690				100						
		O/P RPM	Output Torque (LB-IN)	HP		O/P RPM	Output Torque (LB-IN)	HP				
				Input	Output			Input	Output			
221S-4	39012		313	.86	0.84		343	0.14	0.13		465	25
226S-4	39028		624	1.71	1.68		682	0.28	0.27		620	40
231S-4	39044	170	1275	3.51	3.44	25	1417	0.56	0.55	4.06	730	58
239S-4	39060		2795	7.69	7.54		3113	1.24	1.22		810	96
247S-4	39076		4045	11.14	10.91		4670	1.86	1.83		995	137
221D-10	39002		405	.47	0.45		426	0.07	0.07		530	23
226D-10	39018		798	.93	0.89		985	0.17	0.16		720	38
231D-10	39034	70	1834	2.12	2.04	10	2140	0.36	0.35	9.84	860	60
239D-10	39050		3202	3.71	3.56		3624	0.61	0.58		860	99
247D-10	39066		5605	6.49	6.24		6012	1.01	0.97		1160	140
221D-14	39004		413	.32	0.31		431	0.50	0.05		550	23
226D-14	39020		821	.65	0.62		1051	0.13	0.12		750	38
231D-14	39036	48	1898	1.50	1.44	7	2148	0.25	0.24	14.45	900	57
239D-14	39052		3360	2.66	2.55		3780	0.43	0.42		1000	96
247D-14	39068		5868	4.64	4.45		6060	0.69	0.67		1200	140
221D-17	39006		403	.27	0.26		432	0.04	0.04		550	23
226D-17	39022		834	.56	0.53		1068	0.10	0.10		750	38
231D-17	39038	40	1986	1.30	1.26	6	2153	0.21	0.20	17.28	900	57
239D-17	39054		3421	2.26	2.17		3790	0.36	0.35		1000	96
247D-17	39070		5904	3.90	3.74		6076	0.58	0.56		1200	135
221D-20	39008		406	.23	0.22		434	0.03	0.03		550	23
226D-20	39024		878	.50	0.48		1072	0.09	0.08		750	38
231D-20	39040	34	2005	1.14	1.10	5	2158	0.18	0.17	20.03	900	57
239D-20	39056		3446	1.96	1.88		3800	0.31	0.30		1000	96
247D-20	39072		5958	3.39	3.26		6094	0.50	0.48		1200	135
221D-24	39010		409	.20	0.19		436	0.03	0.03		550	23
226D-24	39026		893	.43	0.41		1080	0.08	0.07		750	38
231D-24	39042	29	2046	.97	0.94	4	2162	0.15	0.14	23.95	900	57
239D-24	39058		3492	1.67	1.60		3811	0.26	0.25		1000	96
247D-24	39074		5988	2.85	2.74		6109	0.43	0.40		1200	135

* Overhung Load (O.H.L.) in (LB's) is at center of Output Shaft Extension and with no Thrust Load.

Size	Shaft Dia. (Ins.)	Input Shaft		Output Shaft
		Allowable Overhung Load in Lbs. (No Thrust) at 1 and 2 Shaft diameters from Oil Seal		Allowable Thrust Load In Lbs. (No Overhung Load)
		1	2	
221	1/2	80	60	700
226	5/8	100	80	1000
231	15/16	160	120	1100
239	1-3/8	325	225	1200
247	1-9/16	400	300	1300

J

F200 Series; F221-247 Sizes

Hollow Shaft

For ordering information See Page 249.

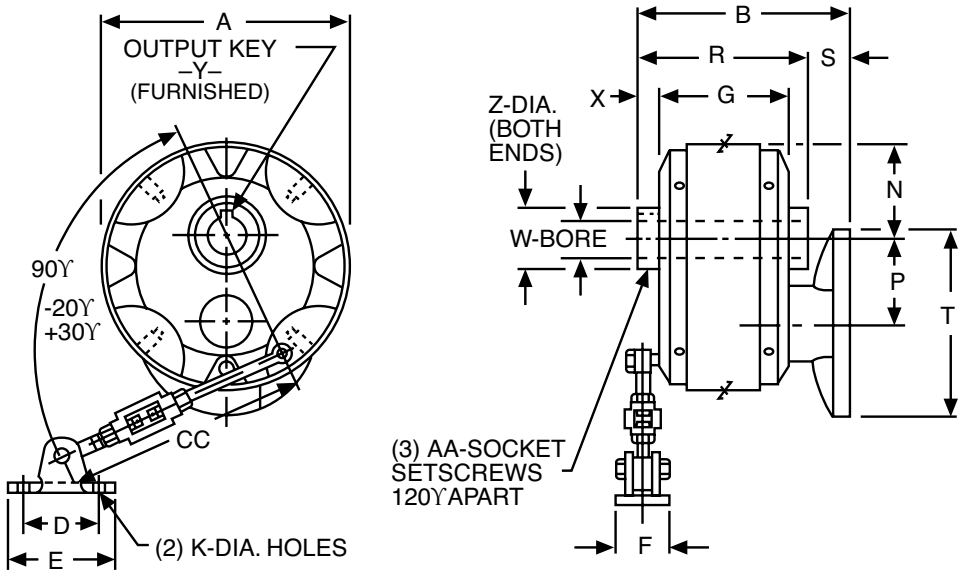

ALL DIMENSIONS IN INCHES

Size	A	B NEMA Mounting 56C 140TC	B NEMA Mounting 180TC	B NEMA Mounting 210TC	D	E	F	G	K	N	P	R	S NEMA Mounting 56C 140TC	S NEMA Mounting 180TC	S NEMA Mounting 210TC
221	6.19	6.13	–	–	2.25	3.31	1.06	3.31	.41	2.19	2.12	4.31	1.81	—	—
226	7.50	6.69	–	–	2.25	3.31	1.06	4.06	.41	2.81	2.60	5.19	1.50	—	—
231	8.88	7.19	8.06	–	2.63	3.69	1.06	4.75	.41	3.44	3.11	5.88	1.31	2.19	—
239	11.19	7.94	9.06	9.06	2.63	3.69	1.06	5.44	.41	4.03	3.89	6.69	1.25	2.38	2.38
247	12.88	–	9.56	10.31	3.00	4.31	1.31	5.94	.94	4.88	4.67	7.31	—	2.25	3.00

Size	T NEMA Mounting 56C 140TC	T NEMA Mounting 180TC	T NEMA Mounting 210TC	Output W +.001 –.000	Output X	Output Y Sq.	Output Y LGTH.	Z	AA	CC	Optional Reaction Rod Kit Item Catalog #	Optional Reaction Rod Kit Code
221	6.56	—	—	1.0000	.50	1/4 x 7/32	1-3/8	1.3750	10-32	18-12	X221-76K	24188
226	6.56	—	—	1.2500	.56	1/4 x 7/32	1-1/2	1.7702	1/4-28	30-24	X226-76K	24190
231	6.56	9.25	—	1.4375	.56	3/8 x 5/16	1-3/4	2.1638	1/4-28	30-24	X231-76K	24192
239	6.56	9.25	10.13	1.9375	.63	1/2 x 3/8	2	2.5575	5/16-24	30-24	X239-76K	24194
247	—	9.25	10.13	2.1875	.69	1/2 x 3/8	2-1/4	2.9512	3/8-24	30-24	X247-76K	24196

Refer to Page 264 for Shaft Kit and for Reaction Rod Kit.
Note: For external reference surfaces, refer to page 265.

J

F200 Series; Horizontal Base Projecting Shaft

For ordering information See Page 249.

Parallel Shafts

ASSEMBLY TYPES*

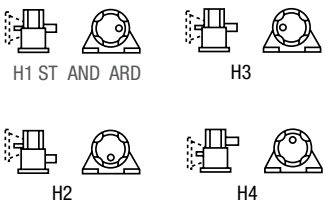

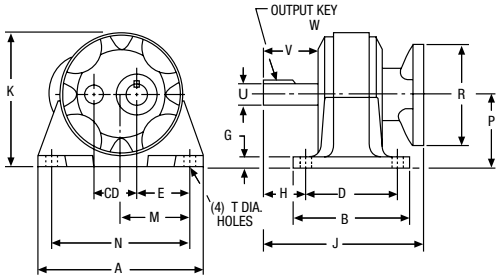

ALL DIMENSIONS IN INCHES

NEMA Mounting	Input Bore +.0015 -.0000	Input Keyway
56C	.625	3/16 × 3/32
140TC	.875	3/16 × 3/32
180TC	1.125	1/4 × 1/8
210TC	1.375	5/16 × 5/32

Size	C.D.	A	B	D	E	G	H	J NEMA Mounting 56C	J NEMA Mounting 140TC	J NEMA Mounting 180TC	J NEMA Mounting 210TC	K	M	N
221	2.12	8.75	6.00	4.75	2.72	.50	2.16	8.50	—	—	—	6.84	3.63	7.25
226	2.60	11.00	7.38	5.75	3.56	.63	2.59	9.56	9.56	—	—	8.38	4.50	9.00
231	3.11	12.50	8.50	6.75	4.13	.75	2.72	10.34	10.84	11.22	—	9.88	5.13	10.25
239	3.89	15.50	9.75	7.75	4.94	.88	3.38	—	11.84	12.97	12.97	12.34	6.50	13.00
247	4.67	17.50	10.75	8.50	5.94	1.00	3.81	—	13.97	13.53	14.72	14.19	7.50	15.00

Size	P	R NEMA Mounting 56C	R NEMA Mounting 140TC	R NEMA Mounting 180TC	R NEMA Mounting 210TC	T Holes	Low Speed Shaft U +.000 –.001	Low Speed Shaft V	Low Speed Shaft W-Key Sq.	Low Speed Shaft W-Key LENGTH	Approx. Weight (Lbs.)	Optional Base Kit No. (Ref. Pg 249)	Optional Output Shaft Kit (Ref. Pg 248)
221	3.75	6.56	—	—	—	13/32	1.0000	2.25	1/4	1-1/4	28	X221-11HK	X221-3PK
226	4.62	6.56	6.56	—	—	15/32	1.2500	2.75	1/4	1-5/8	43	X226-11HK	X226-3PK
231	5.44	6.56	6.56	9.25	—	17/32	1.3750	3.00	5/16	1-3/4	69	X231-11HK	X231-3PK
239	6.75	—	6.96	9.25	10.13	19/32	1.8750	3.75	1/2	2	124	X239-11HK	X239-3PK
247	7.75	—	9.25	10.13	10.13	21/32	2.1250	4.25	1/2	2-1/2	166	X247-11HK	X247-3PK

F200 Series; Vertical Base Projecting Shaft

Parallel Shafts

ASSEMBLY TYPES*



V1 STANDARD



V2

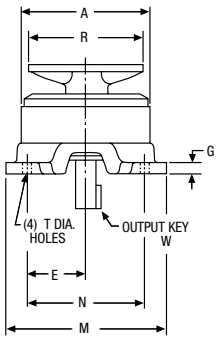

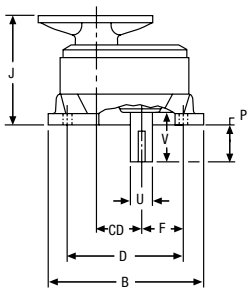

ALL DIMENSIONS IN INCHES

NEMA Mounting	Input Bore +.0015 -.0000	Input Keyway
56C	.625	3/16 × 3/32
140TC	.875	3/16 × 3/32
180TC	1.125	1/4 × 1/8
210TC	1.375	5/16 × 5/32

Size	C.D.	A	B	D	E	F	G	J NEMA Mounting 56C	J NEMA Mounting 140TC	J NEMA Mounting 180TC	J NEMA Mounting 210TC	M	N
221	2.12	6.19	8.00	5.75	2.88	1.97	.50	6.53	—	—	—	8.25	5.75
226	2.60	7.50	9.63	7.00	3.50	2.56	.63	7.13	7.13	—	—	9.88	7.00
231	3.11	8.88	11.00	8.25	4.13	3.13	.75	7.69	8.19	8.88	—	11.25	8.25
239	3.89	11.19	13.63	10.25	5.13	3.56	.88	—	8.75	9.88	9.88	13.88	10.25
247	4.67	12.88	15.50	11.75	5.88	4.31	1.00	—	—	10.31	9.88	16.00	11.75

Size	P	R NEMA Mounting 56C	R NEMA Mounting 140TC	R NEMA Mounting 180TC	R NEMA Mounting 210TC	T Holes	Low Speed Shaft U +.000 –.001	Low Speed Shaft V	Low Speed Shaft W-Key Sq.	Low Speed Shaft W-Key LENGTH	Approx. Weight (Lbs.)	Optional Base Kit No. (Ref. Pg 249)	Optional Output Shaft Kit (Ref. Pg 248)
221	1.97	6.56	—	—	—	13/32	1.0000	2.25	1/4	1-1/4	28	X221-11VK	X221-3PK
226	2.44	6.56	6.56	—	—	15/32	1.2500	2.75	1/4	1-5/8	43	X226-11VK	X226-3PK
231	2.66	6.56	6.56	9.25	—	17/32	1.3750	3.00	5/16	1-3/4	69	X231-11VK	X231-3PK
239	3.09	—	6.96	9.25	10.13	19/32	1.8750	3.75	1/2	2	124	X239-11VK	X239-3PK
247	3.66	—	9.25	10.13	10.13	21/32	2.1250	4.25	1/2	2-1/2	166	X247-11VK	X247-3PK

*Assemblies define output (slow speed) shaft projection with respect to input (high speed) shaft and mounting surface, viewed from end of output shaft. Input may be rotated clockwise or counterclockwise. Input and Output shafts of Single reduction (S) units rotate in opposite directions, Double reduction (D) units in the same direction.

200 Series; 221-247 Sizes

Hollow Shaft

For ordering information See Page 249.

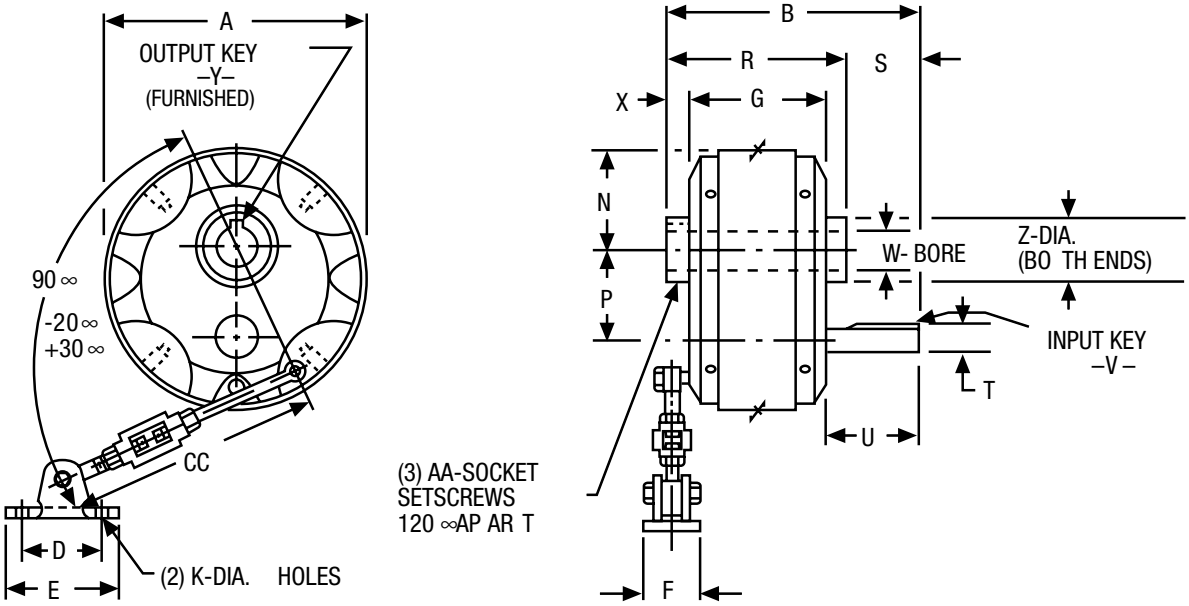

ALL DIMENSIONS IN INCHES

Size	A	B	D	E	F	G	K	N	P	R	S
221	6.19	5.88	2.25	3.31	1.06	3.31	.41	2.19	2.12	4.31	1.50
226	7.50	7.50	2.25	3.31	1.06	4.06	.41	2.19	2.60	5.18	2.31
231	8.88	8.37	2.62	3.69	1.06	4.75	.41	3.44	3.11	5.88	2.50
239	11.19	10.25	2.62	3.69	1.06	5.44	.41	4.03	3.89	6.69	3.56
247	12.88	10.88	3.00	4.31	1.31	5.94	.41	4.88	4.67	7.31	3.56

	High Speed Shaft				Low Speed Shaft							Optional* Reaction Rod Kit	
	T		V		W		Y						
Size	+.000 –.001	U	Sq.	Lgth.	+.001 –.000	X	Sq.	Lgth.	Z	AA	CC Max-Min	Catalog Number	Item Code
221	.5000	2.00	1/8	7/8	1.0000	.50	1/4 x 7/32	1-3/8	1.3750	#10-32	18-12	X221-76K	24188
226	.6250	2.88	3/16	1	1.2500	.56	1/4 x 7/32	1-1/2	1.7702	1/4-28	30-24	X226-76K	24190
231	.9375	3.06	1/4	1-1/4	1.4375	.56	3/8 x 5/16	1-3/4	2.1638	1/4-28	30-24	X231-76K	24192
239	1.3750	4.19	5/16	2-7/16	1.9375	.62	1/2 x 3/8	2	2.5575	5/16-24	30-24	X239-76K	24194
247	1.5675	4.25	3/8	2-1/4	2.1875	.69	1/2 x 3/8	2-1/4	2.9512	3/8-24	30-24	X247-76K	24196

* See page 264 for dimensions

J

200 Series Non-Flanged Reducer Dimensions

200 Series; Horizontal Base Projecting Shaft

Parallel Shafts

For ordering information See Page 249.

ASSEMBLY TYPES*

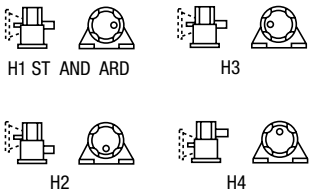

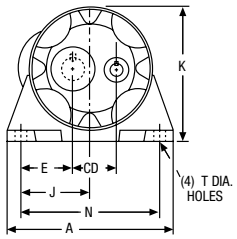

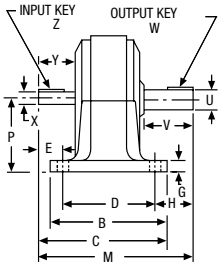

ALL DIMENSIONS IN INCHES

Size	C.D.	A	B	C	D	E	G	H	J	K	M	N	P
221	2.12	8.75	6.00	6.72	4.75	2.72	.50	2.16	3.63	6.84	8.25	7.25	3.75
226	2.60	11.00	7.38	8.59	5.75	3.56	.63	2.59	4.50	8.38	10.38	9.00	4.62
231	3.11	12.50	8.50	9.69	6.75	4.13	.75	2.72	5.13	9.88	11.53	10.25	5.44
239	3.89	15.50	9.75	11.78	7.75	4.94	.88	3.38	6.50	12.34	14.16	13.00	6.75
247	4.67	17.50	10.75	12.59	8.50	5.94	1.00	3.81	7.50	14.19	15.28	15.00	7.75

			Low Speed Shaft				High Speed Shaft					Optional	
					W-Key				Z-Key				
Size	C.D.	T Holes	U +.000 –.001	V	Sq.	Lgth.	X +.000 –.001	Y	Sq.	Lgth.	Approx. Weight (Lbs.)	Base Kit No. (Ref. page 251)	Output Shaft Kit No. (Ref. page 250)
221	2.12	13/32	1.0000	2.25	1/4	1-1/4	.5000	2.06	1/8	7/8	22	X221-11HK	X221-3PK
226	2.60	15/32	1.2500	2.75	1/4	1-1/4	.6250	2.88	3/16	1	39	X226-11HK	X226-3PK
231	3.11	17/32	1.3750	3.00	5/16	1-3/4	.9375	3.06	1/4	1-1/4	60	X231-11HK	X231-3PK
239	3.89	19/32	1.8750	3.75	1/2	2	1.3750	4.19	5/16	2-7/16	104	X239-11HK	X239-3PK
247	4.67	21/32	2.1250	4.25	1/2	2-1/2	1.5625	4.25	3/8	2-1/4	148	X247-11HK	X247-3PK

200 Series; Vertical Base Projecting Shaft

Parallel Shafts

ASSEMBL Y TYPES*

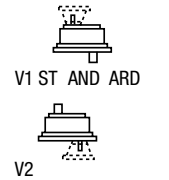

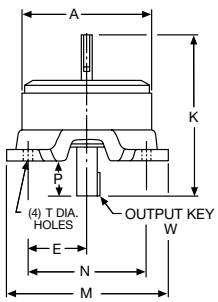

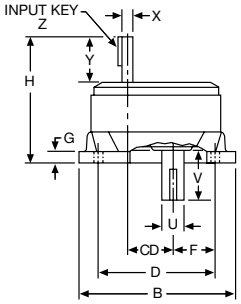

ALL DIMENSIONS IN INCHES

Size	C.D.	A	B	D	E	F	G	H	K	M	N	P
221	2.12	6.19	8.00	5.75	2.88	1.97	.50	6.28	8.25	8.25	5.75	1.97
226	2.60	7.50	9.63	7.00	3.50	2.56	.63	7.94	10.38	9.88	7.00	2.44
231	3.11	8.88	11.00	8.25	4.13	3.13	.75	8.88	11.53	11.25	8.25	2.66
239	3.89	11.19	13.63	10.25	5.13	3.56	.88	11.06	14.16	13.88	10.25	3.09
247	4.67	12.88	15.50	11.75	5.88	4.31	1.00	11.63	15.28	16.00	11.75	3.66

			Low Speed Shaft				High Speed Shaft					Optional	
					W-Key				Z-Key				
Size	C.D.	T Holes	U +.000 –.001	V	Sq.	Lgth.	X +.000 –.001	Y	Sq.	Lgth.	Approx. Weight (Lbs.)	Base Kit No. (Ref. page 251)	Output Shaft Kit No. (Ref. page 250)
221	2.12	13/32	1.0000	2.25	1/4	1-1/4	.5000	2.06	1/8	7/8	22	X221-11VK	X221-3PK
226	2.60	15/32	1.2500	2.75	1/4	1-1/4	.6250	2.88	3/16	1	39	X226-11VK	X226-3PK
231	3.11	17/32	1.3750	3.00	5/16	1-3/4	.9375	3.06	1/4	1-1/4	60	X231-11VK	X231-3PK
239	3.89	19/32	1.8750	3.75	1/2	2	1.3750	4.19	5/16	2-7/16	104	X239-11VK	X239-3PK
247	4.67	21/32	2.1250	4.25	1/2	2-1/2	1.5625	4.25	3/8	2-1/4	148	X247-11VK	X247-3PK

* Assemblies define output (slow speed) shaft projection with respect to input (high speed) shaft and mounting surface, viewed from end of output shaft. Input may be rotated clockwise or counterclockwise.

- Input and Output shafts of Single reduction (S) units rotate in opposite directions, Double reduction (D) units in the same direction.

J

200 Series; 221-247 Sizes

External Reference Surfaces

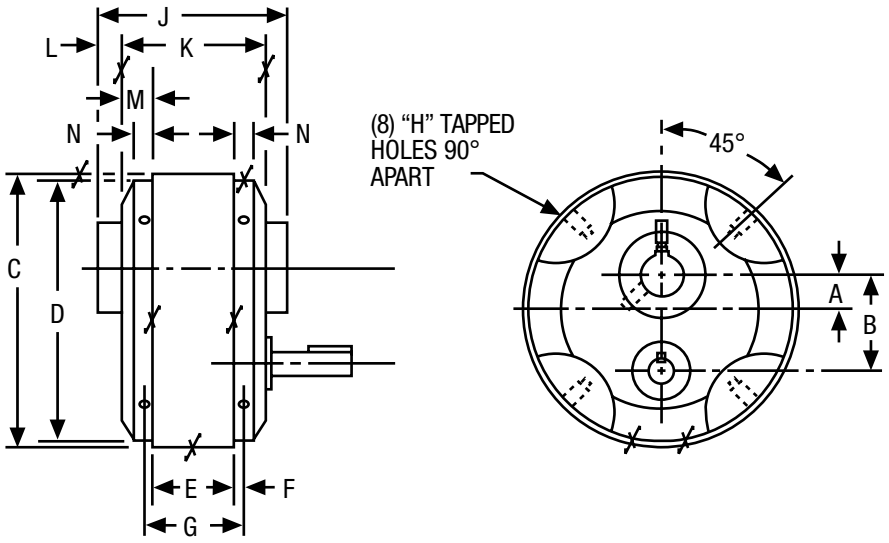

ALL DIMENSIONS IN INCHES

Size	A ±.005	B +.002 -.000	C* +.000 -.010	D* +.000 -.003	E* +.000 -.004	F	G	H		J	K	L	M	N
								Size	Depth					
221	.904	2.123	6.193	5.998	2.000	.19	2.38	1/4-20	9/16	4.31	3.31	.50	.66	.44
226	.936	2.595	7.495	7.248	2.062	.38	2.81	5/16-18	5/8	5.19	4.06	.56	1.00	.69
231	1.000	3.114	8.870	8.624	2.625	.34	3.31	3/8-16	3/4	5.88	4.75	.56	1.06	.69
239	1.560	3.893	11.182	10.936	3.312	.34	4.00	3/8-16	3/4	6.69	5.44	.62	1.06	.69
247	1.560	4.671	12.870	12.624	3.687	.38	4.44	7/16-14	7/8	7.31	5.94	.69	1.12	.75

*Tolerance on Dimensions Apply Only to Housing before Painting.

J

Steel Projecting Output Shafts (Insertable)



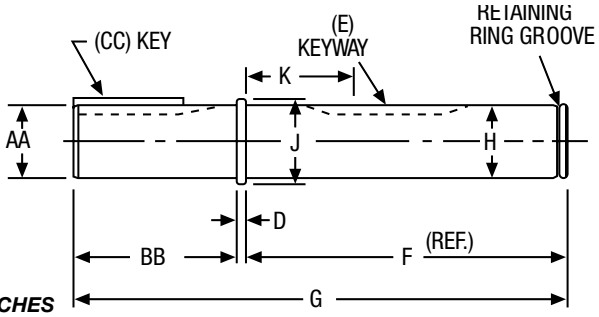

ALL DIMENSIONS IN INCHES
ORDER BY CATALOG NUMBER OR ITEM CODE

Size	AA	BB	CC		D	E	F	G	H	J	K	Kit Catalog Number	Item Code
			Sq.	Lgth.									
221	.9995 .9985	2-1/4	1/4	1-1/4	.12	1/4 x 1/8 x 1-13/32	4.47	6.84	.9998 .9988	1.16	1.45	X221-3PK	**23888**
226	1.2495 1.2485	2-3/4	1/4	1-1/4	.12	1/4 x 1/8 x 1-17/32	5.38	8.25	1.2498 1.2488	1.41	1.83	X226-3PK	**23892**
231	1.3745 1.3735	3	5/16	1-3/4	.16	3/8 x 3/16 x 1-25/32	6.09	9.25	1.4373 1.4363	1.62	2.75	X231A-3PK	**63124**
239	1.8745 1.8735	3-3/4	1/2	2	.16	1/2 x 1/4 x 2-1/32	7.00	10.91	1.9373 1.9363	2.12	2.33	X239-3PK	**23904**
247	2.1245 2.1235	4-1/4	1/2	2-1/2	.16	1/2 x 1/4 x 2-9/32	7.26	12.03	2.1873 2.1863	2.44	2.51	X247-3PK	**23910**

Reaction Rod Kits



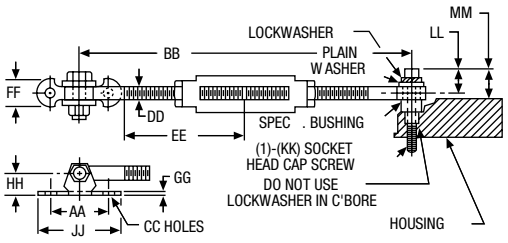

ALL DIMENSIONS IN INCHES
ORDER BY CATALOG NUMBER OR ITEM CODE

Size	AA	BB*		CC	DD	EE	FF	GG	HH	JJ	KK	LL	MM	Kit Catalog Number	Item Code
		Max.	Min.												
221	2.25	18	12	.41	.38	4.50	1.06	.16	.78	3.31	1/4-20 x 1-3/4 lg.	.62	.64	X221-76K	**24188**
226	2.25	30	24	.41	.50	10	1.06	.16	.78	3.31	1/4-20 x 2-1/4 lg.	.66	.94	X226-76K	**24190**
231	2.62	30	24	.41	.62	10	1.06	.19	.94	3.69	5/16-18 x 2-1/2 lg.	.81	1.12	X231-76K	**24192**
239	2.62	30	24	.41	.62	10	1.06	.19	.94	3.69	3/8-16 x 2-3/4 lg.	.91	1.44	X239-76K	**24194**
247	3.00	30	24	.47	.75	10	1.31	.21	1.12	4.21	7/16-14 x 3 lg.	1.03	1.41	X247-76K	**24196**

* BB dimension can be reduced by cutting off threaded rods.

INSTALLATION INFORMATION

The ideal position of the reaction rod is at 90° from a line drawn through the center of the hollow shaft and the point where reaction rod is attached to the housing or bracket.

This is illustrated in Figure 1, along with allowable angular deviations.

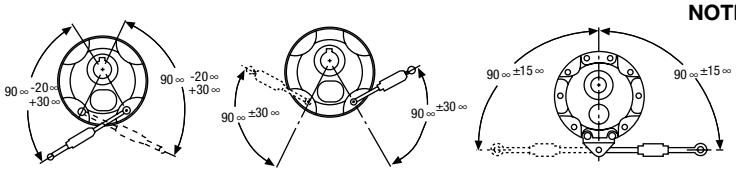

221 to 247 252 & 259

Figure 1

Figure 2 illustrates in a typical manner the possible reaction rod positions for shaft mounted reducers in horizontal or vertical positions.

NOTE: The reaction rod must be attached to the housing only at the screw locations identified by the spot faced surfaces or to the reaction rod bracket attached to the housing.

Figure 2

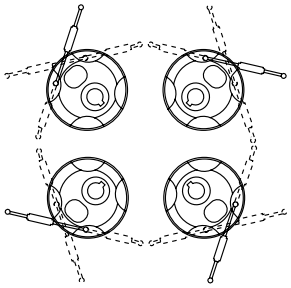

J

Base Kits (Cast Iron)



HORIZONTAL

Kit Catalog No.	Item Code
X221-11HK	**68643**
X226-11HK	**68654**
X231-11HK	**68656**
X239-11HK	**68658**
X247-11HK	**68660**



VERTICAL

Kit Catalog No.	Item Code
X221-11VK	**68644**
X226-11VK	**68655**
X231-11VK	**68657**
X239-11VK	**68659**
X247-11VK	**68661**

200 Series Optimount® Washdown Duty



200 SERIES – BOST-KLEEN™

- Washable and Scrubbable
- Durable, Non-Absorbent, Non-Toxic White Epoxy Finish, USDA Approved
- Corrosion Resistant
- 1/4 to 20 Horsepower Range
- Single and Double Reducton Rations – 4:1 to 24:1
- Standard NEMA C-Face and Projecting Input Shaft Configurations
- Parallel Shafts
- Horizontal and Vertical Mounting Kits
- Projecting and Hollow Output Shafts

STAINLESS BOST-KLEEN™

- Includes all features of the Standard WHITE BOST-KLEEN Reducers
- U.S.D.A. Approved for use in Food Processing and Handling Industry where incidental food contact may occur
- Durable Stainless Steel Epoxy Coating System Utilizes a unique #316L Stainless Steel Leafing Pigment. This catalyzed system creates a HARD, NON-TOXIC METALLIC FINISH

BISSC Certified Basic Model Numbers, Dimensions And Available Ratios

White BOST-KLEEN		Stainless BOST-KLEEN						
NON-FLANGED Type	Quill Type	NON-FLANGED Type	Quill Type	Center Distance	NEMA Mounting	Input Shaft Dia. +.000 -.001	Output Shaft Dia. +.000 -.001	Available Ratios
BK221	BKF221	SBK221	SBKF221	2.12	56C	.500	1.000	4,10,14,17,20,24
BK226	BKF226	SBK226	SBKF226	2.60	56C,140TC	.625	1.2500	4,10,14,17,20,24
BK231	BKF231	SBK231	SBKF231	3.11	56C,140TC,180TC	.9375	1.3750	4,10,14,17,20,24
BK239	BKF239	SBK239	SBKF239	3.89	140TC,180TC, 210TC	1.375	1.8750	4,10,14,17,20,24
BK247	BKF247	SBK247	SBKF247	4.67	180TC,210TC	1.5625	2.1250	4,10,14,17,20,24

Installation, Lubrication and Operation Instructions

Warning: *Boston Gear speed reducers are normally shipped without lubricant. They must be filled to the proper level with the recommended lubricant before operation.*

CAUTION

- For safe operation of any gear drive, all rotating shafts and auxiliary components must be shielded to conform with applicable safety standards. You must consider overall operational system safety at all times.
- When using a gear drive to raise or lower a load, such as in hoisting applications, provision must be made for external braking. Under no conditions should a speed reducer be considered self-locking.
- Mounting of speed reducers in overhead positions may be hazardous. Use of external guides or supports is strongly recommended for overhead mounting.

General Instructions

1. When mounting, use maximum possible bolt size and secure gear drive to a rigid foundation. Periodic inspection of all bolts is recommended.
2. Align all shafts accurately. Improper alignment can result in failure. Use of flexible couplings is recommended to compensate for slight misalignment.
3. Arrange the drain and breather plug per your mounting position as indicated on page 268. The breather plug should also be located in the *Fill* position.
4. Auxiliary drive components (such as sprockets, gears and pulleys) should be mounted on the shafts as close as possible to the housing to minimize effects of overhung loads. Avoid force fits that might damage bearings or gears.
5. Gear drives are nameplated for 1750 RPM Input Speed and Class I Service. For lower Input Speeds and other Service Class, refer to catalog rating information
6. Input Speeds of 1750 and lower are shown in catalog rating tables for speed reducing applications. This does not represent the maximum speed. Since speed limitation is based on pitching velocity and varies with size and ratio.

Shaft Mounted Installation

Mount reducer on the shaft to be driven, as close to the supporting bearing as possible, and tighten end setscrews. For installations requiring an adapter bushing, the setscrews must pass through clearance holes in the bushing. For severe applications, the driven shaft should be spot drilled for these setscrews.

Instructions for Flanged Models

F200 (Quill Type Input)

1. Assemble the key to the motor shaft and coat the shaft with anti-seize compound. Insert the motor shaft into the reducer input shaft.
2. Rotate the motor to proper position and firmly secure to flange with four hex-head cap screws.

CAUTION - If the motor does not readily seat itself, check to determine if key has moved axially along motor shaft, causing interference. Staking of the keyway adjacent to the motor key will facilitate this procedure.

Location of Filler, Level and Drain Plugs

Optimount reducers may be mounted in any position shown with the following exceptions:

Filler, level and drain plugs are completely interchangeable and should be arranged to suit the required mounting positions. Four (4) pipe tapped holes for these plugs are located on the input shaft side of the housing and one (1) on the opposite side.

J

200 SERIES HORIZONTAL BASE

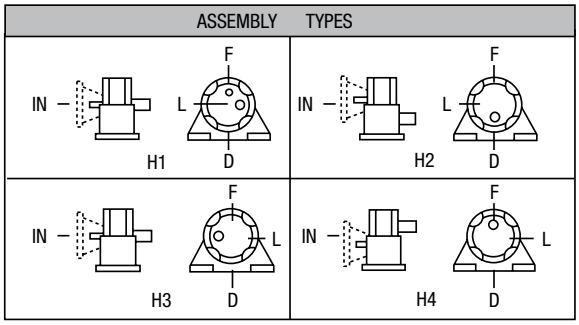

200 SERIES VERTICAL BASE

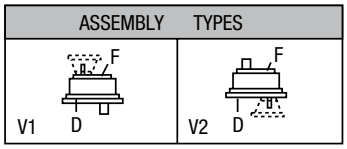

Recommended Lubricants

The following tables indicate the type and viscosity of lubricant suitable for reducers operating at various temperatures.

Lubrication and maintenance instructions are provided with each speed reducer. These instructions should be followed for best results. It is important that the proper type of oil be used since many oils are not suitable for the lubrication of gears. Various types of gearing require different types of lubricants.

The lubricant must remain free from oxidation and contamination by water or debris since only a very thin film of oil stands between efficient operation and failure. To assure long service life, the reducer should be periodically drained (preferably while warm) and refilled to the proper level with a recommended gear oil. Under normal environmental conditions oil changes, are suggested after the initial 250 hours of operation, and thereafter, at regular intervals of 2500 hours or every 6 months. Synthetic lubricants will allow extended lubrication intervals due to its increased resistance to thermal and oxidation degradation. It is suggested that the initial oil change be made at 1500 hours and, thereafter, at 5000 hour intervals.

During the initial period of operation, higher than normal operating temperatures may be seen. This is due to the initial break-in of the gear set. The temperature of Helical Gear Reducers may reach 160°F.

Enclosed Helical

Ambient (Room) Temperature	Recommended Oil (or equivalent)	Viscosity Range S&S @ 100°F	Oil Type	ISO Viscosity Grade No.
–20° to 225°F ‡ (-29°C to 107°C)	Klubersynth* UH1 6-460	1950/2500	PAG	460
–30° to 225°F ‡ (-34°C to 107°C)	Mobile SHC634	1950/2500	PAO	320 / 460

Recommended Lubricant	Boston Gear Item Code Quart
Klubersynth UH1 6-460	65159
Mobile SHC634	51493

CAUTION: Relubricate more frequently, if drive is operated in high ambient temperatures or unusually contaminated atmospheres. High loads and operating temperatures will also require more frequent relubrication.
* Synthetic recommendation is exclusively for Klubersynth UH1 6-460.
‡ The UH1 6-460 lubricant will perform at temperatures considerably higher than 225°F. However, the factory should always be consulted prior to operating at higher temperatures, as damage may occur to oil seals and other components.

Drain Plug must be installed in the lower most location of the housing. This plug will be on the input shaft side of the housing for positions H1, H3, H4 and V2. The opposite for position V1 and may be either side for H2.

The **Vented Filler Plug** should be installed in the uppermost location. This plug will be on the input shaft side for positions H1, H2, or H3, on either side for H4 and must be tightened into position with the arrow pointing upward.

For vertical mounting (V1 and V2), this plug must be tightened with arrow pointing toward the center.

Level Plug position will be as indicated for horizontal positions. For vertical positions the oil level is established by an oil level distance measured from the outer surface of the housing from the oil filler hole.

Size	Single Reduction		Double Reduction	
	Oil Dist. (Inches)	Capacity (Qts)	Oil Dist. (Inches)	Capacity (Qts)
221	1.25	.38	1.00	.50
226	1.62	.75	1.38	1.00
231	2.00	1.25	1.62	1.50
239	2.12	2.75	1.88	3.00
247	2.25	4.00	1.88	4.25

J

Models 221-247

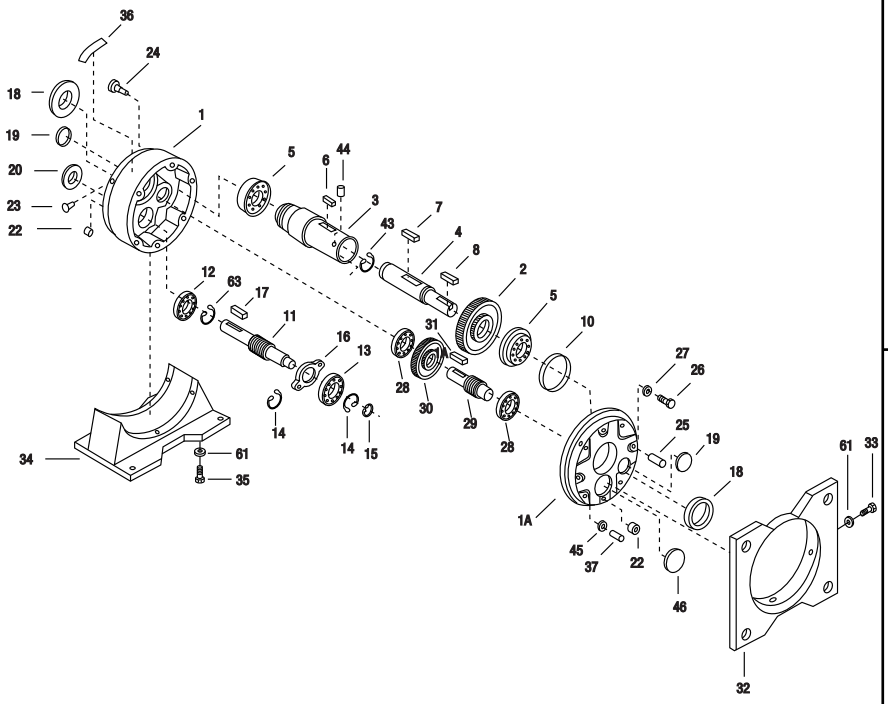

Models F221-F247

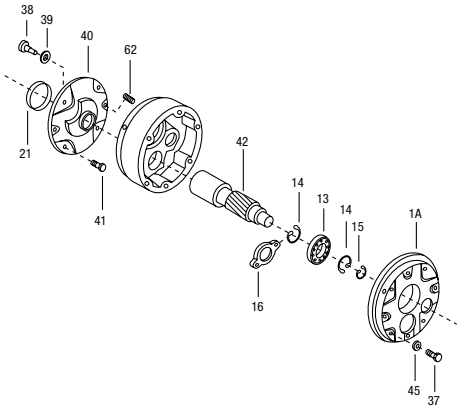

Reaction Arm Kit

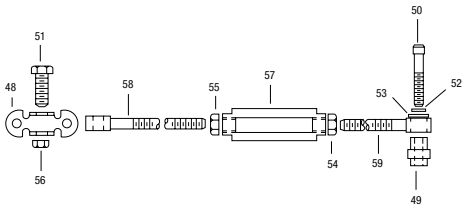

Part No.	Description of Part
1	HOUSING, BODY
1A	HOUSING, COVER
2	HELICAL GEAR (OUTPUT)
3	HOLLOW OUTPUT SHAFT
4	SOLID OUTPUT SHAFT, INSERT
4A	N/A
5	BALL BEARING
6	KEY, OUTPUT GEAR
7	KEY
8	KEY
9	N/A
10	SHIM
11	INPUT HELICAL PINION
12	BALL BEARING
13	BALL BEARING
14	RETAINING RING (FOR 221 ONLY)
15	RETAINING RING
16	BEARING RETAINER (FOR 226-247)
17	KEY
18	OIL SEAL
19	BORE PLUG
20	OIL SEAL
21	OIL SEAL

Part No.	Description of Part
22	PIPE PLUG
23	PLASTIC PLUG
24	VENTED OIL FILLER
25	DOWEL PIN
26	SOC. HEAD CAPSCREW
27	LOCKWASHER
28	BALL BEARING
29	INTERM. HELICAL PINION
30	INTERM. HELICAL GEAR
31	KEY, INTERM. GEAR
32	VERTICAL BASE
33	SOC. HEAD CAPSCREW
34	HORIZONTAL BASE
35	SOC. HEAD CAPSCREW
36	NAMEPLATE
37	BUTTON HD. CAPSCREW (FOR 226-247)
38	SOC. HEAD CAPSCREW
39	LOCKWASHER
40	MOTOR FLANGE
41	HEX HEAD CAPSCREW
42	MOTOR SHAFT (INPUT)
43	RETAINING RING
44	HEX. SOC. SETSCREW

Part No.	Description of Part
45	ROLLED WASHER (FOR 226-247)
46	BORE PLUG
47	N/A
48	CLEVIS
49	BUSHING
50	SOC. HEAD CAPSCREW
51	HEX HEAD CAPSCREW
52	LOCKWASHER
53	FLATWASHER
54	NUT
55	NUT, LEFT HAND
56	NUT, LOCK
57	TURNBUCKLE
58	EYEBOLT, ROD END (LEFT HAND)
59	EYEBOLT, ROD END
61	LOCKWASHER
62	HEX. SOC. SETSCREW
63	RETAINING RING

PART ORDERING INFORMATION: Be sure to provide complete Boston Gear catalog number from speed reducer nameplate, along with part description and number.

J

Notes



J

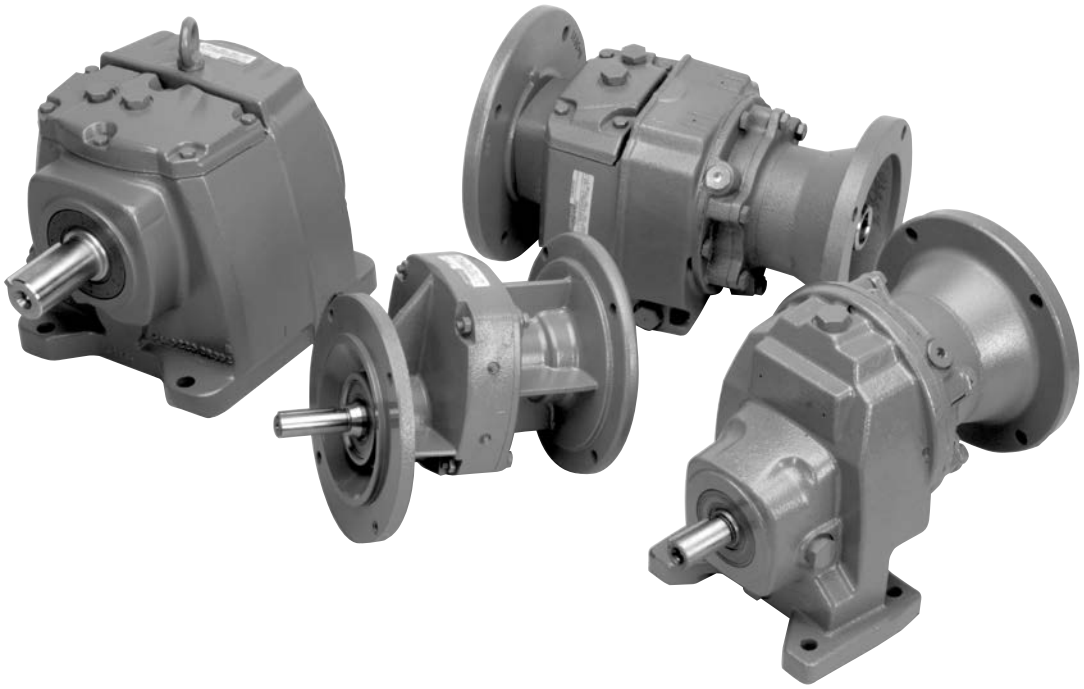

Section Contents

Product Reference Guide 272

Numbering System / How To Order 273

Selection Procedure. 274-275

Mounting Positions & Lubricants 276

Overhung Load 277

Output RPM Selection Tables 278-290

Reducer Ratings. 291-296

Dimensions 297-302

Washdown Duty 303

K

F600B Series Helical Gear Flanged Reducers

Ordering Information – Page 273
Lubrication – Page 276
Selection/Rating Information – Pages 278-290
Motor Selection – Pages 346 and 348

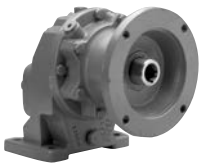

Single Reduction
Foot Mounted, Flange Input
Dimensions - Page 297



Double & Triple Reduction
Foot Mounted, Flange Input
Dimensions - Page 298

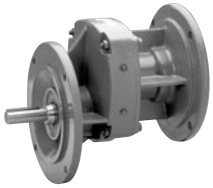

Single Reduction
Output Flange Mounted
Dimensions - Page 299



Double & Triple Reduction
Output Flange Mounted
Dimensions - Page 300

600B Series Helical Gear Non-Flanged Reducers

Ordering Information – Page 273
Lubrication – Page 276
Selection/Rating Information – Pages 278-290
Motor Selection – Pages 346 and 348



Single Reduction
Foot Mounted
Dimensions - Page 301



Double & Triple Reduction
Foot Mounted
Dimensions - Page 302

200 Series Catalog Number

*BK F 6 3 2 B F – 16 – K – B9 – MOTOR CATALOG NUMBER (If Required)

Input Shaft Style
Blank– Projecting Input Shaft
F – Quill Style C-Face Motor Flange

Reducer Size
1
2
3
4
5
6

Number of Reductions
1 – Single (4:1 only)
2 – Double
3 – Triple

Lubrication
Blank– No Lubrication
K – Klubersynth UH1 6-460

Reducer Material/Paint (Cast Iron)
Blank– Standard Paint
BK – *BostKleen* White Paint
SBK – Stainless *BostKleen* Paint

Series 600 Series

Base/Mounting Attachment
Blank– Foot Mounted
F – Output Flange

Nominal Gear Ratio
Refer to Selection Table for Available Ratios

NEMA Motor Mounting

Code Bore	NEMA Mounting	Input Size	Keyway
B5	56C	.625	3/16 x 3/32
B7	140TC/180C	.875	3/16 x 3/32
B9	180TC/210C	1.125	1/4 x 1/8
B11	210TC/250UC	1.375	5/16 x 5/32
B13	250TC	1.625	3/8 x 3/16
Blank– Solid Input Shaft (No Flange)			

***Example —** Above listed configuration is an example part number using this numbering system.

How to Order

When ordering please note the complete catalog number and/or item code. With either of these two numbers your local distributor will have several alternatives to enter your order into the Boston Gear system.

Example: Required flanged input, reducer size 3, 16:1 ratio, double reduction, no lubrication, NEMA mounting 182TC motor to be 3 HP, 1750 RPM, 230/460 volt, 3 phase, 60 Hz totally enclosed fan cooled

Order: 1 pc F632B-16-B9 or 5 digit item code 28300
1 pc LUTF, ref page 340.

Available Configurations

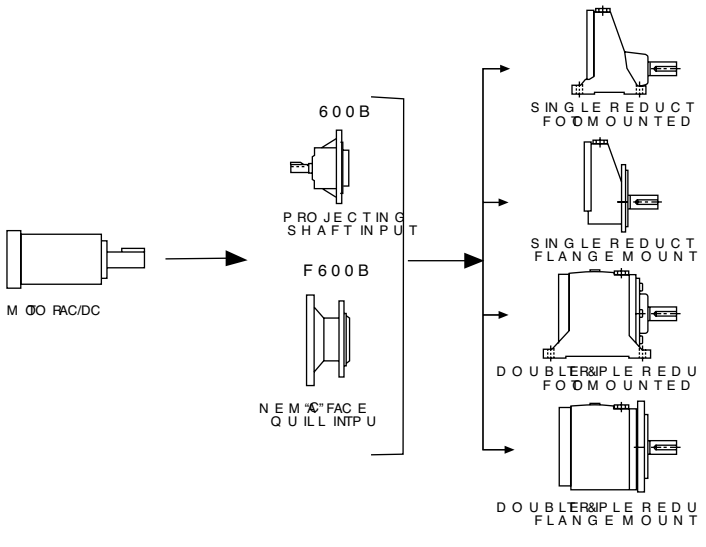

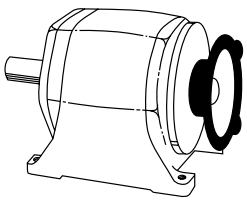

Quill Type
NEMA C-Face
Hollow input shaft with keyway to accept motor shaft and key.

PREFIX – "F"

Note: For applications requiring backstop or other special considerations, please consult factory.

K

To properly select a speed reducer, the following application information should be known.

1. Service Factor or AGMA Service class.
2. Output Horsepower or Torque
3. Output RPM or Ratio

Non-Motorized Speed Reducer

1. Determine application service factor from table 1 or from application classification tables on pages 354-355.
2. Determine design Horsepower or Torque.
   – Design HP = Application HP x S.F.
   – Design Torque = Application Torque x S.F.
3. Select a Speed reducer that satisfies output RPM, service class and/or output torque requirement. Ref. rating tables pages 291-296.
4. Overhung shaft load should be checked when belt or chain drives are used, to prevent premature shaft or bearing failure. Reference page 275 for calculations.

Example

Select an in-line 600B Series Speed Reducer for a continuous duty concrete mixer requiring 8000 lb-in. of torque at approx. 35 RPM, to operate up to 8 hrs/day. The Speed Reducer will be driven at 1160 input RPM.

1. Application Service Factor = 1.25
2. Design Torque = 8000 x 1.25
   = 10,000 lb-in.
3. Select at speed and torque level of 10,000 lb-ins. or greater
4. Order 652B-32 (Item Code 28698)

NOTE: The use of an auxiliary drive between the speed reducer and the driven machine reduces the torque required at the output shaft in direct proportion to the auxiliary drive ratio.

A 3:1 chain ratio would reduce the torque requirement at the output shaft of the reducer to one-third, resulting in a smaller unit size selection.

SERVICE FACTOR TABLE 1

AGMA CLASS OF SERVICE	SERVICE FACTOR	OPERATING CONDITIONS
I	1.00	Moderate Shock-not more than 15 minutes in 2 hours. Uniform Load-not more than 10 hours per day.
II	1.25	Moderate Shock-not more than 10 hours per day. Uniform Load-more than 10 hours per day.
	1.50	Heavy Shock-not more than 15 minutes in 2 hours. Moderate Shock-more than 10 hours per day.
III	1.75 2.00	Heavy Shock-not more than 10 hours per day. Heavy Shock-more than 10 hours per day.

For complete AGMA Service Factors and Load Classifications, see Engineering Pages 354-355.

600 Series Ratio and Capacity Selection Tables

Non-Flanged Reducers; Input Speeds 1750 and 1150 RPM

Service Factor 1.0*

Catalog Number†	Item Code	Input Speed						Gear Ratio††
		1750 RPM			1160 RPM			
		Approx. Output RPM	Output Torque (LB-IN)(Max.)	Input HP (Max.)	Approx. Output RPM	Output Torque (LB-IN) (Max.)	Input HP (Max.)	
612C-32	28682	55	791	0.7	36	821	.42	33.48
622B-32	28685	55	1780	1.68	36	1799	1.13	30.55
632B-32	28690	55	3977	3.79	36	4023	2.54	30.29
642B-32	28695	55	5910	5.4	36	6416	3.93	32.32
652B-32	28698	55	13826	12.52	36	14014	8.41	31.9
662B-32	28703	55	26088	25	36	26487	16.82	30.14
612C-40	28707	44	794	0.57	29	799	0.38	40.32
622B-40	28710	44	1790	1.33	29	1804	0.89	38.84
632B-40	28713	44	4002	2.95	29	4038	1.97	39.2

Reference Page 295

K

Motorized Speed Reducer

1. Determine application service factor from table 1 page 274 or from pages 354-355.
2. Determine output speed required
3. Determine HP or output torque requirement.
4. Select based on output speed and horsepower requirement for given service class.
5. Check overhung load (Reference calculation).

Example

Select an in-line motorized helical speed reducer and motor to drive a uniformly loaded line conveyor 24 hours/day requiring 3 HP at 35 RPM.

Power Requirement
230/460 volt
3 phase
60 hertz

1. Select Service Factor class pages 354-355 or from Table 1 page 274. Service Class = II
2. Output RPM = 35
3. 5 HP
4. Select a 5 HP drive that will satisfy min. of II service class.
5. O.H.L = 3670 # page 277
6. Order: 1 – F652B-50-B11 (28748) Ref. Pg. 287
   1 – NUTF Motor Ref. page 343 for specific motor mfg.

Overhung Load

If the output shaft of a speed reducer is connected to the driven machine by other than a flexible coupling, an overhung load is imposed on the shaft. This load may be calculated as follows:

$$OHL = \frac{2\,TK}{D}$$

OHL = Overhung Load (LB.)
T = Shaft Torque (LB.-INS.)
D = PD of Sprocket, Pinion or Pulley (IN.)
K = Load Connection Factor

Load Connection Factor (K)

Sprocket or Timing Belt 1.00
Pinion and Gear Drive 1.25
Pulley and V-Belt Drive. 1.50
Pulley and Flat Belt Drive 2.50

An overhung load greater than permissible load value may be reduced to an acceptable value by the use of a sprocket, pinion or pulley of a larger PD. Relocation of the load closer to the center of reducer will also increase OHL capacity.

Permissible Overhung Loads and Output Shaft Thrust Loads are listed for each reducer in the Tables on Pages 277.

600 Series Output RPM and Capacity Selection Tables

@ 1750 RPM Input

FOR RATINGS AT OTHER INPUT SPEEDS, SEE TABLES ON PAGES 291-296.
ORDER BY CATALOG NUMBER OR ITEM CODE

Output RPM	Ratio*	Non-Flanged Reducers: Gear Capacity: Output Torque (LB-IN.)	Non-Flanged Reducers: Gear Capacity: HP: Input	Non-Flanged Reducers: Gear Capacity: HP: Output	Non-Flanged Reducers: Catalog No. (Item Code)	Flanged Reducers (Gearmotors): Ratings: Motor HP	Ratings: Output Torque (LB-IN.)	Ratings: S.C.**	Catalog Numbers (Item Code): Foot Mounted	Catalog Numbers (Item Code): Output Flange Mounted	AC Motors†	DC Motors††
35	50	6100	3.46	3.25	643B-50 (28742)	3	5288	I	F643B-50-B9 (28743)	F643BF-50-B9 (28744)	LUTF	PM18300
						2	3525	II	F643B-50-B7 (28745)	F643BF-50-B7 (28746)	KUTF	PM18200
						1.5	2644	III			JUTF	PM18150
		14004	8.03	7.71	652B-50 (28747)	7.5	13048	I	F652B-50-B11 (28748)	F652BF-50-B11 (28749)	NUTF	—
						5	8699	II	F652B-50-B9 (28750)	F652BF-50-B9 (28751)	MUTF	—
						3	5219	III			LUTF	PM18300

* Gear Ratio is Approximate. For Actual Gear Ratio Reference Page 291-296.
** Class I (S.F. = 1.00) Class II (S.F. = 1.50) Class III (S.F. = 2.00)
† AC Motors – 230/460-3-60 TEFC, for specific motor manufacturers and 5 digit item code refer to pages 343-345.
†† DC Motors – 90 VDC or 180 VDC where applicable, for specific motor manufacturers and 5 digit item code ref. pages 340, 346 and 347.
Overhung Load Ratings refer to Pages 277.

600 Series Mounting Positions & Lubrication

K

Foot Mounted

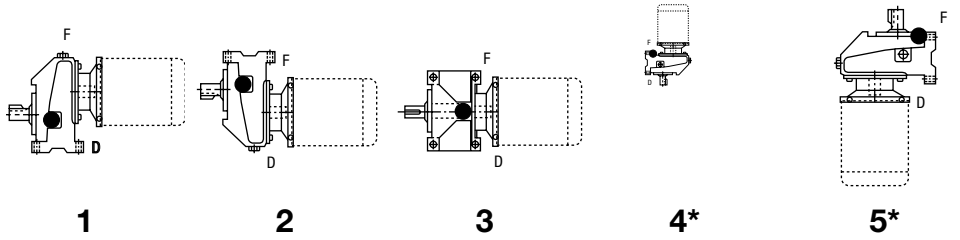

Output Flange Mounted

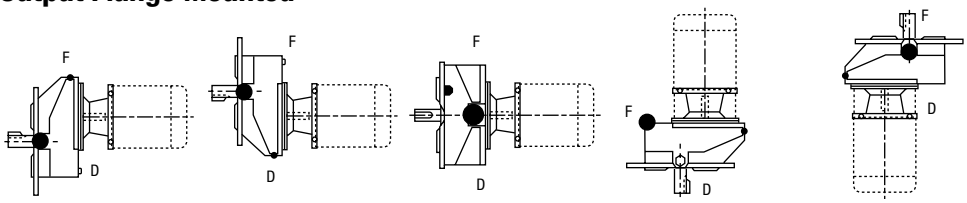

CAUTION

Mounting of speed reducers in overhead positions may be hazardous. Use of external guides or supports is strongly recommended for overhead mounting.

Mounting positions are the same for multiple reduction units, and for non-flanged reducers.
F - Fill • - Oil Level, D - Drain.
* Position 4 and 5, Level Should be 1/2" Below Top Fill.

Recommended Lubricant

Synthetic lubricants are recommended for 600B Series reducers, and at all times, the lubricant must remain free from contamination. During the initial break-in of the gear set, higher than normal operating temperatures may result.

An initial oil change should be made after the first 1,500-hours of operation and at 5,000-hour intervals thereafter. Relubrication should be performed at shorter intervals if the reducer operates in high ambient temperatures or unusually contaminated environments.

For operating temperatures in excess of 225°F special seal considerations may be necessary.

Recommended Lubricant	Ambient (Room) Temperature	ISO Viscosity Grade No.	Boston Gear Item Code
			Quart
Klubersynth UH1 6-460	–20° to 225°F (-29° TO 107°C)	460	65159
Mobil SHC634	-30° to 225°F (-34° TO 107°C)	320/460	51493

FOOT MOUNTED REDUCERS†

Frame Size	Quarts per Mounting Position				
	1	2	3	4	5
611C	*	*	*	*	*
621B	0.37	0.74	0.53	0.58	1.06
631B	0.26	1.06	0.63	0.69	1.27
641B	0.95	2.01	1.48	2.22	2.22
651B	2.09	4.42	3.33	4.05	3.15
661B	3.38	7.71	6.34	6.13	8.03
612C/613C	*	*	*	*	*
622B/623B	0.63	1.16	0.90	1.22	1.48
632B/633B	1.00	2.38	2.43	2.38	2.85
642B/643B	1.69	4.76	4.62	4.76	4.65
652B/653B	3.49	7.08	7.08	7.93	7.93
662B/663B	5.49	13.95	13.21	15.53	14.48

OUTPUT FLANGE MOUNTED REDUCERS†

Frame Size	Quarts per Mounting Position				
	1	2	3	4	5
611CF	*	*	*	*	*
621BF	0.37	0.74	0.53	0.58	1.06
631BF	0.26	1.06	0.63	0.69	1.27
641BF	0.95	2.01	1.48	2.22	2.22
651BF	2.09	4.42	3.33	4.05	3.15
661BF	3.38	7.71	6.34	6.13	8.03
612CF/613CF	*	*	*	*	*
622BF/623BF	0.63	††	††	1.22	1.48
632BF/633BF	1.00	††	††	2.38	2.85
642BF/643BF	1.69	††	††	4.76	4.65
652BF/653BF	3.49	††	††	7.93	7.93
662BF/663BF	5.49	††	††	15.53	14.48

* Prelubricated for life.
† Oil capacities apply to non-flanged reducers as well.
†† Use mounting position number 1. Cannot use on mounting position 2 & 3.

Single Reduction Overhung Load (lbs.)*

Output RPM	Reducer Size					
	611	621	631	641	651	661
>1000	84	222	230	500	580	802
801-1000	80	229	250	600	615	757
551-800	75	240	288	648	674	1041
451-550	54	320	360	668	874	1234
351-450	33	334	370	806	1244	1495
<350	153	366	457	786	1560	1744

* Load is assumed to be in the center of the shaft extension

Multiple Reduction Overhung Load (lbs.)

Output RPM	Reducer Size					
	610	620	630	640	650	660
301-450	-----	455	460	890	1755	1983
201-300	-----	469	557	1200	1829	2065
151-200	129	591	670	1233	2013	2065
101-150	138	603	685	1296	2015	2163
51-100	388	701	850	1305	2472	2213
31-50	600	1030	1105	1305	3424	3733
16-30	600	1297	1357	1905	3670	4580
<15	600	1345	1610	1905	4340	4580

600 Series Output RPM and Capacity Selection Tables

@ 1750 RPM Input

K

FOR RATINGS AT OTHER INPUT SPEEDS, SEE TABLES ON PAGES 291-296.
ORDER BY CATALOG NUMBER OR ITEM CODE.

Output RPM	Ratio*	Non-Flanged Reducers				Flanged Reducers (Gearmotors)					AC Motors†	DC Motors††
		Gear Capacity			Catalog No. (Item Code)	Ratings			Catalog Numbers (Item Code)			
		Output Torque (LB-IN.)	HP			Motor HP	Output Torque (LB-IN.)	S.C.**	Foot Mounted	Output Flange Mounted		
			Input	Output								
1094	1.6	338	6.15	6.03	621B-1.6 (28000)	5	275	I	F621B-1.6-B9 (28001)	F621BF-1.6-B9 (28002)	MUTF	PM18500
						3	165	III	F621B-1.6-B7 (28003)	F621BF-1.6-B7 (28004)	LUTF	PM18300
		623	11.39	11.16	631B-1.6 (28005)	10	547	I	F631B-1.6-B11 (28006)	F631BF-1.6-B11 (28007)	PUTF	—
						7.5	410	II	F631B-1.6-B9 (28008)	F631BF-1.6-B9 (28009)	NUTF	—
						5	273	III			MUTF	PM18500
		761	13.43	13.16	641B-1.6 (28010)	10	568	I	F641B-1.6-B11 (28011)	F641BF-1.6-B11 (28012)	PUTF	—
						7.5	426	II			NUTF	—
						5	284	III	F641B-1.6-B9 (28013)	F641BF-1.6-B9 (28014)	MUTF	PM18500
		2292	41.74	40.91	651B-1.6 (28015)	20	1101	III	F651B-1.6-B13 (28016)	—	SUTF	—
		3230	57.18	56.03	661B-1.6 (28017)	20	1129	III	F661B-1.6-B13 (28018)	—	SUTF	—
875	2.0	212	3.06	3.00	611C-2 (28019)	2	138	II	F611C-2-B7 (28020)	F611CF-2-B7 (28021)	KUTF	PM18200
						1.5	104	III			JUTF	PM18150
		399	5.65	5.54	621B-2 (28022)	5	353	I	F621B-2-B9 (28023)	F621BF-2-B9 (28024)	MUTF	PM18500
						3	212	II			KUTF	PM18300
						2	141	III	F621B-2-B7 (28025)	F621BF-2-B7 (28026)	KUTF	PM18200
		708	10.35	10.14	631B-2 (28027)	10	684	I	F631B-2-B11 (28028)	F631BF-2-B11 (28029)	PUTF	—
						7.5	513	II			NUTF	—
						5	342	III	F631B-2-B9 (28030)	F631BF-2-B9 (28031)	MUTF	PM18500
		1030	14.33	14.04	641B-2 (28032)	10	720	I	F641B-2-B11 (28033)	F641BF-2-B11 (28034)	PUTF	—
						7.5	540	II			NUTF	—
						5	360	III	F641B-2-B9 (28035)	F641BF-2-B9 (28036)	MUTF	PM18500
		2521	36.29	35.56	651B-2 (28037)	20	1390	II	F651B-2-B13 (28038)	—	SUTF	—
						15	1043	III			RUTF	—

* Gear Ratio is Approximate. For Actual Gear Ratio Reference Page 291-296.
** Class I (S.F. = 1.00) Class II (S.F. = 1.50) Class III (S.F. = 2.00)
† AC Motors – 230/460-3-60 TEFC, for specific motor manufacturers and 5 digit item code refer to pages 343-345.
†† DC Motors – 90 VDC or 180 VDC where applicable, for specific motor manufacturers and 5 digit item code ref. pages 340, 346 and 347.
Overhung Load Ratings refer to Pages 277.

@ 1750 RPM Input

FOR RATINGS AT OTHER INPUT SPEEDS, SEE TABLES ON PAGES 291-296.
ORDER BY CATALOG NUMBER OR ITEM CODE.

Output RPM	Ratio*	Non-Flanged Reducers				Flanged Reducers (Gearmotors)					AC Motors†	DC Motors††
		Gear Capacity			Catalog No. (Item Code)	Ratings			Catalog Numbers (Item Code)			
		Output Torque (LB-IN.)	HP			Motor HP	Output Torque (LB-IN.)	S.C.**	Foot Mounted	Output Flange Mounted		
			Input	Output								
875 (Cont)	2.0	3735	52.88	51.82	661B-2 (28039)	20	1411	III	F661B-2-B13 (28040)	—	SUTF	—
700	2.5	275	3.06	3.00	611C-2.5 (28041)	2	180	II	F611C-2.5-B7 (28042)	F611CF-2.5-B7 (28043)	KUTF	PM18200
						1.5	135	III			JUTF	PM18150
		442	4.86	4.76	621B-2.5 (28044)	3	273	II	F621B-2.5-B9 (28045)	F621BF-2.5-B9 (28046)	LUTF	PM18300
						2	182	III	F621B-2.5-B7 (28047)	F621BF-2.5-B7 (28048)	KUTF	PM18200
		708	7.88	7.22	631B-2.5 (28049)	7.5	675	I	F631B-2.5-B11 (28050)	F631BF-2.5-B11 (28051)	NUTF	—
						5	450	II	F631B-2.5-B9 (28052)	F631BF-2.5-B9 (28053)	MUTF	PM18500
						3	270	III			LUTF	PM18300
		1273	13.96	13.68	641B-2.5 (28054)	10	910	I	F641B-2.5-B11 (28055)	F641BF-2.5-B11 (28056)	PUTF	—
						7.5	683	II			NUTF	—
						5	455	III	F641B-2.5-B9 (28057)	F641BF-2.5-B9 (28058)	MUTF	PM18500
		4152	48.17	47.21	661B-2.5 (28062)	20	1722	III	F661B-2.5-B13 (28063)	—	SUTF	—
557	3.2	340	2.98	2.92	611C-3.2 (28064)	2	229	II	F611C-3.2-B7 (28065)	F611CF-3.2-B7 (28066)	KUTF	PM18200
						1.5	171	III			JUTF	PM18150
		442	3.86	3.78	621B-3.2 (28067)	3	344	I	F621B-3.2-B9 (28069)	F621BF-3.2-B9 (28070)	LUTF	PM18300
						2	229	II	F621B-3.2-B7 (28071)	F621BF-3.2-B7 (28072)	KUTF	PM18200
						1.5	172	III			JUTF	PM18150
		708	6.50	6.37	631B-3.2 (28073)	5	545	I	F631B-3.2-B9 (28074)	F631BF-3.2-B9 (28075)	MUTF	PM18500
						3	327	III			LUTF	PM18300

* Gear Ratio is Approximate. For Actual Gear Ratio Reference Page 291-296.
** Class I (S.F. = 1.00) Class II (S.F. = 1.50) Class III (S.F. = 2.00)
† AC Motors – 230/460-3-60 TEFC, for specific motor manufacturers and 5 digit item code refer to pages 343-345.
†† DC Motors – 90 VDC or 180 VDC where applicable, for specific motor manufacturers and 5 digit item code ref. pages 340, 346 and 347.
Overhung Load Ratings refer to Pages 277.

600 Series Output RPM and Capacity Selection Tables

@ 1750 RPM Input

K

FOR RATINGS AT OTHER INPUT SPEEDS, SEE TABLES ON PAGES 291-296.
ORDER BY CATALOG NUMBER OR ITEM CODE.

Output RPM	Ratio*	Non-Flanged Reducers				Flanged Reducers (Gearmotors)					AC Motors†	DC Motors††
		Gear Capacity			Catalog No. (Item Code)	Ratings			Catalog Numbers (Item Code)			
		Output Torque (LB-IN.)	HP			Motor HP	Output Torque (LB-IN.)	S.C.**	Foot Mounted	Output Flange Mounted		
			Input	Output								
557 (Cont)	3.2	1127	10.10	9.90	641B-3.2 (28076)	10	1115	I	F641B-3.2-B11 (28077)	F641BF-3.2-B11 (28078)	PUTF	—
						7.5	836	II			LUTF	—
						5	557	III	F641B-3.2-B9 (28079)	F641BF-3.2-B9 (28080)	MUTF	PM18500
		2894	25.76	25.24	651B-3.2 (28081)	20	2244	I	F651B-3.2-B13 (28082)	—	SUTF	—
						15	1683	II			RUTF	—
						10	1122	III	F651B-3.2-B11 (28084)	F651BF-3.2-B11 (28085)	PUTF	—
		4655	42.96	42.10	661B-3.2 (28086)	20	2166	III	F661B-3.2-B13 (28087)	—	SUTF	—
438	4.0	372	2.58	2.53	611C-4 (28088)	2	288	I	F611C-4-B7 (28089)	F611CF-4-B7 (28092)	KUTF	PM18200
						1.5	216	II			JUTF	PM18150
						1	144	III	F611C-4-B5 (28091)	F611CF-4-B5 (28090)	HUTF-5/8	PM18100 PM9100-5/8
		442	3.19	3.1262	621B-4 (28093)	3	416	I	F621B-4-B9 (28094)	F621BF-4-B9 (28095)	LUTF	PM18300
						2	277	II	F621B-4-B7 (28096)	F621BF-4-B7 (28097)	KUTF	PM18200
						1.5	208	III			JUTF	PM18150
		708	5.15	5.05	631B-4 (28098)	5	686	I	F631B-4-B9 (28099)	F631BF-4-B9 (28100)	MUTF	PM18500
						3	412	II			LUTF	PM18300
						2	274	III	F631B-4-B7 (28106)	F631BF-4-B7 (28107)	JUTF	PM18150
		1315	9.42	9.23	641B-4 (28108)	7.5	1045	I	F641B-4-B11 (28109)	F641BF-4-B11 (28110)	NUTF	—
						5	697	II	F641B-4-B9 (28111)	F641BF-4-B9 (28112)	MUTF	PM18500
						3	418	III			LUTF	PM18300
		2903	20	19.60	651B-4 (28113)	20	2900	I	F651B-4-B13 (28114)	F651BF-4-B13 (28115)	SUTF	—
						15	2175	II			RUTF	—
						10	1450	III	F651B-4-B11 (28116)	F651BF-4-B11 (28118)	PUTF	—

* Gear Ratio is Approximate. For Actual Gear Ratio Reference Page 291-296.
** Class I (S.F. = 1.00) Class II (S.F. = 1.50) Class III (S.F. = 2.00)
† AC Motors – 230/460-3-60 TEFC, for specific motor manufacturers and 5 digit item code refer to pages 343-345.
†† DC Motors – 90 VDC or 180 VDC where applicable, for specific motor manufacturers and 5 digit item code ref. pages 340, 346 and 347.
Overhung Load Ratings refer to Pages 277.

@ 1750 RPM Input

FOR RATINGS AT OTHER INPUT SPEEDS, SEE TABLES ON PAGES 291-296.
ORDER BY CATALOG NUMBER OR ITEM CODE.

Output RPM	Ratio*	Non-Flanged Reducers				Flanged Reducers (Gearmotors)					AC Motors†	DC Motors††
		Gear Capacity				Ratings			Catalog Numbers (Item Code)			
		Output Torque (LB-IN.)	HP		Catalog No. (Item Code)	Motor HP	Output Torque (LB-IN.)	S.C.**	Foot Mounted	Output Flange Mounted		
			Input	Output								
438 (Cont)	4.0	5221	38.16	37.40	661B-4 (28119)	20 15	2738 2053	II III	F661B-4-B13 (28120)	—	SUTF RUTF	— —
350	5.0	192	1.05	1.03	611C-5 (28121)	1 .75 .5	182 137 91	I II III	F611C-5-B5 (28122)	F611CF-5-B5 (28123)	HUTF-5/8 GUTF FUTF	PM9100-5/8 PM18100-5/8 PM975 PM1875 PM950
		442	2.55	2.50	621B-5 (28124)	2 1.5	347 260	I II	F621B-5-B7 (28125)	F621BF-5-B7 (28126)	KUTF JUTF	PM18200 PM18150
						1	174	III	F621B-5-B5 (28127)	F621BF-5-B5 (28128)	HUTF-5/8	PM9100-5/8 PM18100-5/8
		708	4.11	4.03	631B-5 (28129)	3	516	II	F631B-5-B9 (28130)	F631BF-5-B9 (28131)	LUTF	PM18300
						2	344	III	F631B-5-B7 (28132)	F631BF-5-B7 (28133)	KUTF	PM18200
		1327	7.73	7.575	641B-5 (28134)	7.5	1289	I	F641B-5-B11 (28135)	F641BF-5-B11 (28137)	NUTF	—
						5 3	859 515	II III	F641B-5-B9 (28138)	F641BF-5-B9 (28139)	MUTF LUTF	PM18500 PM18300
		2903	16.01	15.69	651B-5 (28140)	15	2715	I	F651B-5-B13 (28141)	—	RUTF	—
						10 7.5	1810 1357	II III	F651B-5-B11 (28143)	F651BF-5-B11 (28144)	PUTF NUTF	— —
		5221	30.49	29.88	661B-5 (28145)	20 15	3422 2567	II III	F661B-5-B13 (28146)	—	SUTF RUTF	— —
278	6.3	1251	5.63	5.52	622B-6.3 (28147)	5 3	1109 666	I II	F622B-6.3-B9 (28148)	F622BF-6.3-B9 (28149)	MUTF LUTF	PM18500 PM18300
						2	444	III	F622B-6.3-B7 (28150)	F622BF-6.3-B7 (28151)	KUTF	PM18200
		2208	10.45	10.03	632B-6.3 (28152)	10 7.5	2108 1581	I II	F632B-6.3-B11 (28153)	F632BF-6.3-B11 (28154)	PUTF NUTF	— —
						5	1054	III	F632B-6.3-B9 (28155)	F632BF-6.3-B9 (28159)	MUTF	PM18500

* Gear Ratio is Approximate. For Actual Gear Ratio Reference Page 291-296.
** Class I (S.F. = 1.00) Class II (S.F. = 1.50) Class III (S.F. = 2.00)
† AC Motors – 230/460-3-60 TEFC, for specific motor manufacturers and 5 digit item code refer to pages 343-345.
†† DC Motors – 90 VDC or 180 VDC where applicable, for specific motor manufacturers and 5 digit item code ref. pages 340, 346 and 347.
Overhung Load Ratings refer to Pages 277.

600 Series Output RPM and Capacity Selection Tables

@ 1750 RPM Input

K

FOR RATINGS AT OTHER INPUT SPEEDS, SEE TABLES ON PAGES 291-296.
ORDER BY CATALOG NUMBER OR ITEM CODE.

Output RPM	Ratio*	Non-Flanged Reducers				Flanged Reducers (Gearmotors)					AC Motors†	DC Motors††
		Gear Capacity			Catalog No. (Item Code)	Ratings			Catalog Numbers (Item Code)			
		Output Torque (LB-IN.)	HP			Motor HP	Output Torque (LB-IN.)	S.C.**	Foot Mounted	Output Flange Mounted		
			Input	Output								
278 (Cont)	6.3	3615	16.28	15.63	642B-6.3 (28157)	15	3323	I	F642B-6.3-B13 (28158)	—	SUTF	—
						10	2215	II	F642B-6.3-B11 (28160)	F642BF-6.3-B11 (28161)	PUTF	—
						7.5	1661	III			NUTF	—
		7883	36.83	35.36	652B-6.3 (28162)	20	4292	II	F652B-6.3-B13 (28163)	—	SUTF	—
						15	3219	III			RUTF	—
		11903	53.87	51.72	662B-6.3 (28164)	20	4410	III	F662B-6.3-B13 (28165)	—	SUTF	—
219	8	762	2.69	2.58	612C-8 (28166)	2	564	I	F612C-8-B7 (28167)	F612CF-8-B7 (28168)	KUTF	PM18200
						1.5	423	II			JUTF	PM181500
						1	282	III	F612C-8-B5 (28169)	F612CF-8-B5 (28170)	HUTF-5/8	PM9100-5/8 PM18100-5/8
		1252	4.37	4.20	622B-8 (28171)	3	858	I	F622B-8-B9 (28172)	F622BF-8-B9 (28173)	LUTF	PM18300
						2	572	III	F622B-8-B7 (28174)	F622BF-8-B7 (28175)	KUTF	PM18200
		2208	7.95	7.63	632B-8 (28176)	7.5	2079	I	F632B-8-B11 (28177)	F632BF-8-B11 (28178)	NUTF	—
						5	1386	II	F632B-8-B9 (28179)	F632BF-8-B9 (28180)	MUTF	PM18500
						3	832	III			LUTF	PM18300
		3615	12.83	12.32	642B-8 (28181)	10	2813	I	F642B-8-B11 (28184)	F642BF-8-B11 (28185)	PUTF	—
						7.5	2110	II			NUTF	
						5	1407	III	F642B-8-B9 (28182)	F642BF-8-B9 (28183)	MUTF	PM18500
		10329	38.77	37.22	652B-8 (28186)	20	5315	II	F652B-8-B13 (28187)	—	SUTF	—
						15	3986	III			RUTF	—
		18252	66.63	63.96	662B-8 (28188)	20	5474	III	F662B-8-B13 (28199)	—	SUTF	—
175	10	768	2.17	2.08	612C-10 (28190)	2	705	I	F612C-10-B7 (28191)	F612CF-10-B7 (28192)	KUTF	PM18200
						1.5	529	II			JUTF	PM18150
						1	353	III	F612C-10-B5 (28193)	F612CF-10-B5 (28194)	HUTF-5/8	PM9100-5/8 PM18100-5/8

* Gear Ratio is Approximate. For Actual Gear Ratio Reference Page 291-296.
** Class I (S.F. = 1.00) Class II (S.F. = 1.50) Class III (S.F. = 2.00)
† AC Motors – 230/460-3-60 TEFC, for specific motor manufacturers and 5 digit item code refer to pages 343-345.
†† DC Motors – 90 VDC or 180 VDC where applicable, for specific motor manufacturers and 5 digit item code ref. pages 340, 346 and 347.
Overhung Load Ratings refer to Pages 277.

@ 1750 RPM Input

FOR RATINGS AT OTHER INPUT SPEEDS, SEE TABLES ON PAGES 291-296.
ORDER BY CATALOG NUMBER OR ITEM CODE.

Output RPM	Ratio*	Non-Flanged Reducers				Flanged Reducers (Gearmotors)					AC Motors†	DC Motors††
		Gear Capacity			Catalog No. (Item Code)	Ratings			Catalog Numbers (Item Code)			
		Output Torque (LB-IN.)	HP			Motor HP	Output Torque (LB-IN.)	S.C.**	Foot Mounted	Output Flange Mounted		
			Input	Output								
175 (Cont)	10	1252	3.46	3.32	622B-10 (28195)	3	1081	I	F622B-10-B9 (28196)	F622BF-10-B9 (28198)	LUTF	PM18300
						2	721	II	F622B-10-B7 (28199)	F622BF-10-B7 (28200)	KUTF	PM18200
						1.5	541	III			JUTF	PM18150
		2208	6.56	6.30	632B-10 (28201)	5	1680	II	F632B-10-B9 (28202)	F632BF-10-B9 (28203)	MUTF	PM18500
						3	1008	III			LUTF	PM18300
		3615	10.49	10.07	642B-10 (28204)	10	3449	I	F642B-10-B11 (28207)	F642BF-10-B11 (28208)	PUTF	—
						7.5	2587	II			NUTF	—
						5	1719	III	F642B-10-B9 (28861)	F642BF-10-B5 (28862)	MUTF	PM18500
		11933	35.65	34.22	652B-10 (28209)	20	6684	II	F652B-10-B13 (28210)	—	SUTF	—
						15	5013	III			RUTF	—
		20956	60.86	58.43	662B-10 (28211)	20	6871	III	F662B-10-B13 (28212)	—	SUTF	—
140	12.5	772	1.82	1.75	612C-12.5 (28213)	1.5	634	I	F612C-12.5-B7 (28214)	F612CF-12.5-B7 (28215)	JUTF	PM18150
						1	423	II	F612C-12.5-B5 (28216)	F612CF-12.5-B5 (28217)	HUTF-5/8	PM9100-5/8 PM18100-5/8
						.75	317	III			GUTF	PM975 PM1875
		1252	2.87	2.76	622B-12.5 (28218)	2	872	I	F622B-12.5-B7 (28219)	F622BF-12.5-B7 (28220)	KUTF	PM18200
						1.5	654	II			JUTF	PM18150
						1	436	III	F622B-12.5-B5 (28221)	F622BF-12.5-B5 (28222)	HUTF-5/8	PM9100 5/8 PM18100 5/8
		2208	5.2	4.99	632B-12.5 (28223)	5	2120	I	F632B-12.5-B9 (28224)	F632BF-12.5-B9 (28225)	MUTF	PM18500
						3	1272	II			LUTF	PM18300
						2	848	III	F632B-12.5-B7 (28226)	F632BF-12.5-B7 (28227)	KUTF	PM18200
		3615	8.39	8.05	642B-12.5 (28228)	7.5	3227	I	F642B-12.5-B11 (28231)	F642BF-12.5-B11 (28863)	NUTF	—
						5	2151	II	F642B-12.5-B9 (28876)	F642BF-12.5-B9 (28864)	MUTF	PM18500
						3	1291	III			LUTF	PM18300

* Gear Ratio is Approximate. For Actual Gear Ratio Reference Page 291-296.
** Class I (S.F. = 1.00) Class II (S.F. = 1.50) Class III (S.F. = 2.00)
† AC Motors – 230/460-3-60 TEFC, for specific motor manufacturers and 5 digit item code refer to pages 343-345.
†† DC Motors – 90 VDC or 180 VDC where applicable, for specific motor manufacturers and 5 digit item code ref. pages 340, 346 and 347.
Overhung Load Ratings refer to Pages 277.

600 Series Output RPM and Capacity Selection Tables

@ 1750 RPM Input

K

FOR RATINGS AT OTHER INPUT SPEEDS, SEE TABLES ON PAGES 291-296.
ORDER BY CATALOG NUMBER OR ITEM CODE.

Output RPM	Ratio*	Non-Flanged Reducers				Flanged Reducers (Gearmotors)					AC Motors†	DC Motors††
		Gear Capacity			Catalog No. (Item Code)	Ratings			Catalog Numbers (Item Code)			
		Output Torque (LB-IN.)	HP			Motor HP	Output Torque (LB-IN.)	S.C.**	Foot Mounted	Output Flange Mounted		
			Input	Output								
140 (Cont)	12.5	12844	30.33	29.12	652B-12.5 (28232)	20 15	8453 6340	II III	F652B-12.5-B13 (28234)	—	SUTF RUTF	— —
		23128	47.77	45.86	662B-12.5 (28235)	20	8592	III	F662B-12.5-B13 (28236)	—	SUTF	—
109	16	777	1.46	1.40	612C-16 (28251)	1 .75 .5	530 398 265	I II III	F612C-16-B5 (28252)	F612CF-16-B5 (28254)	HUTF-5/8 GUTF FUTF	PM9100-5/8 PM18100-5/8 PM975 PM1875 PM950
		1252	2.29	2.20	622B-16 (28256)	2 1.5	1091 819	I II	F622B-16-B7 (28265)	F622BF-16-B7 (28276)	KUTF JUTF	PM18200 PM18150
						1	546	III	F622B-16-B5 (28277)	F622BF-16-B5 (28284)	HUTF-5/8	PM9100 5/8 PM18100 5/8
		2208	4.15	3.98	632B-16 (28291)	3	1593	II	F632B-16-B9 (28300)	F632BF-16-B9 (28302)	LUTF	PM18300
						2	1062	III	F632B-16-B7 (28306)	F632BF-16-B7 (28328)	KUTF	PM18200
		3615	6.81	6.54	642B-16 (28330)	5 3	2649 1589	I III	F642B-16-B9 (28355)	F642BF-16-B9 (28360)	MUTF LUTF	PM18500 PM18300
		13452	24.63	23.64	652B-16 (28366)	20 15	10900 8175	I II	F652B-16-B13 (28384)	—	SUTF RUTF	— —
						10	5450	III	F652B-16-B11 (28385)	F652BF-16-B11 (28388)	PUTF	—
		23788	45.28	43.47	662B-16 (28390)	20	10486	III	F662B-16-B13 (28395)	—	SUTF	—
88	20	783	1.12	1.08	612C-20 (28396)	1 .75 .5	699 525 350	I II III	F612C-20-B5 (28538)	F612CF-20-B5 (28564)	HUTF-5/8 GUTF FUTF	PM9100-5/8 PM18100-5/8 PM975 PM1875 PM950
		1252	1.80	1.73	622B-20 (28570)	1.5	1040	I	F622B-20-B7 (28573)	F622BF-20-B7 (28586)	JUTF	PM18150
						1 .75	694 520	II III	F622B-20-B5 (28587)	F622BF-20-B5 (28588)	HUTF-5/8 GUTF	PM9100 5/8 PM18100 5/8 PM975 PM1875

* Gear Ratio is Approximate. For Actual Gear Ratio Reference Page 291-296.
** Class I (S.F. = 1.00) Class II (S.F. = 1.50) Class III (S.F. = 2.00)
† AC Motors – 230/460-3-60 TEFC, for specific motor manufacturers and 5 digit item code refer to pages 343-345.
†† DC Motors – 90 VDC or 180 VDC where applicable, for specific motor manufacturers and 5 digit item code ref. pages 340, 346 and 347.
Overhung Load Ratings refer to Pages 277.

@ 1750 RPM Input

FOR RATINGS AT OTHER INPUT SPEEDS, SEE TABLES ON PAGES 291-296.
ORDER BY CATALOG NUMBER OR ITEM CODE.

Output RPM	Ratio*	Non-Flanged Reducers				Flanged Reducers (Gearmotors)					AC Motors†	DC Motors††
		Gear Capacity			Catalog No. (Item Code)	Ratings			Catalog Numbers (Item Code)			
		Output Torque (LB-IN.)	HP			Motor HP	Output Torque (LB-IN.)	S.C.**	Foot Mounted	Output Flange Mounted		
			Input	Output								
88 (Cont)	20	2208	3.21	3.08	632B-20 (28589)	3	2060	I	F632B-20-B9 (28590)	F632BF-20-B9 (28591)	LUTF	PM18300
						2	1373	II	F632B-20-B7 (28592)	F632BF-20-B7 (28593)	KUTF	PM18200
						1.5	1030	III			JUTF	PM18150
		3615	6	5.76	642B-20 (28594)	5	2995	I	F642B-20-B9 (28597)	F642BF-20-B9 (28598)	MUTF	PM18500
						3	1797	III			LUTF	PM18300
		13601	19.86	19.07	652B-20 (28650)	15	10249	I	F652B-20-B13 (28651)	—	RUTF	—
						10	6833	II	F652B-20-B11 (28652)	F652BF-20-B11 (28653)	PUTF	—
						7.5	5124	III			NUTF	—
		24111	36.51	35.05	662B-20 (28654)	20	13181	II	F662B-20-B13 (28655)	—	SUTF	—
						15	9886	III			RUTF	—
70	25	787	.89	0.85	612C-25 (28656)	.75	663	I	F612C-25-B5 (28657)	F612CF-25-B5 (28658)	GUTF	PM975
						.5	442	II			FUTF	PM1875
						.33	292	III			EUTF	PM950
												PM933
		877	1	0.96	622B-25 (28659)	1	877	I	F622B-25-B5 (28660)	F622BF-25-B5 (28662)	HUTF-5/8	PM9100 5/8
						.75	658	II				PM18100 5/8
						.5	439	III			GUTF	PM975
											FUTF	PM1875
												PM950
		2208	2.51	2.41	632B-25 (28663)	2	1758	I	F632B-25-B7 (28664)	F632BF-25-B7 (28665)	KUTF	PM18200
						1.5	1319	II			JUTF	PM18150
						1	879	III	F632B-25-B5 (28666)	F632BF-25-B5 (28667)	HUTF-5/8	PM9100-5/8
												PM18100
		3615	4.23	4.23	642B-25 (28668)	3	2559	I	F642B-25-B9 (28672)	F642BF-25-B9 (28673)	LUTF	PM18300
						2	1706	III	F642B-25-B7 (28877)	F642BF-25-B7 (28878)	KUTF	PM18200
		13727	15.52	14.90	652B-25 (28674)	15	13245	I	F652B-25-B13 (28675)	—	RUTF	—
						10	8830	II	F652B-25-B11 (28676)	F652BF-25-B11 (28677)	PUTF	—
						7.5	6623				NUTF	—

* Gear Ratio is Approximate. For Actual Gear Ratio Reference Page 291-296.
** Class I (S.F. = 1.00) Class II (S.F. = 1.50) Class III (S.F. = 2.00)
† AC Motors – 230/460-3-60 TEFC, for specific motor manufacturers and 5 digit item code refer to pages 343-345.
†† DC Motors – 90 VDC or 180 VDC where applicable, for specific motor manufacturers and 5 digit item code ref. pages 340, 346 and 347.
Overhung Load Ratings refer to Pages 277.

600 Series Output RPM and Capacity Selection Tables

@ 1750 RPM Input

K

FOR RATINGS AT OTHER INPUT SPEEDS, SEE TABLES ON PAGES 291-296.
ORDER BY CATALOG NUMBER OR ITEM CODE.

Output RPM	Ratio*	Non-Flanged Reducers				Flanged Reducers (Gearmotors)					AC Motors†	DC Motors††
		Gear Capacity			Catalog No. (Item Code)	Ratings			Catalog Numbers (Item Code)			
		Output Torque (LB-IN.)	HP			Motor HP	Output Torque (LB-IN.)	S.C.**	Foot Mounted	Output Flange Mounted		
			Input	Output								
70 (Cont)	25	25876	31.03	29.79	662B-25 (28679)	20	16644	II	F662B-25-B13 (28681)	—	SUTF	—
						15	12483	III			RUTF	—
55	32	791	.7	0.67	612C-32 (28682)	.5	579	II	F612C-32-B5 (28683)	F612CF-32-B5 (28684)	FUTF	PM950
						.33	382	III			DUTF	PM925
		1780	1.68	1.61	622B-32 (28685)	1.5	1584	I	F622B-32-B7 (28686)	F622BF-32-B7 (28687)	JUTF	PM18150
						1	1056	II	F622B-32-B5 (28688)	F622BF-32-B5 (28689)	HUTF-5/8	PM9100-5/8
						.75	792	III			GUTF	PM1800-5/8 PM975 PM1875
		3977	3.79	3.64	632B-32 (28690)	3	3140	I	F632B-32-B9 (28691)	F632BF-32-B9 (28692)	LUTF	PM18300
						2	2094	II	F632B-32-B7 (28693)	F632BF-32-B7 (28694)	KUTF	PM18200
						1.5	1570	III			DUTF	PM18150
		5910	5.40	5.18	642B-32 (28695)	5	5585	I	F643B-32-B9 (28696)	F642BF-32-B9 (28697)	MUTF	PM18500
						3	3351	II			LUTF	PM18300
						2	2234	III	F643B-32-B7 (28879)	F643BF-32-B7 (28880)	KUTF	PM18200
		13826	12.52	12.02	652B-32 (28698)	10	11025	I	F652B-32-B11 (28699)	F652BF-32-B11 (28700)	PUTF	—
						7.5	8268	II			NUTF	—
						5	5512	III	F652B-32-B9 (28701)	F652BF-32-B9 (28702)	MUTF	PM18500
		26088	25	24.00	662B-32 (28703)	20	20833	I	F662B-32-B13 (28704)	—	SUTF	—
						15	15625	II			RUTF	—
						10	10416	III	F662B-32-B11 (28705)	F662BF-32-B11 (28706)	PUTF	—
44	40	794	.57	0.55	612C-40 (28707)	.5	697	I	F612C-40-B5 (28708)	F612CF-40-B5 (28709)	FUTF	PM950
						.33	460	II			EUTF	PM933
						.25	348	III			DUTF	PM925
		1790	1.33	1.28	622B-40 (28710)	1	1342	I	F622B-40-B5 (28711)	F622BF-40-B5 (28712)	HUTF-5/8	PM9100-5/8
						.75	1007	II			GUTF	PM18100-5/8 PM975
						.5	671	III			FUTF	PM1875 PM950

* Gear Ratio is Approximate. For Actual Gear Ratio Reference Page 291-296.
** Class I (S.F. = 1.00) Class II (S.F. = 1.50) Class III (S.F. = 2.00)
† AC Motors – 230/460-3-60 TEFC, for specific motor manufacturers and 5 digit item code refer to pages 343-345.
†† DC Motors – 90 VDC or 180 VDC where applicable, for specific motor manufacturers and 5 digit item code ref. pages 340, 346 and 347.
Overhung Load Ratings refer to Pages 277.

@ 1750 RPM Input

FOR RATINGS AT OTHER INPUT SPEEDS, SEE TABLES ON PAGES 291-296.
ORDER BY CATALOG NUMBER OR ITEM CODE.

Output RPM	Ratio*	Non-Flanged Reducers				Flanged Reducers (Gearmotors)					AC Motors†	DC Motors††
		Gear Capacity			Catalog No. (Item Code)	Ratings			Catalog Numbers (Item Code)			
		Output Torque (LB-IN.)	HP			Motor HP	Output Torque (LB-IN.)	S.C.**	Foot Mounted	Output Flange Mounted		
			Input	Output								
44 (Cont)	40	4002	2.95	2.83	632B-40 (28713)	2 1.5	2710 2032	I III	F632B-40-B7 (28714)	F632BF-40-B7 (28715)	KUTF JUTF	PM18200 PM18150
		6010	4.3	4.04	643B-40 (28716)	3	4172	II	F643B-40-B9 (28717)	F643BF-40-B9 (28718)	LUTF	PM18300
						2	2782	III	F643B-40-B7 (28719)	F643BF-40-B7 (28720)	KUTF	PM18200
		13901	10.5	10.08	652B-40 (28721)	10 7.5	13216 9912	I II	F652B-40-B11 (28722)	F652BF-40-B11 (28723)	PUTF NUTF	— —
						5	6608	III	F652B-40-B9 (28724)	F652BF-40-B9 (28725)	MUTF	PM18500
		26314	19.37	18.60	662B-40 (28726)	15	20337	II	F662B-40-B13 (28727)	—	RUTF	—
						10 7.5	13558 10168	III	F662B-40-B11 (28728)	F662BF-40-B11 (28729)	PUTF NUTF	— —
35	50	796	.45	0.42	613C-50 (28730)	.33 .25	549 416	II III	F613C-50-B5 (28731)	F613CF-50-B5 (28732)	EUTF DUTF	PM933 PM925
		1699	1	0.96	622B-50 (28733)	1 .75 .5	1699 1274 849	I II III	F622B-50-B5 (28734)	F622BF-50-B5 (28735)	HUTF-5/8 GUTF FUTF	PM9100-5/8 PM18100-5/8 PM975/PM1875 PM950
		4024	2.32	2.23	632B-50 (28736)	2 1.5	3469 2602	I II	F632B-50-B7 (28737)	F632BF-50-B7 (28738)	KUTF JUTF	PM18200 PM18150
						1	1735	III	F632B-50-B5 (28740)	F632BF-50-B5 (28741)	HUTF-5/8	PM9100-5/8 PM18100-5/8
		6100	3.46	3.25	643B-50 (28742)	3	5288	I	F643B-50-B9 (28743)	F643BF-50-B9 (28744)	LUTF	PM18300
						2 1.5	3525 2644	II III	F643B-50-B7 (28745)	F643BF-50-B7 (28746)	KUTF JUTF	PM18200 PM18150
		14004	8.03	7.71	652B-50 (28747)	7.5	13048	I	F652B-50-B11 (28748)	F652BF-50-B11 (28749)	NUTF	—
						5 3	8699 5219	II III	F652B-50-B9 (28750)	F652BF-50-B9 (28751)	MUTF LUTF	— PM18300

* Gear Ratio is Approximate. For Actual Gear Ratio Reference Page 291-296.
** Class I (S.F. = 1.00) Class II (S.F. = 1.50) Class III (S.F. = 2.00)
† AC Motors – 230/460-3-60 TEFC, for specific motor manufacturers and 5 digit item code refer to pages 343-345.
†† DC Motors – 90 VDC or 180 VDC where applicable, for specific motor manufacturers and 5 digit item code ref. pages 340, 346 and 347.
Overhung Load Ratings refer to Pages 277.

600 Series Output RPM and Capacity Selection Tables

@ 1750 RPM Input

K

FOR RATINGS AT OTHER INPUT SPEEDS, SEE TABLES ON PAGES 291-296.
ORDER BY CATALOG NUMBER OR ITEM CODE.

Output RPM	Ratio*	Non-Flanged Reducers				Flanged Reducers (Gearmotors)					AC Motors†	DC Motors††
		Gear Capacity			Catalog No. (Item Code)	Ratings			Catalog Numbers (Item Code)			
		Output Torque (LB-IN.)	HP			Motor HP	Output Torque (LB-IN.)	S.C.**	Foot Mounted	Output Flange Mounted		
			Input	Output								
35 (Cont)	50	26496	15.39	14.77	662B-50 (28752)	15	25770	I	F662B-50-B13 (28753)	—	RUTF	—
						10	17180	II	F662B-50-B11 (28754)	F662BF-50-B11 (28755)	PUTF	—
						7.5	12885	III			NUTF	PM18500
28	63	800	.4	0.38	613C-63 (28756)	.33	715	I	F613C-63-B5 (28757)	F613CF-63-B5 (28758)	EUTF	PM933
						.25	542	II			DUTF	PM925
		1406	.63	0.59	623B-63 (28759)	.5	1104	I	F623B-63-B5 (28760)	F623BF-63-B5 (28761)	FUTF	PM950
						.33	729	II			EUTF	PM933
						.25	552	III			DUTF	PM925
		4038	1.85	1.74	633B-63 (28762)	1.5	3259	I	F633B-63-B7 (28763)	F633BF-63-B7 (28764)	JUTF	PM18150
						1	2173	II	F633B-63-B5 (28765)	F633BF-63-B5 (28766)	HUTF-5/8	PM9100-5/8
						.75	1629	III			GUTF	PM18100-5/8 PM975 PM1875
		6100	2.73	2.57	643B-63 (28767)	2	4474	I	F643B-63-B7 (28768)	F643BF-63-B7 (28769)	KUTF	PM18200
						1.5	3356	II			JUTF	PM18150
						1	2237	III	F643B-63-B5 (28770)	F643BF-63-B5 (28771)	HUTF-5/8	PM9100 5/8 PM10100-5/8
		14084	6.48	6.09	653B-63 (28772)	5	10817	II	F653B-63-B9 (28773)	F653BF-63-B9 (28774)	MUTF	PM18500
						3	6490	III			LUTF	PM18300
		23239	11.13	10.46	663B-63 (28775)	10	20791	I	F663B-63-B11 (28776)	F663BF-63-B11 (28777)	PUTF	—
						7.5	15593	II			NUTF	—
						5	10396	II	F663B-63-B9 (28778)	F663BF-63-B9 (28779)	MUTF	PM18500
22	80	1519	.54	0.51	623B-80 (28780)	.5	1375	I	F623B-80-B5 (28781)	F623BF-80-B5 (28782)	FUTF	PM950
						.33	908	II			EUTF	PM933
						.25	688	III			DUTF	PM925
		4038	1.53	1.44	633B-80 (28783)	1.5	3952	I	F633B-80-B7 (28784)	F633BF-80-B7 (28785)	JUTF	PM18150
						1	2635	II	F633B-80-B5 (28786)	F633BF-80-B5 (28787)	HUTF-5/8	PM9100-5/8
						.75	1976	III			GUTF	PM18100-5/8 PM975

* Gear Ratio is Approximate. For Actual Gear Ratio Reference Page 291-296.
** Class I (S.F. = 1.00) Class II (S.F. = 1.50) Class III (S.F. = 2.00)
† AC Motors – 230/460-3-60 TEFC, for specific motor manufacturers and 5 digit item code refer to pages 343-345.
†† DC Motors – 90 VDC or 180 VDC where applicable, for specific motor manufacturers and 5 digit item code ref. pages 340, 346 and 347.
Overhung Load Ratings refer to Pages 277.

@ 1750 RPM Input

FOR RATINGS AT OTHER INPUT SPEEDS, SEE TABLES ON PAGES 291-296.
ORDER BY CATALOG NUMBER OR ITEM CODE.

Output RPM	Ratio*	Non-Flanged Reducers				Flanged Reducers (Gearmotors)					AC Motors†	DC Motors††
		Gear Capacity			Catalog No. (Item Code)	Ratings			Catalog Numbers (Item Code)			
		Output Torque (LB-IN.)	HP			Motor HP	Output Torque (LB-IN.)	S.C.**	Foot Mounted	Output Flange Mounted		
			Input	Output								
22 (Cont)	80	6100	2.2	2.07	643B-80 (28788)	2 1.5	5473 4104	I II	F643B-80-B7 (28789)	F643BF-80-B7 (28790)	KUTF JUTF	PM18200 PM18150
						1	2736	III	F643B-80-B5 (28791)	F643BF-80-B5 (28792)	HUTF-5/8	PM9100-5/8 PM18100-5/8
		14152	5.2	4.89	653B-80 (28793)	5 3	13558 8135	I II	F653B-80-B9 (28794)	F653BF-80-B9 (28796)	MUTF LUTF	PM18500 PM18300
						2	5423	III	F653B-80-B7 (28797)	F653BF-80-B7 (28798)	KUTF	PM18200
		25562	9.74	9.16	663B-80 (28799)	7.5	19604	I	F663B-80-B11 (28800)	F663BF-80-B11 (28801)	MUTF	PM18500
						5	13069	III	F663B-80-B9 (28802)	F663BF-80-B9 (28803)	LUTF	PM18300
18	100	1618	.48	0.45	623B-100 (28804)	.33 .25	1110 841	I III	F623B-100-B5 (28805)	F623BF-100-B5 (28806)	EUTF DUTF	PM933 PM925
		4038	1.21	1.14	633B-100 (28808)	1 .75 .5	3324 2493 1662	I II III	F633B-100-B5 (28809)	F633BF-100-B5 (28810)	HUTF-5/8 GUTF FUTF	PM9100-5/8 PM18100-5/8 PM975/PM1875 PM950
		6100	1.78	1.67	643B-100 (28811)	1.5	5133	I	F643B-100-B7 (28812)	F643BF-100-B7 (28813)	JUTF	PM18150
						1 .75	3422 2567	II III	F643B-100-B5 (28814)	F643BF-100-B5 (28815)	HUTF-5/8 GUTF	PM9100-5/8 PM18100-5/8 PM975 PM1875
		14222	4.04	3.80	653B-100 (28816)	2 1.5	7008 5256	I II	F653B-100-B7 (28817)	F653BF-100-B7 (28818)	KUTF JUTF	PM18200 PM18150
						1	3504	III	F653B-100-B5 (28819)	F653BF-100-B5 (28820)	HUTF-5/8	PM9100-5/8 PM18100-5/8
		26602	8.03	7.55	663B-100 (28821)	7.5	24753	I	F663B-100-B11 (28822)	F663BF-100-B11 (28823)	NUTF	—
						5 3	16502 9901	II III	F663B-100-B9 (28824)	F663BF-100-B9 (28825)	MUTF LUTF	PM18500 PM18300
14	125	1744	.41	0.39	623B-125 (28826)	.33 .25	1389 1052	I II	F623B-125-B5 (28827)	F623BF-125-B5 (28828)	EUTF DUTF	PM933 PM925

* Gear Ratio is Approximate. For Actual Gear Ratio Reference Page 291-296.
** Class I (S.F. = 1.00) Class II (S.F. = 1.50) Class III (S.F. = 2.00)
† AC Motors – 230/460-3-60 TEFC, for specific motor manufacturers and 5 digit item code refer to pages 343-345.
†† DC Motors – 90 VDC or 180 VDC where applicable, for specific motor manufacturers and 5 digit item code ref. pages 340, 346 and 347.
Overhung Load Ratings refer to Pages 277.

600 Series Output RPM and Capacity Selection Tables

@ 1750 RPM Input

K

FOR RATINGS AT OTHER INPUT SPEEDS, SEE TABLES ON PAGES 291-296.
ORDER BY CATALOG NUMBER OR ITEM CODE.

Output RPM	Ratio*	Non-Flanged Reducers				Flanged Reducers (Gearmotors)					AC Motors†	DC Motors††
		Gear Capacity			Catalog No. (Item Code)	Ratings			Catalog Numbers (Item Code)			
		Output Torque (LB-IN.)	HP			Motor HP	Output Torque (LB-IN.)	S.C.**	Foot Mounted	Output Flange Mounted		
			Input	Output								
14	125	4038	.97	0.91	633B-125 (28829)	.75 .5 .33	3121 2080 1373	I II III	F633B-125-B5 (28830)	F633BF-125-B5 (28831)	GUTF FUTF EUTF	PM975 PM1875 PM950 PM933
		6100	1.45	1.36	643B-125 (28832)	1 .75 .5	4214 3161 2107	I II III	F643B-125-B5 (28833)	F643BF-125-B5 (28834)	HUTF-5/8 GUTF FUTF	PM9100-5/8 PM18100-5/8 PM975 PM1875 PM950
		14277	3.25	3.06	653B-125 (28835)	3 2	13125 8750	I II	F653B-125-B9 (28836)	F653BF-125-B9 (28839)	LUTF KUTF	PM18300 PM18200
						1.5	6562	III	F653B-125-B7 (28840)	F653BF-125-B7 (28841)	JUTF	PM18150
		27049	6.52	6.13	663B-125 (28842)	5	20653	II	F663B-125-B9 (28843)	F663BF-125-B9 (28844)	MUTF	PM18500
						3	12392	III	F663B-125-B7 (28845)	F663BF-125-B7 (28846)	LUTF	PM18300
11	160	6100	1.10	1.03	643B-160 (28847)	1 .75 .5	5485 4114 2743	I II III	F643B-160-B5 (28848)	F643BF-160-B5 (28849)	HUTF-5/8 GUTF FUTF	PM9100-5/8 PM18100-5/8 PM975 PM1875 PM950
		14317	2.72	2.56	653B-160 (28850)	2 1.5	10489 7867	I II	F653B-160-B7 (28851)	F653BF-160-B7 (28853)	KUTF JUTF	PM18200 PM18150
						1	5245	III	F653B-160-B5 (28854)	F653BF-160-B5 (28855)	HUTF-5/8	PM9100-5/8 PM18100-5/8
		27173	5.03	4.73	663B-160 (28856)	5 3	26881 16128	I II	F663B-160-B9 (28857)	F663BF-160-B9 (28858)	MUTF LUTF	PM18500 PM18300
						2	10752	III	F663B-160-B7 (28859)	F663BF-160-B7 (28860)	KUTF	PM18200

* Gear Ratio is Approximate. For Actual Gear Ratio Reference Page 291-296.
** Class I (S.F. = 1.00) Class II (S.F. = 1.50) Class III (S.F. = 2.00)
† AC Motors – 230/460-3-60 TEFC, for specific motor manufacturers and 5 digit item code refer to pages 343-345.
†† DC Motors – 90 VDC or 180 VDC where applicable, for specific motor manufacturers and 5 digit item code ref. pages 340, 346 and 347.
Overhung Load Ratings refer to Pages 277.

Non-Flanged Reducers; Input Speeds 1750 and 1160 RPM

Service Factor 1.0*

Catalog Number†	Item Code	Input Speed						Gear Ratio††
		1750 RPM			1160 RPM			
		Approx. Output RPM	Output Torque (LB-IN)(Max.)	Input HP (Max.)	Approx. Output RPM	Output Torque (LB-IN) (Max.)	Input HP (Max.)	
621B-1.6	28000	1094	338	6.15	725	399	4.8	1.56
631B-1.6	28005	1094	623	11.39	725	708	8.58	1.55
641B-1.6	28010	1094	761	13.43	725	897	10.49	1.61
651B-1.6	28015	1094	2292	41.74	725	2378	28.7	1.56
661B-1.6	28017	1094	3230	57.18	725	3677	43.14	1.6
611C-2	28019	875	212	3.06	580	212	2.03	1.96
621B-2	28022	875	399	5.65	580	442	4.14	2
631B-2	28027	875	708	10.35	580	708	6.86	1.94
641B-2	28032	875	1030	14.33	580	1214	11.2	2.04
651B-2	28037	875	2521	36.29	580	2610	24.9	1.97
661B-2	28039	875	3735	52.88	580	4256	39.95	2
611C-2.5	28041	700	275	3.06	464	276	2.03	2.55
621B-2.5	28044	700	442	4.86	464	442	3.22	2.58
631B-2.5	28049	700	708	7.88	464	708	5.22	2.55
641B-2.5	28054	700	1273	13.96	464	1327	9.65	2.58
651B-2.5	28059	700	2745	30.62	464	2835	20.96	2.54
661B-2.5	28062	700	4152	48.17	464	4731	36.38	2.44
611C-3.2	28064	557	340	2.98	368	348	2.02	3.24
621B-3.2	28067	557	442	3.86	368	442	2.56	3.25
631B-3.2	28073	557	708	6.50	368	708	4.31	3.09
641B-3.2	28076	557	1127	10.10	368	1327	7.89	3.16
651B-3.2	28081	557	2894	25.76	368	2903	17.13	3.18
661B-3.2	28086	557	4655	42.96	368	5221	31.94	3.07
611C-4	28088	438	372	2.58	290	380	1.75	4.08
621B-4	28093	438	442	3.19	290	442	2.11	3.93
631B-4	28098	438	708	5.15	290	708	3.41	3.89
641B-4	28108	438	1315	9.42	290	1327	6.31	3.95
651B-4	28113	438	2903	20	290	2903	13.26	4.11
661B-4	28119	438	5221	38.16	290	5221	25.3	3.88
611C-5	28121	350	192	1.05	230	179	0.65	5.17
621B-5	28124	350	442	2.55	230	442	1.69	4.92
631B-5	28129	350	708	4.11	230	708	2.73	4.88
641B-5	28134	350	1327	7.73	230	1327	5.12	4.87
651B-5	28140	350	2903	16.01	230	2903	10.62	5.13
661B-5	28145	350	5221	30.49	230	5221	20.21	4.85
622B-6.3	28147	278	1251	5.63	183	1252	3.73	6.43
632B-6.3	28152	278	2208	10.45	183	2208	6.92	6.1
642B-6.3	28157	278	3615	16.28	183	3615	10.79	6.41
652B-6.3	28162	278	7883	36.83	183	8159	25.13	6.21
662B-6.3	28164	278	11903	53.87	183	12354	37.06	6.38

* For applications requiring a service factor greater than 1.0, multiply the design torque or horsepower by the application factor, found on pages 354-355, before selection.

† Reducer dimensions can be found on pages 297-302.

†† Gear Ratio is the actual ratio rounded to the nearest hundredth.

Non-Flanged Reducers; Input Speeds 690 and 100 RPM

Service Factor 1.0*

K

Catalog Number†	Item Code	Input Speed						Gear Ratio††
		690 RPM			100 RPM			
		Approx. Output RPM	Output Torque (LB-IN)(Max.)	Input HP (Max.)	Approx. Output RPM	Output Torque (LB-IN) (Max.)	Input HP (Max.)	
621B-1.6	28000	431	425	3.04	63	425	0.44	1.56
631B-1.6	28005	431	708	5.10	63	708	0.74	1.55
641B-1.6	28010	431	959	6.65	63	959	0.96	1.61
651B-1.6	28015	431	2411	17.27	63	2411	2.50	1.56
661B-1.6	28017	431	3677	25.67	63	3677	3.72	1.6
611C-2	28019	345	210	1.20	50	210	0.17	1.96
621B-2	28022	345	442	2.47	50	442	0.36	2
631B-2	28027	345	708	4.08	50	708	0.59	1.94
641B-2	28032	345	1327	7.27	50	1327	1.05	2.04
651B-2	28037	345	2870	16.28	50	2870	2.36	1.97
661B-2	28039	345	4731	26.43	50	4731	3.83	2
611C-2.5	28041	276	276	1.21	40	276	0.18	2.55
621B-2.5	28044	276	442	1.91	40	442	0.28	2.58
631B-2.5	28049	276	708	3.10	40	708	0.45	2.55
641B-2.5	28054	276	1327	5.75	40	1327	0.83	2.58
651B-2.5	28059	276	2870	12.62	40	2870	1.83	2.54
661B-2.5	28062	276	4731	21.66	40	4731	3.14	2.44
611C-3.2	28064	240	350	1.21	31	350	0.17	3.24
621B-3.2	28067	216	442	1.52	31	442	0.22	3.25
631B-3.2	28073	216	708	2.56	31	708	0.37	3.09
641B-3.2	28076	216	1327	4.69	31	1327	0.68	3.16
651B-3.2	28081	216	2903	10.20	31	2903	1.48	3.18
661B-3.2	28086	216	5221	19.00	31	5221	2.75	3.07
611C-4	28088	173	375	1.03	25	375	0.15	4.08
621B-4	28093	173	442	1.26	25	442	0.18	3.93
631B-4	28098	173	708	2.03	25	708	0.29	3.89
641B-4	28108	173	1327	3.75	25	1327	0.54	3.95
651B-4	28113	173	2903	7.89	25	2903	1.14	4.11
661B-4	28119	173	5221	15.03	25	5221	2.18	3.88
611C-5	28121	138	178	0.38	20	178	0.06	5.17
621B-5	28124	138	442	1.00	20	442	0.15	4.92
631B-5	28129	138	708	1.62	20	708	0.23	4.88
641B-5	28134	138	1327	3.04	20	1327	0.44	4.87
651B-5	28140	138	2903	6.32	20	2903	0.92	5.13
661B-5	28145	138	5221	12.03	20	5221	1.74	4.85
622B-6.3	28147	110	1252	2.22	16	1252	0.32	6.43
632B-6.3	28152	110	2208	4.13	16	2208	0.60	6.1
642B-6.3	28157	110	3615	6.43	16	3615	0.93	6.41
652B-6.3	28162	110	8267	15.18	16	8267	2.20	6.21
662B-6.3	28164	110	12531	22.40	16	12531	3.25	6.38

* For applications requiring a service factor greater than 1.0, multiply the design torque or horsepower by the application factor, found on pages 354-355, before selection.

† Reducer dimensions can be found on pages 297-302.

†† Gear Ratio is the actual ratio rounded to the nearest hundredth.

Non-Flanged Reducers; Input Speeds 1750 and 1160 RPM

Service Factor 1.0*

Catalog Number†	Item Code	Input Speed						Gear Ratio††
		1750 RPM			1160 RPM			
		Approx. Output RPM	Output Torque (LB-IN)(Max.)	Input HP (Max.)	Approx. Output RPM	Output Torque (LB-IN) (Max.)	Input HP (Max.)	
612C-8	28166	219	762	2.69	144	775	1.82	8.16
622B-8	28171	219	1252	4.37	144	1252	2.89	8.28
632B-8	28176	219	2208	7.95	144	2208	5.27	8.02
642B-8	28181	219	3615	12.83	144	3615	8.5	8.14
652B-8	28186	219	10329	38.77	144	10729	26.69	7.69
662B-8	28188	219	18252	66.63	144	18254	44.17	7.92
612C-10	28190	175	768	2.17	115	777	1.46	10.2
622B-10	28195	175	1252	3.46	115	1252	2.3	10.43
632B-10	28201	175	2208	6.56	115	2208	4.35	9.72
642B-10	28204	175	3615	10.49	115	3615	6.95	9.95
652B-10	28209	175	11933	35.65	115	13476	26.68	9.67
662B-10	28211	175	20956	60.86	115	22907	44.17	9.94
612C-12.5	28213	140	772	1.82	92	776	1.22	12.23
622B-12.5	28218	140	1252	2.87	92	1252	1.9	12.61
632B-12.5	28223	140	2208	5.2	92	2208	3.44	12.27
642B-12.5	28228	140	3615	8.39	92	3615	5.56	12.45
652B-12.5	28232	140	12844	30.33	92	13603	21.29	12.23
662B-12.5	28235	140	23128	47.77	92	24062	37.06	12.43
612C-16	28251	109	777	1.46	72	785	0.98	15.35
622B-16	28256	109	1252	2.29	72	1252	1.52	15.79
632B-16	28291	109	2208	4.15	72	2208	2.75	15.36
642B-16	28330	109	3615	6.81	72	3615	4.51	15.33
652B-16	28366	109	13452	24.63	72	13728	16.66	15.77
662B-16	28390	109	23788	45.28	72	25221	31.82	15.17
612C-20	28396	88	783	1.12	58	792	0.75	20.24
622B-20	28570	88	1252	1.8	58	1252	1.19	20.07
632B-20	28589	88	2208	3.21	58	2208	2.13	19.87
642B-20	28594	88	3615	6	58	3615	3.47	17.33
652B-20	28650	88	13601	19.86	58	13829	13.39	19.77
662B-20	28654	88	24111	36.51	58	24929	25.02	19.07
612C-25	28656	70	787	0.89	46	787	0.59	25.59
622B-25	28659	70	877	1	46	867	0.65	25.39
632B-25	28663	70	2208	2.51	46	2208	1.66	25.44
642B-25	28668	70	3615	4.23	46	3615	2.8	24.68
652B-25	28674	70	13727	15.52	46	13932	10.44	25.55
662B-25	28679	70	25876	31.03	46	26310	20.91	24.08

* For applications requiring a service factor greater than 1.0, multiply the design torque or horsepower by the application factor, found on pages 354-355, before selection.

† Reducer dimensions can be found on pages 297-302.

†† Gear Ratio is the actual ratio rounded to the nearest hundredth.

Non-Flanged Reducers; Input Speeds 690 and 100 RPM

Service Factor 1.0*

K

Catalog Number†	Item Code	Input Speed						Gear Ratio††
		690 RPM			100 RPM			
		Approx. Output RPM	Output Torque (LB-IN)(Max.)	Input HP (Max.)	Approx. Output RPM	Output Torque (LB-IN) (Max.)	Input HP (Max.)	
612C-8	28166	86	779	1.09	13	779	0.16	8.16
622B-8	28171	86	1252	1.72	13	1252	0.25	8.28
632B-8	28176	86	2208	3.14	13	2208	0.46	8.02
642B-8	28181	86	3615	5.06	13	3615	0.73	8.14
652B-8	28186	86	10887	16.15	13	10887	2.34	7.69
662B-8	28188	86	18250	26.28	13	18250	3.81	7.92
612C-10	28190	69	783	0.88	10	783	0.13	10.2
622B-10	28195	69	1252	1.37	10	1252	0.20	10.43
632B-10	28201	69	2208	2.59	10	2208	0.38	9.72
642B-10	28204	69	3615	4.14	10	3615	0.60	9.95
652B-10	28209	69	13589	16.03	10	13589	2.32	9.67
662B-10	28211	69	22902	26.28	10	22902	3.81	9.94
612C-12.5	28213	55	786	0.73	8	786	0.11	12.23
622B-12.5	28218	55	1252	1.13	8	1252	0.16	12.61
632B-12.5	28223	55	2208	2.05	8	2208	0.30	12.27
642B-12.5	28228	55	3615	3.31	8	3615	0.48	12.45
652B-12.5	28232	55	13706	12.78	8	13706	1.85	12.23
662B-12.5	28235	55	24410	22.40	8	24410	3.25	12.43
612C-16	28251	43	790	0.59	6	790	0.09	15.35
622B-16	28256	43	1252	0.90	6	1252	0.13	15.79
632B-16	28291	43	2208	1.64	6	2208	0.24	15.36
642B-16	28330	43	3615	2.69	6	3615	0.39	15.33
652B-16	28366	43	13821	9.99	6	13821	1.45	15.77
662B-16	28390	43	25563	19.22	6	25563	2.79	15.17
612C-20	28396	35	794	0.45	5	794	0.06	20.24
622B-20	28570	35	1252	0.71	5	1252	0.10	20.07
632B-20	28589	35	2208	1.27	5	2208	0.18	19.87
642B-20	28594	35	3615	2.38	5	3615	0.34	17.33
652B-20	28650	35	13914	8.03	5	13914	1.16	19.77
662B-20	28654	35	25248	15.10	5	25248	2.19	19.07
612C-25	28656	28	798	0.36	4	798	0.05	25.59
622B-25	28659	28	861	0.39	4	861	0.06	25.39
632B-25	28663	28	2208	0.99	4	2208	0.14	25.44
642B-25	28668	28	3615	1.67	4	3615	0.24	24.68
652B-25	28674	28	14008	6.25	4	14008	0.91	25.55
662B-25	28679	28	26475	12.54	4	26475	1.82	24.08

* For applications requiring a service factor greater than 1.0, multiply the design torque or horsepower by the application factor, found on pages 354-355, before selection.

† Reducer dimensions can be found on pages 297-302.

†† Gear Ratio is the actual ratio rounded to the nearest hundredth.

Non-Flanged Reducers; Input Speeds 1750 and 1160 RPM

Service Factor 1.0*

Catalog Number†	Item Code	Input Speed						Gear Ratio††
		1750 RPM			1160 RPM			
		Approx. Output RPM	Output Torque (LB-IN)(Max.)	Input HP (Max.)	Approx. Output RPM	Output Torque (LB-IN) (Max.)	Input HP (Max.)	
612C-32	28682	55	791	0.7	36	821	.42	33.48
622B-32	28685	55	1780	1.68	36	1799	1.13	30.55
632B-32	28690	55	3977	3.79	36	4023	2.54	30.29
642B-32	28695	55	5910	5.4	36	6416	3.93	32.32
652B-32	28698	55	13826	12.52	36	14014	8.41	31.9
662B-32	28703	55	26088	25	36	26487	16.82	30.14
612C-40	28707	44	794	0.57	29	799	0.38	40.32
622B-40	28710	44	1790	1.33	29	1804	0.89	38.84
632B-40	28713	44	4002	2.95	29	4038	1.97	39.2
643B-40	28716	44	6010	4.3	29	6100	2.9	41.1
652B-40	28721	44	13901	10.5	29	14074	7.04	38.24
662B-40	28726	44	26314	19.37	29	26673	13.02	39.23
613C-50	28730	35	796	0.45	23	803	0.32	49.16
622B-50	28733	35	1699	1	23	1666	0.65	49.15
632B-50	28736	35	4024	2.32	23	4038	1.54	50.19
643B-50	28742	35	6100	3.46	23	6100	2.29	52.09
652B-50	28747	35	14004	8.03	23	14158	5.38	50.34
662B-50	28752	35	26496	15.39	23	26823	10.33	49.71
613C-63	28756	28	800	0.4	18	785	0.24	64.07
623B-63	28759	28	1406	0.63	18	1657	0.5	65.25
633B-63	28762	28	4038	1.85	18	4038	1.23	64.2
643B-63	28767	28	6100	2.73	18	6100	1.9	66.11
653B-63	28772	28	14084	6.48	18	14223	4.34	63.93
663B-63	28775	28	23239	11.13	18	26947	8.56	61.44
623B-80	28780	22	1519	0.54	14	1790	0.42	81.29
633B-80	28783	22	4038	1.53	14	4038	1.01	77.86
643B-80	28788	22	6100	2.2	14	6100	1.52	80.86
653B-80	28793	22	14152	5.2	14	14278	3.48	80.13
663B-80	28799	22	25562	9.74	14	27062	6.84	77.24
623B-100	28804	18	1618	0.48	12	1804	0.35	99.4
633B-100	28808	18	4038	1.21	12	4038	0.8	98.24
643B-100	28811	18	6100	1.78	12	6100	1.23	101.13
653B-100	28816	18	14222	4.04	12	14334	2.7	103.54
663B-100	28821	18	26602	8.03	12	27177	5.44	97.53
623B-125	28826	14	1744	0.41	9	1804	0.28	124.4
633B-125	28829	14	4038	0.97	9	4038	0.64	122.96
643B-125	28832	14	6100	1.45	9	6100	0.96	124.53
653B-125	28835	14	14277	3.25	9	14378	2.17	129.28
663B-125	28842	14	27049	6.52	9	27265	4.36	122.06
643B-160	28847	11	6100	1.1	7	6100	0.77	162.1
653B-160	28850	11	14317	2.72	7	14410	1.81	154.98
663B-160	28856	11	27173	5.03	7	27372	3.36	158.87

* For applications requiring a service factor greater than 1.0, multiply the design torque or horsepower by the application factor, found on pages 354-355, before selection.

† Reducer dimensions can be found on pages 297-302.

†† Gear Ratio is the actual ratio rounded to the nearest hundredth.

Non-Flanged Reducers; Input Speeds 690 and 100 RPM

Service Factor 1.0*

K

Catalog Number†	Item Code	Input Speed						Gear Ratio††
		690 RPM			100 RPM			
		Approx. Output RPM	Output Torque (LB-IN)(Max.)	Input HP (Max.)	Approx. Output RPM	Output Torque (LB-IN) (Max.)	Input HP (Max.)	
612C-32	28682	22	800	0.27	3	800	0.04	33.48
623B-32	28685	22	1804	0.67	3	1804	0.10	30.55
633B-32	28690	22	4023	1.51	3	4023	0.22	30.29
642B-32	28695	22	6100	2.15	3	6100	0.31	32.32
652B-32	28698	22	14083	5.03	3	14083	0.73	31.9
662B-32	28703	22	26634	10.08	3	26634	1.46	30.14
613C-40	28707	17	800	0.23	2.5	800	0.03	40.32
623B-40	28710	17	1804	0.54	2.5	1804	0.08	38.84
633B-40	28713	17	4038	1.20	2.5	4038	0.17	39.2
643B-40	28716	17	6100	1.73	2.5	6100	0.25	41.1
653B-40	28721	17	14138	4.31	2.5	14138	0.62	38.24
663B-40	28726	17	26802	7.96	2.5	26802	1.15	39.23
613C-50	28730	14	796	0.19	2	796	0.03	49.16
623B-50	28733	14	1804	0.43	2	1804	0.06	49.15
633B-50	28736	14	4038	0.94	2	4038	0.14	50.19
643B-50	28742	14	6100	1.36	2	6100	0.20	52.09
653B-50	28747	14	14215	3.29	2	14215	0.48	50.34
663B-50	28752	14	26941	6.31	2	26941	0.91	49.71
613C-63	28756	11	800	0.15	1.6	800	0.02	64.07
623B-63	28759	11	1804	0.32	1.6	1804	0.05	65.25
633B-63	28762	11	4038	0.73	1.6	4038	0.11	64.2
643B-63	28767	11	6100	1.07	1.6	6100	0.16	66.11
653B-63	28772	11	14274	2.60	1.6	14274	0.38	63.93
663B-63	28775	11	27053	5.13	1.6	27053	0.74	61.44
623B-80	28780	9	1804	0.26	1.3	1804	0.04	81.29
633B-80	28783	9	4038	0.60	1.3	4038	0.09	77.86
643B-80	28788	9	6100	0.88	1.3	6100	0.13	80.86
653B-80	28793	9	14324	2.08	1.3	14324	0.30	80.13
663B-80	28799	9	27162	4.10	1.3	27162	0.59	77.24
623B-100	28804	7	1804	0.21	1	1804	0.03	99.4
633B-100	28808	7	4038	0.48	1	4038	0.07	98.24
643B-100	28811	7	6100	0.70	1	6100	0.10	101.13
653B-100	28816	7	14375	1.62	1	14375	0.23	103.54
663B-100	28821	7	27260	3.26	1	27260	0.47	97.53
623B-125	28826	6	1380	0.13	0.8	1380	0.02	124.4
633B-125	28829	6	4038	0.38	0.8	4038	0.06	122.96
643B-125	28832	6	6100	0.57	0.8	6100	0.08	124.53
653B-125	28835	6	14415	1.30	0.8	14415	0.19	129.28
663B-125	28842	6	27348	2.61	0.8	27348	0.38	122.06
643B-160	28847	4	6100	0.44	0.6	6100	0.06	162.1
653B-160	28850	4	14444	1.09	0.6	14444	0.16	154.98
663B-160	28856	4	27442	2.01	0.6	27442	0.29	158.87

* For applications requiring a service factor greater than 1.0, multiply the design torque or horsepower by the application factor, found on pages 354-355, before selection.

† Reducer dimensions can be found on pages 297-302.

†† Gear Ratio is the actual ratio rounded to the nearest hundredth.

F600B Series – Flanged Quill Type

Foot Mounted

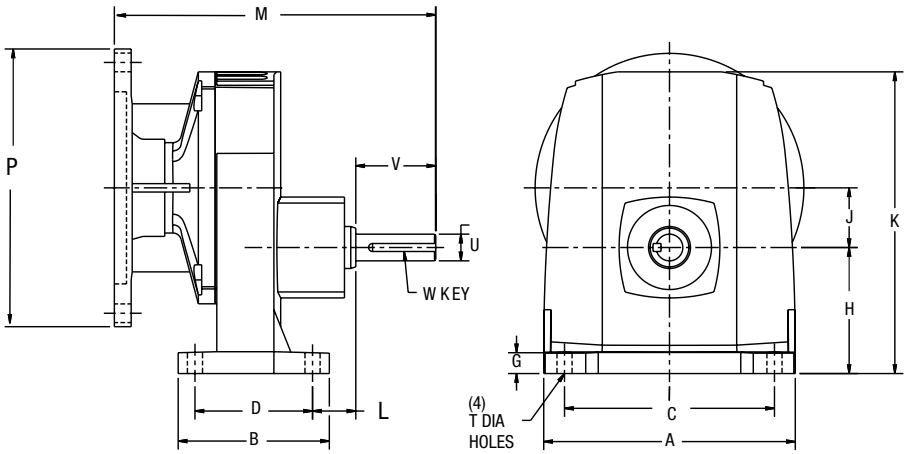

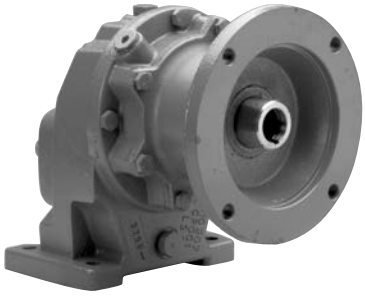

Size	A	B	C	D	G	H	J	K	L
611C	5.90	3.54	4.92	2.76	.48	2.95	1.40	7.07	1.01
621B	6.14	4.13	4.72	2.95	.71	3.15	1.83	8.24	.71
631B	7.08	4.48	5.52	3.15	.77	3.54	2.48	9.76	.75
641B	9.69	5.30	7.48	3.94	1.00	4.41	2.76	11.69	1.08
651B	11.02	6.59	8.50	4.92	1.33	5.20	3.43	13.90	1.10
661B	13.65	7.76	10.24	6.30	1.71	6.30	4.33	17.36	1.18

	M						Low Speed Shaft				
	NEMA Mounting								W-Key		Approx. Weight (lb.)
	B5	B7	B9	B11	B13	T	*U	V	Sq.	Length	
Size	56C	140TC	180TC	210TC	250TC						
611C	8.50	8.50	– –	– –	– –	.35	.625	1.88	3/16	1.48	11
621B	10.43	10.43	12.15	– –	– –	.43	.750	1.50	3/16	1.28	30
631B	11.05	11.05	12.77	12.77	– –	.55	1.000	2.00	1/4	1.56	40
641B	– –	– –	14.17	14.17	– –	.63	1.375	2.75	5/16	2.40	62
651B	– –	– –	– –	15.54	16.75	.71	1.500	3.00	3/8	2.56	68
661B	– –	– –	– –	– –	17.48	.79	1.750	3.50	3/8	3.06	89
P	9.00	9.00	9.00								

Output shaft rotation is opposite input shaft rotation.

* Shaft extension tolerance: +.0000"; -.0005" up to 1.5" diameter inclusive. Larger diameters: +.000; -.001".

Dimensions to rough casting are approximate.

F600B Series – Flanged Quill Type

Foot Mounted

K

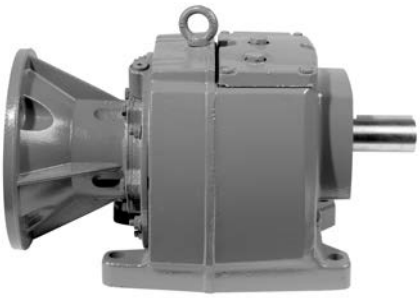

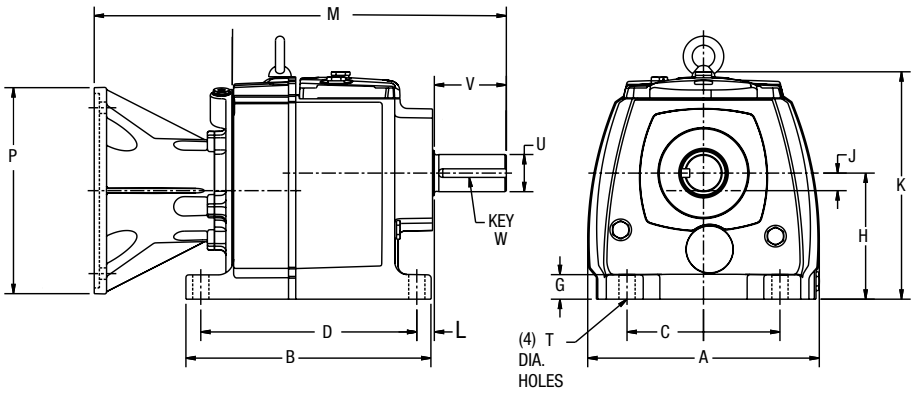

Size	A	B	C	D	G	H	J	K	L
612C/613C	5.90	4.92/5.71	4.92	4.13/4.92	.48	2.95	.28*	6.00	.87
622B/623B	6.76	7.68	4.33	6.50	.71	3.54	.33	6.60	.59
632B/633B	8.72	8.50	5.32	7.56	.84	4.53	.39	7.97	.51
642B/643B	10.13	10.72	6.68	9.45	1.07	5.51	.77	9.94	.77
652B/653B	12.00	10.86	9.06	9.25	1.37	7.09	1.02	11.89	.98
662B/663B	14.19	12.89	11.02	11.02	1.73	8.86	1.14	14.84	1.10

* 612/613 Only "J" is Higher than "H".

	M					T	Low Speed Shaft				Approx. Weight (lb.)
	NEMA Mounting								W-Key		
	B5	B7	B9	B11	B13		*U	V			
Size	56C	140TC	180TC	210TC	250TC				Sq.	Length	
612C/613C	9.29/10.08	– –	– –	– –	– –	.35	.750	1.75	3/16	1.48	17
622B/623B	13.00	13.00	14.72	– –	– –	.35	1.000	2.00	1/4	1.56	45
632B/633B	14.17	14.17	15.89	15.89	– –	.55	1.250	2.50	1/4	2.16	61
642B/643B	16.31	16.31	18.03	18.03	18.66	.71	1.500	3.00	3/8	2.56	90
652B/653B	17.88	17.88	19.60	19.60	20.81	.71	2.125	3.50	1/2	3.06	95
662B/663B	– –	20.29	22.01	22.01	23.24	.87	2.375	4.72	5/8	4.19	165
P	6.50	6.50	9.00	9.00	9.00						

Output shaft rotation, relative to input shaft rotation, is identical for double reduction and opposite for triple reduction reducers.

* Shaft extension tolerance: +.0000"; -.0005" up to 1.5" diameter inclusive. Larger diameters: +.000; -.001".

Dimensions to rough casting are approximate.

F600B Series – Flanged Quill Type

Output Flange Mounted

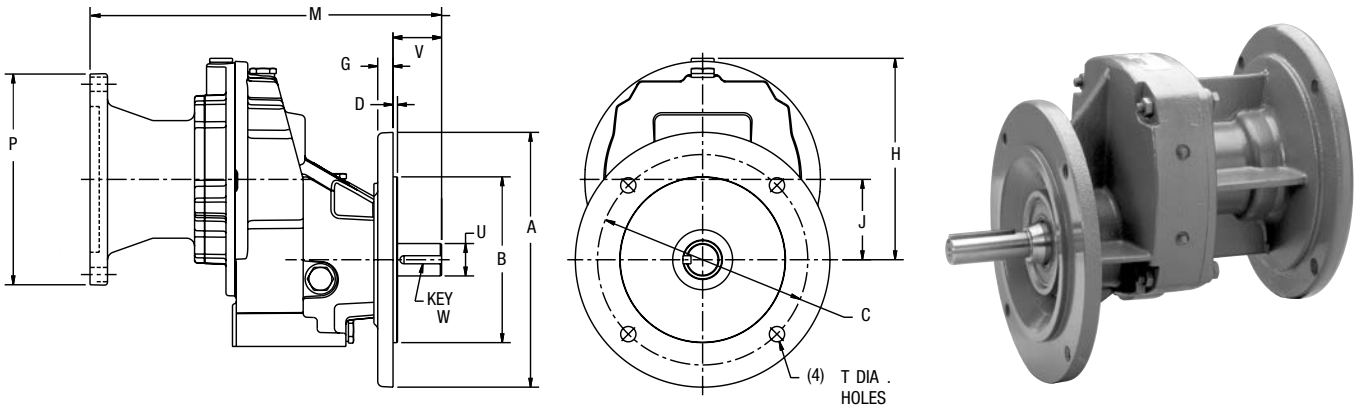

Size	A	B	C	D	G	H	J
611CF*	6.50	4.50	5.88	.12	.39	4.65	1.40
621BF	6.30	4.33	5.12	.14	.39	4.82	1.83
631BF	7.87	5.12	6.50	.14	.47	6.22	2.48
641BF	9.83	7.09	8.46	.16	.47	7.28	2.76
651BF	11.80	9.06	10.43	.16	.59	8.70	3.43

* Output flange to NEMA 56C dimensions. (611CF only)

	M					Low Speed Shaft				
	NEMA Mounting									
	B5	B7	B9	B11				W-Key		Approx. Weight (lb.)
Size	56C	140TC	180TC	210TC	T	*U	V	Sq.	Length	
611CF	8.51	8.51	– –	– –	3/8-16 UNC	.625	2.06	3/16	1.48	13
621BF	10.74	10.74	12.46	– –	.35	.750	1.50	3/16	1.28	33
631BF	10.86	10.86	12.58	12.58	.47	1.000	1.50	1/4	1.16	44
641BF	– –	– –	14.56	14.56	.55	1.375	2.75	5/16	2.40	68
651BF	– –	– –	– –	16.31	.55	1.500	3.00	3/8	2.56	76
P	6.50	6.50	9.00	9.00						

Output shaft rotation is opposite input shaft rotation.

* Shaft extension tolerance: +.0000"; -.0005" up to 1.5" diameter inclusive. Larger diameters: +.000; -.001".

Dimensions to rough casting are approximate.

F600B Series – Flanged Quill Type

Output Flange Mounted



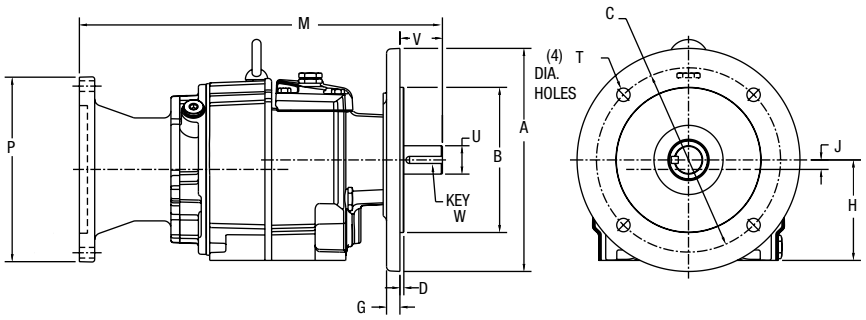

Size	A	B	C	D	G	H	J
612CF/613CF*	6.50	4.50	5.88	.12	.39	2.48	.28‡
622BF/623BF	7.87	5.12	6.50	.14	.47	3.54	.33
632BF/633BF	9.83	7.09	8.46	.16	.47	4.53	.39
642BF/643BF	11.80	9.06	10.43	.16	.47	5.51	.77
652BF/653BF	13.77	9.84	11.81	.16	.59	7.09	1.02
662BF/663BF	15.75	11.81	13.78	.20	.71	8.86	1.14

* Output flange to NEMA 56C dimensions. (612CF/613CF only)
‡ 612/613 "J" Is higher than "H"

	M					Low Speed Shaft				Approx. Weight (lb.)
	NEMA Mounting							W-Key		
	B5	B7	B9	B11						
Size	56C	140TC	180TC	210TC	T	*U	V	Sq.	Length	
612CF/613CF	9.60/10.39	9.60/10.39	– –	– –	3/8-16 UNC	.625	2.06	3/16	1.48	18
622BF/623BF	12.81	12.81	14.53	– –	.47	1.000	1.50	1/4	1.16	47
632BF/633BF	14.56	14.56	16.28	16.28	.55	1.250	2.50	1/4	2.16	65
642BF/643BF	17.18	17.18	18.90	18.90	.55	1.500	3.00	3/8	2.56	98
652BF/653BF	18.63	18.63	20.35	20.35	.71	2.125	3.50	1/2	3.06	103
662BF/663BF	– –	21.26	22.99	22.99	.71	2.375	4.72	5/8	4.19	174
P	6.50	6.50	9.00	9.00						

Output shaft rotation, relative to input shaft rotation, is identical for double reduction and opposite for triple reduction reducers.
* Shaft extension tolerance: +.0000"; -.0005" up to 1.5" diameter inclusive. Larger diameters: +.000; -.001".
Dimensions to rough casting are approximate.

600B Series
Foot Mounted

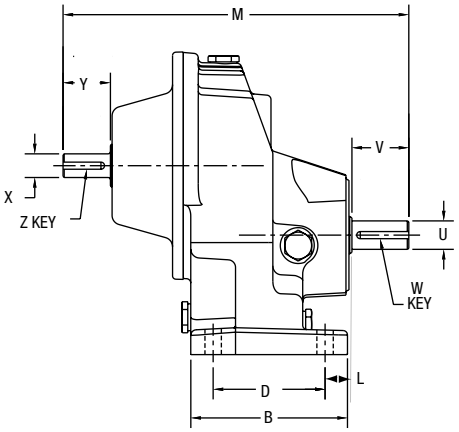

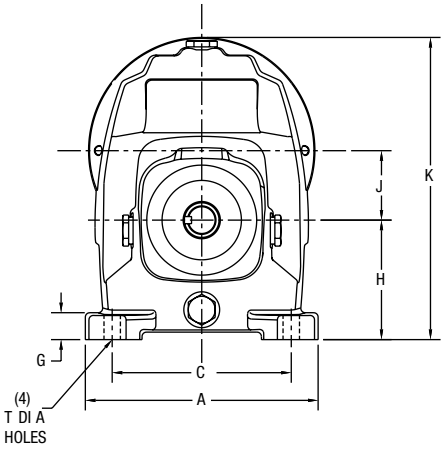

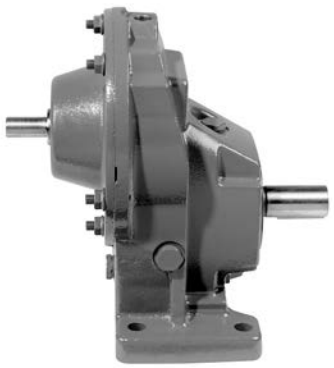

Size	A	B	C	D	G	H	J	K	L	M
611C	5.90	3.54	4.92	2.76	.48	2.95	1.40	7.07	1.01	8.77
621B	6.14	4.13	4.72	2.95	.71	3.15	1.83	7.97	.71	9.12
631B	7.28	4.48	5.52	3.15	.77	3.54	2.48	9.67	.75	9.74
641B	9.69	5.30	7.48	3.94	1.00	4.41	2.76	11.69	1.08	12.88
651B	11.02	6.59	8.50	4.92	1.34	5.20	3.43	13.90	1.10	14.35
661B	13.65	7.76	10.24	6.30	1.61	6.30	4.33	17.37	1.18	16.73

Size	T	Low Speed Shaft				High Speed Shaft				Approx. Weight (lb.)
				W-Key				Z-Key		
		*U	V	Sq.	Length	*X	Y	Sq.	Length	
611C	.35	.625	1.88	3/16	1.48	.500	1.00	9/32 Flat		9
621B	.43	.750	1.50	3/16	1.28	.625	1.25	3/16	1.00	23
631B	.55	1.000	2.00	1/4	1.56	.625	1.25	3/16	1.00	28
641B	.63	1.375	2.75	5/16	2.40	1.125	2.25	1/4	1.94	55
651B	.71	1.500	3.00	3/8	2.56	1.125	2.25	1/4	1.94	66
661B	.79	1.750	3.50	3/8	3.06	1.375	2.75	5/16	2.31	89

Output shaft rotation is opposite input shaft rotation.
* Shaft extension tolerance: +.0000"; -.0005" up to 1.5" diameter inclusive. Larger diameters: +.000; -.001".
Dimensions to rough casting are approximate.

600B Series

Foot Mounted

K



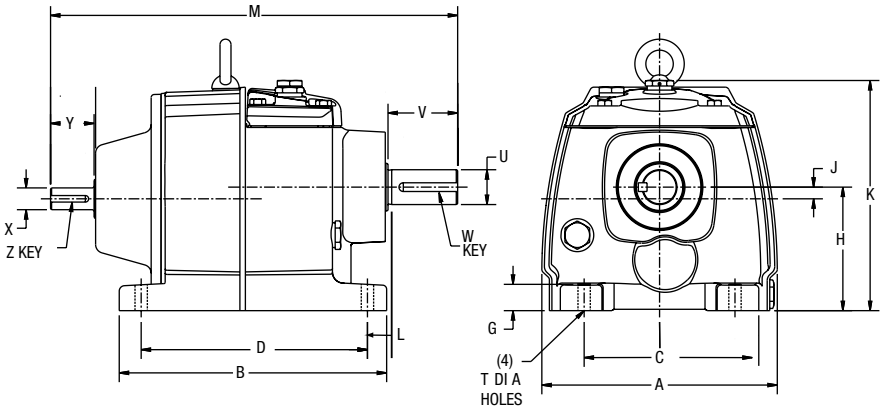

Size	A	B	C	D	G	H	J	K	L	M
612C/613C	5.90	4.92/5.71	4.92	4.13/4.92	.48	2.95	.28*	6.00	.87	9.56/10.35
622B/623B	6.76	7.68	4.33	6.50	.71	3.54	.33	6.60	.59	11.69
632B/633B	8.72	8.50	5.32	7.56	.84	4.53	.39	7.97	.51	12.86
642B/643B	10.13	10.72	6.68	9.45	1.07	5.51	.77	9.94	.77	16.59
652B/653B	12.00	10.86	9.06	9.25	1.37	7.09	1.02	11.89	.98	18.41
662B/663B	14.19	12.89	11.02	11.02	1.73	8.86	1.14	14.84	1.10	22.45

* 612C/613C Only “J” is higher than “H”.

Size	T	Low Speed Shaft				High Speed Shaft				Approx. Weight (lb.)
				W-Key				Z-Key		
		*U	V	Sq.	Length	*X	Y	Sq.	Length	
612C/613C	.35	.750	1.75	3/16	1.48	.500	1.00	9/32 Flat		15
622B/623B	.35	1.000	2.00	1/4	1.56	.625	1.25	3/16	1.00	37
632B/633B	.55	1.250	2.50	1/4	2.16	.625	1.25	3/16	1.00	50
642B/643B	.71	1.500	3.00	3/8	2.56	1.125	2.25	1/4	1.94	87
652B/653B	.71	2.125	3.50	1/2	3.06	1.125	2.25	1/4	1.94	99
662B/663B	.87	2.375	4.72	5/8	4.15	1.375	2.75	5/16	2.31	198

Output shaft rotation, relative to input shaft rotation, is identical for double reduction and opposite for triple reduction reducers.
* Shaft extension tolerance: +.0000"; -.0005" up to 1.5" diameter inclusive. Larger diameters: +.000; -.001".
Dimensions to rough casting are approximate.



600B SERIES – BOST-KLEEN™

- Washable and Scrubbable
- Durable, Non-Absorbent, Non-Toxic White Epoxy Finish, USDA Approved
- Standard NEMA C-Face and Projecting Input Shaft Configurations
- Single, Double and Triple Reducton Rations – 1:6 TO 160:1
- Helical Gearing
- Output Mounting Flange Mount Attachment Available

BISCC Certified Basic Model Numbers, Dimensions and Available Ratios

WHITE BOST-KLEEN		STAINLESS BOST-KLEEN		NEMA Mounting	INPUT SHAFT DIA. +.000 -.001*	OUTPUT SHAFT DIA. +.000 -.001*	AVAILABLE RATIOS
NON-FLANGED TYPE	QUILL TYPE	NON-FLANGED TYPE	QUILL TYPE				
BK611	BKF611	SBK611	SBKF611	56C	.500	.625	ALL
BK621	BKF621	SBK621	SBKF621	56C,140TC,180TC	.625	.750	ALL
BK631	BKF631	SBK631	SBKF631	56C,140TC,180TC,210TC	.625	1.000	ALL
BK641	BKF641	SBK641	SBKF641	140TC,180TC,210TC,250TC	1.125	1.375	ALL
BK651	BKF651	SBK651	SBKF651	180TC,210TC,250TC	1.125	1.500	ALL
BK661	BKF661	SBK661	SBKF661	210TC,250TC	1.375	1.750	ALL
BK612/613	BKF612/613	SBK612/613	SBKF612/613	56C	.500	.625	ALL
BK622/623	BKF622/623	SBK622/623	SBKF622/623	56C,140TC,180TC	.625	1.000	ALL
BK632/633	BKF632/633	SBK632/633	SBKF632/633	56C,140TC,180TC,210TC	.625	1.250	ALL
BK642/643	BKF642/643	SBK642/643	SBKF642/643	56C,140TC,180TC,210TC	1.125	1.500	ALL
BK652/653	BKF652/653	SBK652/653	SBKF652/653	56C,140TC,180TC,210TC	1.125	1.750	ALL
BK662/663	BKF662/663	SBK662/663	SBKF662/663	140TC,180TC,210TC	1.375	2.375	ALL

* Shaft extension tolerance: +.0000"; -.0005" up to 1.5" diameter inclusive. Larger diameters: +.000; -.001".

Notes

K



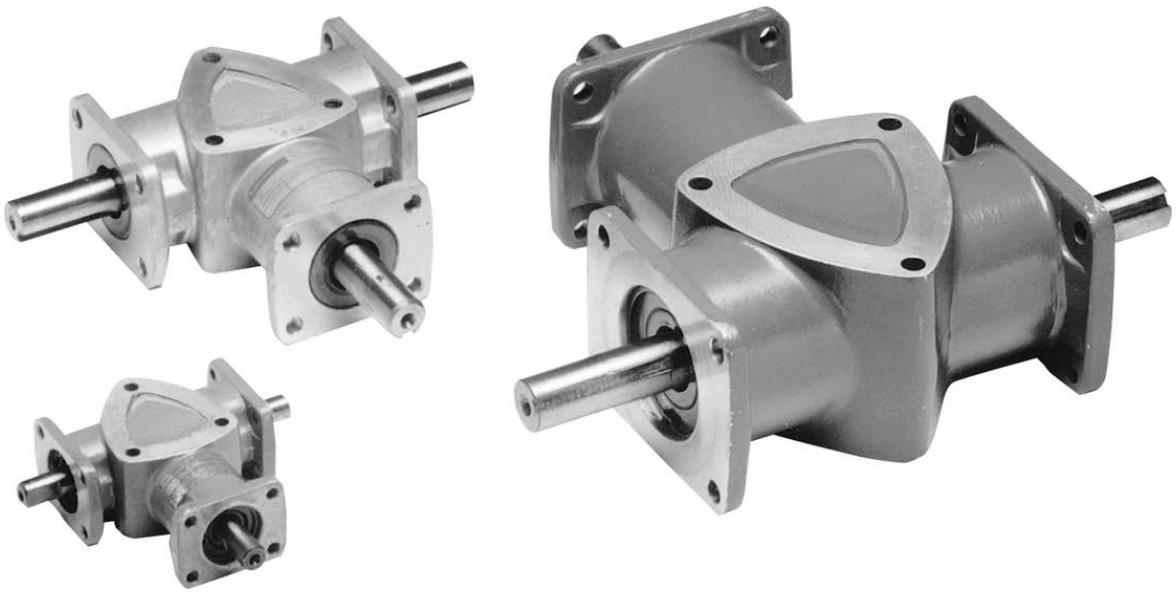

L

Section Contents

Features / How To Order 306

Selection Procedure 306-307

Dimensions 307

Parts List 308

Spiral Bevel Gear

1:1 and 2:1 Ratios

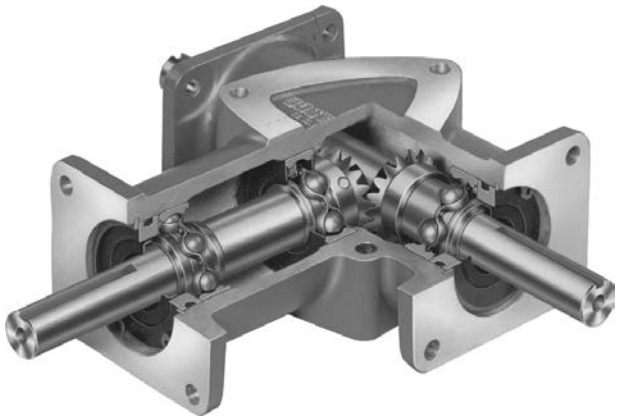

Boston Right-90 Bevel Gear Drives are available with single or double output shaft projections in three sizes with Horsepowers ranging from .13 to 3.5.

Features

- Spiral Bevel Gear Drives are designed for high efficiency, quiet operation and long service life. Gears are made of hardened alloy steel
- Precision ground alloy steel shafts are mounted on precision ball bearings
- Housings are made of aluminum alloy, with all mounting surfaces precision machined
- All shaft projections have high quality oil seals
- **Prelubricated for life**

L

Selection Procedure

Catalog ratings are based on Class I service (uniform—no shock— load, operating no more than 10 hours/day). For applications meeting these conditions selection may be made by comparing the actual load to be transmitted with the appropriate catalog rating. For other conditions selection must be made, based on an equivalent horsepower or torque, obtained by multiplying actual load by the proper service factor.

Selection Procedure:

1. Determine the correct service factor using Applications Classification Chart—Pages 354 & 355. If the application is not listed, obtain service factor from Service Factor Chart, Page 355.
2. Multiply the actual output horsepower or torque by the service factor to obtain the equivalent rating required.
3. Establish input and output speed and/or gear ratio required for the enclosed drive.
4. Selection of all bevel gear drives should be based on Steps 1 through 3 using Selection Chart for desired input and output speeds (including speed increasing drives) that satisfy the required equivalent horsepower or torque.

Reference

Lubrication—Prelubricated for Ambient
Temperature Range of 50° to 125°F.

How to Order

These units may be mounted in any position. When mounting by Flanges only, at least two Flanges must be secured.

TO ORDER: Specify Catalog Number and/or Item Code

EXAMPLE: RA1021 (49420)

Order By Catalog Number or Item Code

2-Way SHAFT		3-Way SHAFT		
Catalog Number	Item Code	Catalog Number	Item Code	Ratios
RA621	49416	RA631	49418	1:1
RA622	49417	RA632	49419	2:1
RA1021	49420	RA1031	49422	1:1
RA1022	49421	RA1032	49423	2:1
RA1521	49424	RA1531	49426	1:1
RA1522	49425	RA1532	49427	2:1

Thrust Load		Overhung Load (No Thrust)
RA6	50 lb max.	25 lb
RA10	100 lb max.	50 lb
RA15	200 lb max.	100 lb

Right-90 Series

BEVEL GEAR - RIGHT ANGLE SELECTION TABLES

(RATINGS FOR SERVICE FACTOR 1.0)

	RATIO	X-SHAFT INPUT RPM	OUTPUT RPM	RA621/631 OUTPUT HP	RA621/631 OUTPUT TORQUE†	RA1021/1031 OUTPUT HP	RA1021/1031 OUTPUT TORQUE†	RA1521/1531 OUTPUT HP	RA1521/1531 OUTPUT TORQUE†
	1:1	1750	1750	.91	31.1	2.19	74.9	3.5	125
		1150	1150	.61	31.8	1.47	76.5	2.5	135
		690	690	.37	32.1	0.9	78.1	1.6	142
		100	100	.06	35.9	0.14	83.8	.28	174
				RA622/632		RA1022/1032		RA1522/1532	
Reducer	2:1	1750	875	.26	17.8	1.07	73.2	1.8	132
		1150	575	.176	18.3	.72	75.0	1.4	150
		690	345	.108	18.7	.44	76.4	.89	162
		100	50	.016	19.2	.07	73.8	.14	175
Increaser*	1:2	1750	3500	.13	2.4	.55	10	1.8	33.0
		1150	2300	.10	2.6	.40	11.2	1.4	37.5
		690	1380	.06	2.8	.25	11.7	.89	40.5
		100	200	.01	3.0	.04	12.5	.14	43.8

* Applicable ratings when used as a speed increaser, and driven by "Y" or "Z" shaft only.
† Torque (LB-IN.)
Input Horsepower approximately 5% higher than output horsepower shown above.



NOTE: See page 306 for features and how to order information.

L

Dimensions

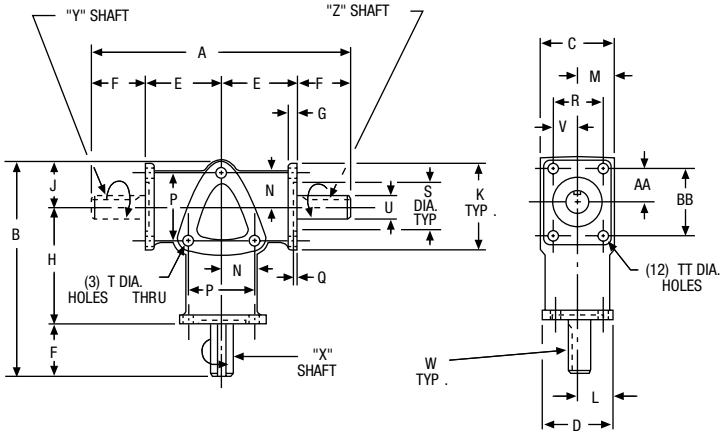

ALL DIMENSIONS IN INCHES **"Y" shaft omitted in 2-way sizes**

Size	A	B	C	D	E	F	G	H	J	K	L	M
RA6	3.95	3.66	1.25	1.22	1.38	.59	.19	2.16	.91	1.56	.61	.63
RA10	7.25	6.03	2.00	1.94	2.13	1.50	.25	3.25	1.28	2.44	.97	1.00
RA15	10.00	8.88	3.00	2.94	3.00	2.00	.31	5.00	1.88	3.75	1.47	1.50

Size	N	P	Q	R	S	T Holes	TT Holes	U +.000 –.001	ALL SHAFTS V	ALL SHAFTS W Keyway		AA	BB	Approx. Weight (Lbs.)
RA6	.66	1.31	.09	.88	.88	.194	.166	.375	.44	Flat		.59	1.19	3/4
RA10	.94	1.88	.09	1.38	1.38	.266	.266	.625	.69	3/16	3/32	.94	1.88	2-3/4
RA15	1.50	3.00	.13	2.25	2.13	.323	.323	.750	1.13	3/16	3/32	1.50	3.00	8

The letters X, Y and Z are used to designate specific shaft projections when ordering units with special shaft requirements.
NOTE: On 2:1 or 1:2 ratio's pinion will always be on X shaft.
No time relation between keyways on X, Y, or Z shafts.

RA600*/RA1000/RA1500 Series

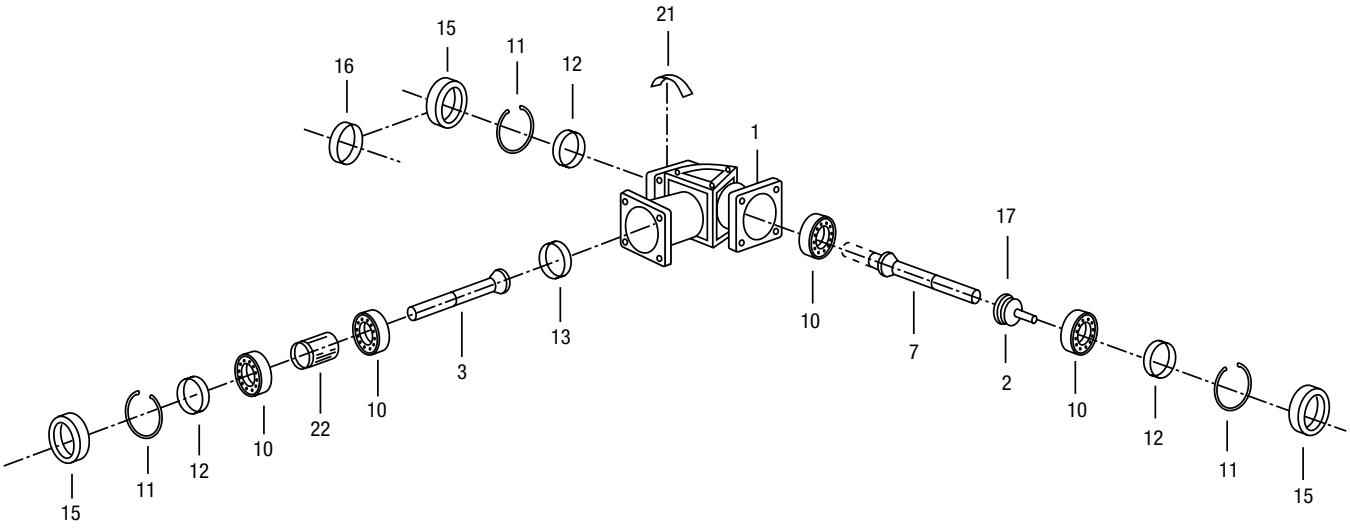

Part No.	Description of Part
1	HOUSING
2	OUTPUT GEAR
3	INPUT GEAR AND SHAFT
7	OUTPUT SHAFT
10	BALL BEARING
11	RETAINING RING
12	ADJUSTMENT SHIM
13	ADJUSTMENT SHIM
15	OIL SEAL
16	BORE PLUG
17	PIN
21	NAMEPLATE
22	SPACER

Part Ordering Information

Be sure to provide complete Boston Gear catalog number from speed reducer nameplate, along with part description and number.

* No replacement parts available.

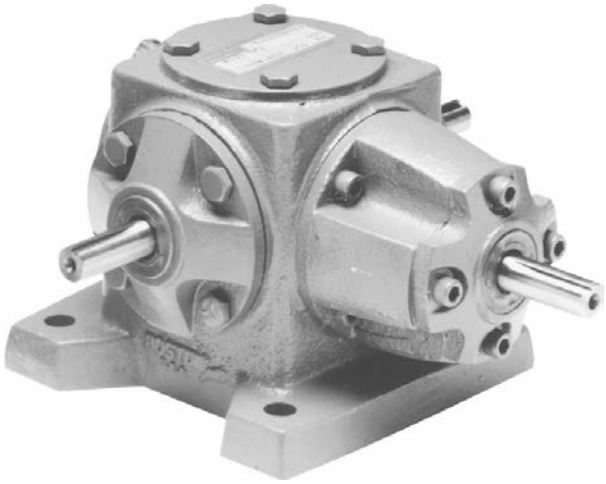

R100/R200

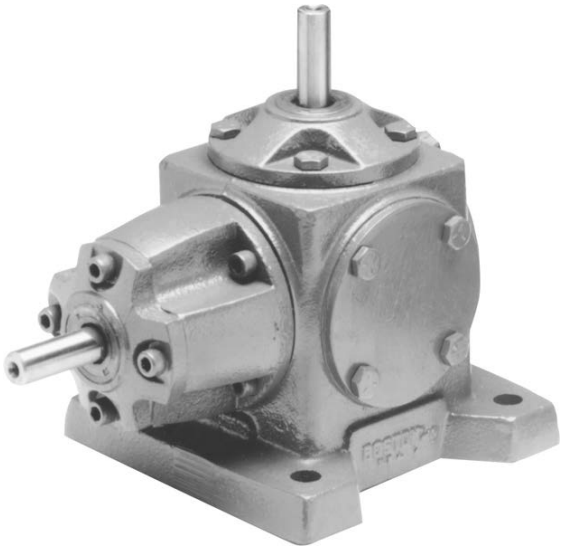

VR100/VR200

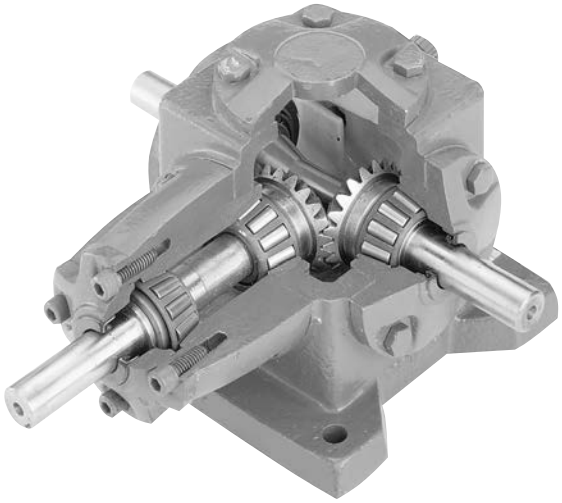

SPIRAL BEVEL GEAR

Boston “R” and “VR” 100 and 200 Series Spiral Bevel Gear Boxes are available in four sizes with horsepowers ranging from 2.19 to 50.92.

Features

- Spiral Bevel Gear Drives are designed for high efficiency, quiet operation and long service life. Gears are made of case-hardened alloy steel
- Shafts are heat treated, alloy steel mounted on heavy duty, tapered roller bearings
- Housings are made of cast iron, precision machined to assure accurate, permanent alignment of the gears

M

Section Contents

Numbering System / How To Order 310

Lubrication/Mounting. 310-311

Selection Charts 312

Dimensions 313

Parts List 314

Selection Procedure

Catalog ratings are based on Class I service (uniform load, operating no more than 10 hours/day). For applications meeting these conditions selection may be made by comparing the actual load to be transmitted with the appropriate catalog rating. For other conditions selection must be made, based on an equivalent horsepower or torque, obtained by multiplying actual load by the proper service factor.

Selection Procedure:

1. Determine the correct service factor using the Applications Classification Chart—Pages 354 & 355. If the application is not listed, obtain service factor from Service Factor Chart, Page 355.
2. Multiply the actual output horsepower or torque by the service factor to obtain the equivalent rating required.
3. Establish input and output speed and/or gear ratio required for the enclosed drive.
4. Selection of all bevel gear drives should be based on Steps 1 through 3 using Selection Chart for desired input and output speeds (including speed increasing drives) that satisfy the required equivalent horsepower or torque.

How to Order

R/VR Series Catalog Number **EXAMPLE:** R137-BM1 (40346)

SBK **VR** **1** **37** **K** **–** **N** **0** **–** **M5**

Reducer Material/ Paint (Cast Iron)
Blank–Standard Paint
BK – White *BostKleen* Paint
SBK– Stainless *Bost-Kleen* Paint

Housing Type
R – Horizontal
VR – Vertical

Ratio
1 – 1:1
2 – 2:1/1:2

Frame Size
31 – Size 31
37 – Size 37
46 – Size 46
58 – Size 58

Lubrication
Blank–No Lubrication
K – Klubersynth UH1 6-460
S – Mobil SHC 634

Assembly Type
A – R
B – R Standard
C – R
D – VR
E – VR
F – VR
G – VR
H – VR
J – VR
N – VR Standard
Q – VR
P – VR
See catalog for details

Rotation
Blank–Standard Rotation
0 – Opposite Relative Rotation
See catalog for details

Mounting Position

Horizontal (R)		Vertical (VR)	
M1	V1	M1	M7
M2	V2	M2	M8
M3		M3	V1
M4		M4	V3
		M5	V4
		M6	

See catalog for details

TO ORDER: Specify Catalog Number and or Item Code, Assembly Type and Mounting Position. (Ref. Page 314 for Item Code, Order Information)

M

Lubrication

Lubrication and maintenance instructions are provided with each speed reducer. These instructions should be followed for best results. It is important that the proper type of oil be used since many oils are not suitable for the lubrication of gears. Various types of gearing require different types of lubricants.

The lubricant must remain free from oxidation and contamination by water or debris since only a very thin film of oil stands between efficient operation and failure. To assure long service life, the reducer should be periodically drained (preferably while warm) and refilled to the proper level with a recommended gear oil. Under normal environmental conditions oil changes are suggested after the initial 250 hours of operation, and therefore, at regular intervals of 2500 hours or every 6 months. Synthetic lubricants will allow extended lubrication intervals due to its increased resistance to thermal and oxidation degradation. It is suggested that the initial oil change be made at 1500 hours and, thereafter, at 5000 hour intervals.

During the initial period of operation, higher than normal operating temperatures may be seen. This is due to the initial break-in of the gear set. The temperature of Bevel Gear Reducers may reach approximately 225°F.

Recommended Lubricant	Boston Gear Item Code
	Quart
Klubersynth UH1 6-460	65159
Mobil SHC634	51493

Bevel Gear Reducers

Ambient (Room) Temperature	Recommended Oil (or equivalent)	Viscosity Range S&S @ 100°F	Lubricant AGMA No.	ISO Viscosity Grade No.
–20° to 225°F ‡ (-29°C to 107°C)	Klubersynth* UH1 6-460	1950/2500	-----	460
-30° to 225°F (-34°C to 107°C)	Mobil SHC634	1950/2500	-----	320/460

Model No.		Quantity Per Unit
R131/R231	VR131/VR231	1/2 Pint
R137/R237	VR137/VR237	1/2 Pint
R146/R246	VR146/VR246	1-1/2 Pints
R158/R258	VR158/VR258	2-1/2 Pints

CAUTION: Relubricate more frequently if drive is operated in high ambient temperatures or unusually contaminated atmospheres. High loads and operating temperatures will also require more frequent relubrication.

* Synthetic recommendation is exclusively for Klubersynth UH1 6-460.

‡The Synthetic lubricant will perform at temperatures considerably higher than 225°F. However, the factory should always be consulted prior to operating at higher temperatures, as damage may occur to oil seals and other components.

R100/R200 Series

Mountings

Mountings are designated by combining identification for Assembly Type and Mounting Position.
Example: Mtg. AM1.

Assembly B is standard for Type R and Assembly N is standard for Type VR and will be furnished unless otherwise specified.

All assemblies can be mounted in any position shown with “X” Shaft horizontal by re-locating Oil Plugs in proper position.

Mountings with “X” Shaft vertical available at a slight extra charge.

Shafts can rotate in either direction, arrows show standard relative rotation. Opposite relative rotation available at no additional charge.

To order with opposite relative rotation, insert letter “O” between Assembly and Mounting code.
Example: AOM1.

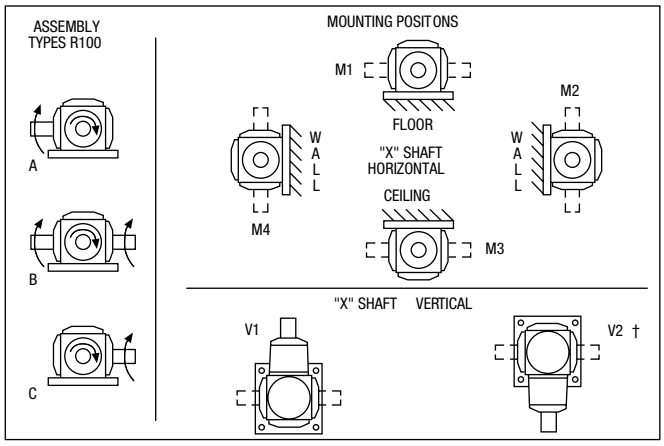

VR100/VR200 Series

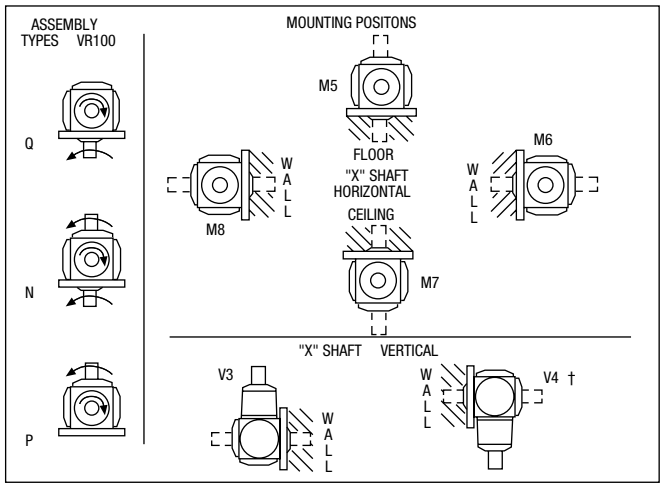

Mountings shown below are available on an assembled to order basis.

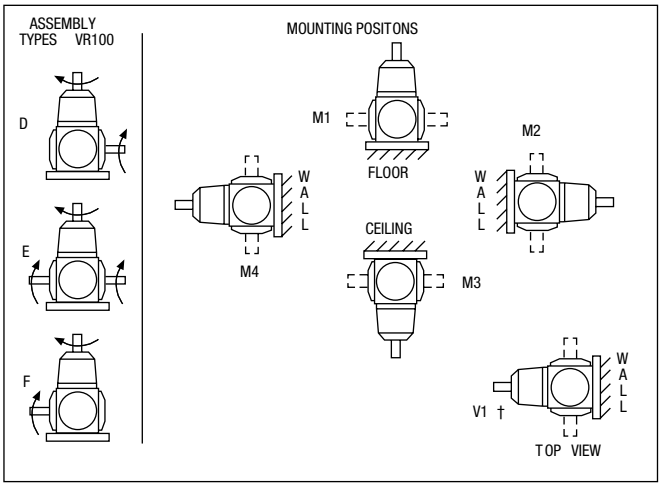

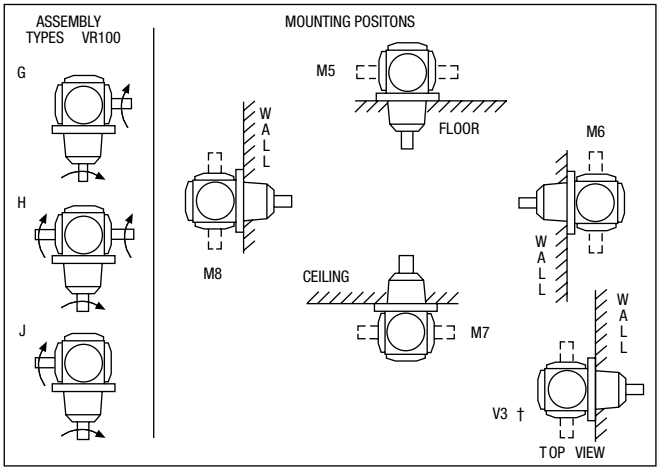

Filler, level and drain plugs are located on the back side of views shown.

† Special filler, level and drain plugs provided.

R100/R200, VR100/VR200 Series

Selection Charts

	Ratio	Input RPM	Output RPM	R/VR131 Output HP	R/VR131 Output Torque†	R/VR137 Output HP	R/VR137 Output Torque†	R/VR146 Output HP	R/VR146 Output Torque†	R/VR158 Output HP	R/VR158 Output Torque†
	1:1	1750	1750	4.2	151	8.8	318	25.1	905	50.9	1834
		1150	1150	3.1	164	5.8	318	18.5	1012	40.9	2242
		690	690	1.9	174	3.5	318	11.4	1044	25.4	2324
		100	100	.40	252	.60	378	1.8	1145	4.0	2546
				R/VR231		R/VR237		R/VR246		R/VR258	
Reducer	2:1	1750	875	2.2	158	3.7	267	12.2	878	22.6	1620
		1150	575	1.5	161	2.5	272	8.2	900	15.2	1670
		690	345	.90	164	1.5	280	5.1	924	9.4	1717
		100	50	.15	189	.23	290	.77	970	1.5	1870
Increaser*	1:2	1750	3500	2.2	39.5	3.7	67	12.2	220	–	–
		1150	2300	1.5	40.2	2.5	68	8.2	225	15.2	418
		690	1380	.90	41.0	1.5	70	5.1	231	9.4	429
		100	200	.15	47.2	.23	72	.77	242	1.5	468

* **NOTE:** On 2:1 or 1:2 ratios, pinion will always be on X shaft.
† Torque (LB-INS)
I/P H.P. approx. 5% higher.

M

Suggested Maximum Input Speeds**	
R & VR131, R & VR231	4000 RPM
R & VR137, R & VR237, R & VR246	3600 RPM
R & VR146, R & VR158, R & VR258	2500 RPM

** Sound level, operating temperature and venting are usually affected at high operating speeds.

ORDER BY CATALOG NUMBER OR ITEM CODE

Horizontal Model R100/200					Vertical Model VR100/200				
		Item Code					Item Code		
		Assembly Type					Assembly Type		
Series	Ratio	AM1	BM1	CM1	Series	Ratio	QM5	NM5	PM5
R131 R231	1:1 2:1	40328 42860	40332 42864	40336 42868	VR131 VR231	1:1 2:1	42220 42928	42212 42920	42216 42924
R137 R237	1:1 2:1	40342 42874	40346 42878	40350 42882	VR137 VR237	1:1 2:1	42238 42946	42230 42938	42234 42942
R146 R246	1:1 2:1	40356 42888	40360 42892	40364 42896	VR146 VR246	1:1 2:1	42256 42964	42248 42956	42252 42960
R158 R258	1:1 2:1	40370 42902	40374 42906	40378 42910	VR158 VR258	1:1 2:1	42274 42982	42266 42974	42270 42978

R100/R200, VR100/VR200 Series

Dimensions – Horizontal Base Models

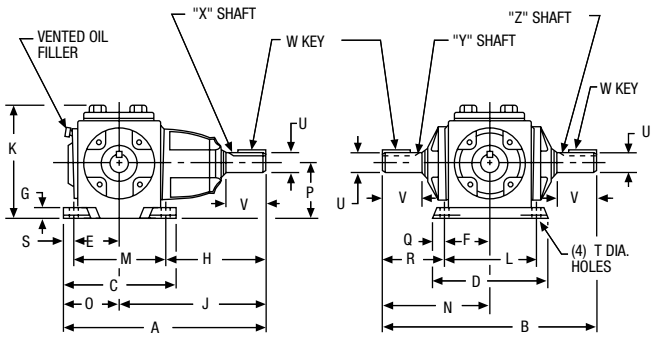

ASSEMBLY TYPES

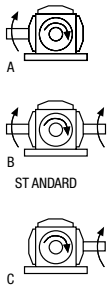

For mounting positions see page 311.

ALL DIMENSIONS IN INCHES

Model No.	A	B	C	D	E	F	G	H	J	K	L	M
R131/231	8.16	7.81	5.31	5.25	2.03	2.03	.63	3.47	5.50	4.78	4.06	4.06
R137/237	10.16	9.28	6.19	6.13	2.44	2.44	.63	4.63	7.06	5.72	4.88	4.88
R146/246	12.50	11.66	7.50	7.38	3.00	3.00	.75	5.75	8.75	6.75	6.00	6.00
R158/258	16.47	16.84	9.25	9.00	3.75	3.75	.88	8.09	11.84	8.56	7.50	7.50

Model No.	N	O	P	Q	R	S	T Holes	U +.000 -.001	V	W-Key Sq.	W-Key Lgth.	Approx. Weight (Lbs.)
R131/231	3.91	2.66	2.63	.59	1.88	.63	.44	.500	1.31	1/8	7/8	14
R137/237	4.64	3.09	3.00	.63	2.20	.66	.44	.750	1.69	3/16	1	27
R146/246	5.83	3.75	3.50	.69	2.83	.75	.53	1.000	1.94	1/4	1-1/4	51
R158/258	8.42	4.63	4.50	.75	4.67	.88	.56	1.500	3.44	3/8	2-1/4	104

Dimensions – Vertical Base Models

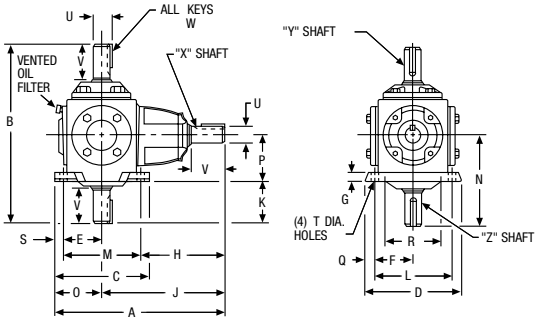

ASSEMBLY TYPES

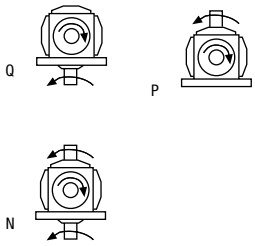

For mounting positions see page 311.

ALL DIMENSIONS IN INCHES

Model No.	A	B	C	D	E	F	G	H	J	K	L	M
VR131/231	8.16	7.81	5.31	5.25	2.03	2.03	.63	3.47	5.50	1.28	4.06	4.06
VR137/237	10.16	9.28	6.19	6.13	2.44	2.44	.63	4.63	7.06	1.64	4.88	4.88
VR146/246	12.50	11.66	7.50	7.38	3.00	3.00	.75	5.75	8.75	2.33	6.00	6.00
VR158/258	16.47	16.84	9.25	9.00	3.75	3.75	.88	8.09	11.84	3.92	7.50	7.50

Model No.	N	O	P	Q	R	S	T Holes	U +.000 -.001	V	W-Key Sq.	W-Key Lgth.	Approx. Weight (Lbs.)
VR131/231	3.91	2.66	2.63	.59	–	.63	.44	.500	1.31	1/8	7/8	14
VR137/237	4.64	3.09	3.00	.63	–	.66	.44	.750	1.69	3/16	1	27
VR146/246	5.83	3.75	3.50	.69	3.75	.75	.53	1.000	1.94	1/4	1-1/4	51
VR158/258	8.42	4.63	4.50	.75	4.50	.88	.56	1.500	3.44	3/8	2-1/4	104

The letters X, Y and Z are used to designate specific shaft projections when ordering units with special shaft requirements.

M

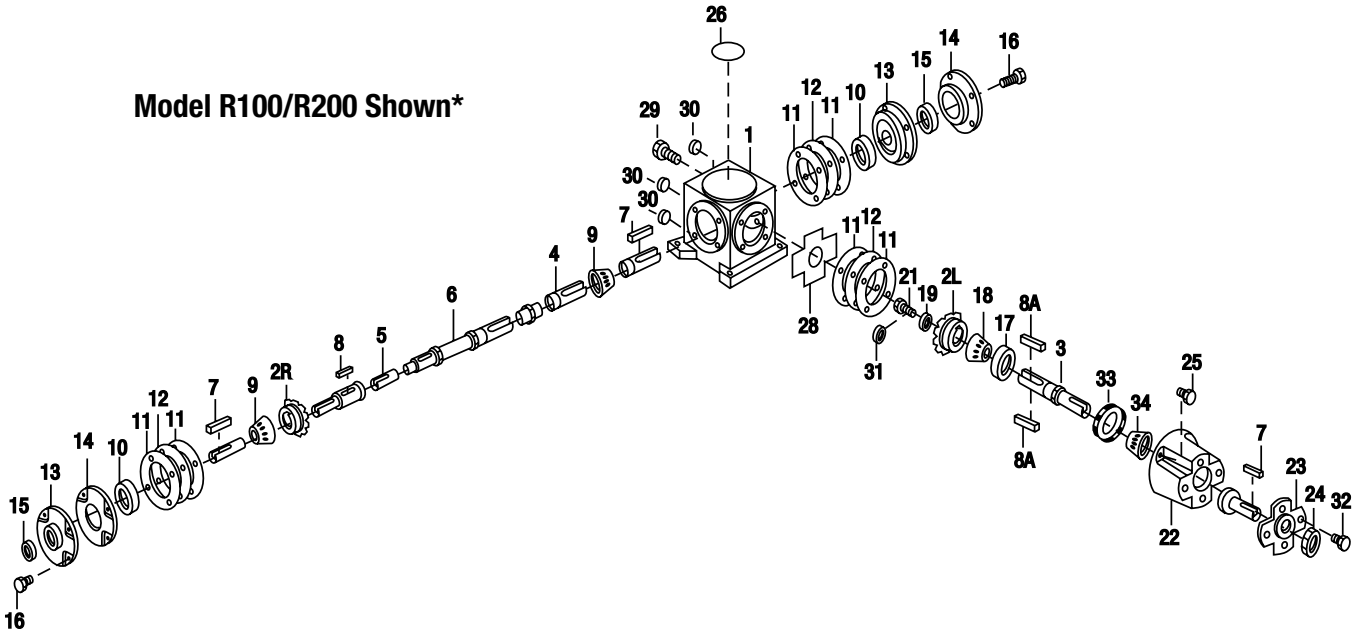

M

Part Ordering Information

Be sure to provide complete Boston Gear catalog number from speed reducer nameplate, along with part description and number.

* **Note:** Models R100/R200 parts common to VR100/VR200.

Item No.	Description of Part	Item No.	Description of Part	Item No.	Description of Part
1	Basic Housing	10	Bearing Cup, Output	23	Input Bearing Retainer
1A	Basic Housing - VR Series	11	Shim	24	Oil Seal, Input
2R	Spiral Miter or Bevel Gear (RH)	12	Shim	25	Soc. Head Capscrew
2L	Spiral Miter Gear or Bevel Pinion (LH)	13	Output Bearing Carrier (O/E)	26	Small Nameplate
3	Input Shaft	14	Output Bearing Carrier (C/E)	28	Baffle
4	Output Shaft-Double Proj	15	Oil Seal, Output	29	Vented Oil Filler
5	Output Shaft-Single Proj	16	Hex Head Capscrews	30	Socket Pipe Plug
6	Output Shaft-Single Proj	17	Bearing Cup, Input	31	Locknut-R & VR 231
7	Key	18	Bearing Cone, Input	32	Socket Head Capscrew
8	Key, Gear	19	Input Shaft Washer	33	Bearing Cup, Input
8A	Key, Gear or Pinion	21	Input Shaft Hex Hd Capscrew	34	Bearing Cone, Input
9	Bearing Cone, Output	22	Input Shaft Bearing Carrier		

Selection Procedure



MODEL NUMBERS AND RATIOS
Assembly types shown with
Dimensions on the following pages.

Model No.	Overhung Load (No Thrust)	
	From End of Shaft (Inches)	Load (Pounds)
R1200	–	–
R1210	1	500
R1400	1-1/4	900
R1500	1-1/2	1300

Catalog ratings are based on Class I service (uniform load, operating no more than 10 hours/day). For applications meeting these conditions selection may be made by comparing the actual load to be transmitted with the appropriate catalog rating. For other conditions selection must be made, based on an equivalent horsepower or torque, obtained by multiplying actual load by the proper service factor.

Selection Procedure:

1. Determine the correct service factor using the Applications Classification Chart—Pages 354 & 355. If the application is not listed, obtain service factor from Service Factor Chart on page 355.
2. Multiply the actual output torque or HP by the service factor to obtain the equivalent rating required.
3. Establish input and output speed and/or gear ratio required for the enclosed drive.
4. Selection of all bevel gear drives should be based on Steps 1 through 3 using Selection Chart for desired input and output speeds (including speed increasing drives) that satisfy the required equivalent horsepower or torque.

TO ORDER: Specify Model Number, Ratio and Assembly Type

EXAMPLE: R1211-1.5-A, Item Code (61037)

N

Section Contents

Selection Procedure / How To Order 315

R1000 Series - Item Codes 316

Mountings / Lubricants 317

Selection Charts 318-320

Dimensions 321-327

R1000 Series Bevel Gear Drives **Item Codes**

Series	Ratio	Assembly Type								
		A	B	D	F	H	I	J	K	L
R1200	1		54998	54999	06111					
	1.35		06112	06113	06114					
	1.5		06115	54995	06116					
	2		54996	54997	06117					
	3		06118	06119	06120					
R1211	1	61035								
	1.35	61036								
	1.5	61037								
R1214	1		61038	61042	61046					
	1.35		61039	61043	61047					
	1.5		61040	61044	61048					
	2		61041	61045	61049					
R1215	1		61083	61086	61089			61092		
	1.35		61084	61087	61090			61093		
	1.5		61085	61088	61091			61094		
R1216	1					61105	61108		61111	61115
	1.35					61106	61109		61113	61116
	1.5					61107	61110		61114	61117
R1412	1		61127	61130	61133					
	1.35		61128	61131	61134					
	1.5		61129	61132	61135					
R1413	1		61357	61361	61365					
	1.35		61358	61362	61366					
	1.5		61359	61363	61367					
	2		61360	61364	61368					
R1414	1		61082	61103	61155			61228		
	1.35		61172	61214	61226					
	1.5		61229	61236	61240			61260		
	2		61261	61263	61268			61273		
R1416	1					61369			61372	61375
	1.35					61370			61373	61376
	1.5					61371			61374	61377
R1511	1	61378								
	1.35	61379								
	1.5	61380								
R1514	1		61381	61385	61392					
	1.35		61382	61386	61393					
	1.5		61383	61387	61394					
	2		61384	61388	61395					
R1515	1		61713	61716	61719			61728		
	1.35		61714	61717	61720			61729		
	1.5		61715	61718	61727			61730		
R1516	1					61025			61028	61031
	1.35					61026			61029	61032
	1.5					61027			61030	61033

Item code listed for most commonly requested assembly models. Others may be available on request.
Assembly C, E, or G can be easily converted from assembly B, D or F respectively. See Page 317.

N

Mountings

Standard mounting is with all shafts horizontal to the floor. R1200 series units are provided with two pipe plugs and are non-vented. This allows the R1200 series to be mounted in any position without the need of moving plugs. Models R1211, R1216, R1416, and R1516 have (2) pipe plugs, oil vent-filler and oil drain, and should only be mounted in the horizontal position. All other models have (3) pipe plugs, oil vent-filler, level, drain, and are horizontal mount also. They may also be mounted with "X" shaft vertical down but are limited to oil vent-filler and oil level control – no oil drain plugs. Drives used in a vertical mounting application may require additional pipe plugs and/or grease fittings for proper lubrication and are considered special.

The R1000 Series right angle drives with forged gear teeth may have a somewhat higher noise level at the higher speed range and also more backlash as compared with our "R" and "VR" 100 and 200 Series right angle spiral gear drives.

On models where types "B", "D" & "F" are stocked, these can be easily converted, by the customer to types "C," "E" & "G" respectively by simply rotating the unit 180° to its opposite mounting surface and also switching the pipe plugs for vent and drain on all series except R1200. The R1200 unit is sealed and does not have a vented plug.

1– CLOCKWISE (CW) AND COUNTERCLOCKWISE (CCW) NOTATIONS INDICATE DIRECTION OF ROTATION OF SHAFTS WHEN FACING OUTER END OF SHAFT EXTENSIONS.

2– ARROWS SHOWN ON DRAWINGS ARE OVER THE TOP OF SHAFT EXTENSIONS.

3– THE LETTERS W, X, Y, Z SHOWN ADJACENT TO THE SHAFT EXTENSIONS ARE USED TO DESIGNATE SPECIFIC SHAFT EXTENSIONS WHEN ORDERING BOXES WITH SPECIAL SHAFTS.

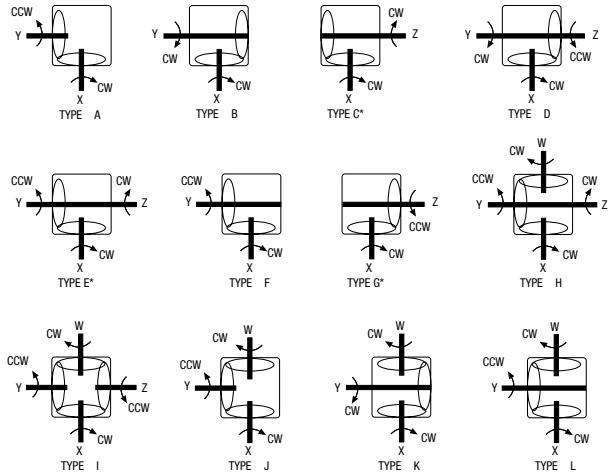

* **Note:** Top and bottom of housings are both machined surfaces. By interchanging vent plug and drain plug you can convert B to C, D to E, F to G. On R1200 series, the plugs do not require changing.

Lubrication

Lubrication and maintenance instructions are provided with each speed reducer. These instructions should be followed for best results. It is important that the proper type of oil be used since many oils are not suitable for the lubrication of gears. Various types of gearing require different types of lubricants.

The lubricant must remain free from oxidation and contamination by water or debris, since only a very thin film of oil stands between efficient operation and failure.

To assure long service life, the reducer should be periodically drained (preferably while warm) and refilled to the proper level with a recommended gear oil. Under normal environmental conditions oil changes are suggested after the initial 250 hours of operation, and thereafter, at regular intervals of 2500 hours or every 6 months. Synthetic lubricants will allow extended lubrication intervals due to its increased resistance to thermal and oxidation degradation. It is suggested that the initial oil change be made at 1500 hours and, thereafter, at 5000 hour intervals.

During the initial period of operation, higher than normal operating temperatures may be seen. This is due to the initial break-in of the gear set. The temperature of Bevel Gear Reducers may reach approximately 225°F.

Bevel Gear Reducers

Ambient (Room) Temperature	Recommended Oil (or equivalent)	Viscosity Range S&S @ 100°F	Oil Type	ISO Viscosity Grade No.
–20° to 225°F ‡ (-29°C to 107°C)	Klubersynth* UH1 6-460	1950/2500	PAG	460
-30° to 225°F (-34°C to 107°C)	Mobil SHC634	1950/2500	PAO	320/460

Recommended Lubricant	Boston Gear Item Code
	Quart
Klubersynth UH1 6-460	65159
Mobil SHC634	51493

CAUTION: Relubricate more frequently if drive is operated in high ambient temperatures or unusually contaminated atmospheres. High loads and operating temperatures will also require more frequent relubrication.

* Synthetic recommendation is exclusively for Klubersynth UH1 6-460.

‡ The synthetic lubricant will perform at temperatures considerably higher than 225°F. However, the factory should always be consulted prior to operating at higher temperatures, as damage may occur to oil seals and other components.

** Model R1200 unit only is pre-lubricated with 5 oz of AGMA 5 EP Gear Lubricant.

N

R1200 Series

Selection Chart – Ratings For Service Factor (1.0)

	Ratio	Input RPM	Output RPM	R1200** Output HP	R1200** Output Torque*	R1211 R1215 R1216 Output HP	R1211 R1215 R1216 Output Torque*	R1214 Output HP	R1214 Output Torque*
	1:1	1750 1150 690 100	1750 1150 690 100	4.58 3.58 2.67 .79	165 196 241 500	31.15 22.71 15.20 3.09	1122 1245 1390 1945	28.33 20.65 14.08 2.81	1021 1132 1268 1769
Reducer	1.35:1	1750 1150 690 100	1296 852 511 74	3.44 2.70 2.02 .62	124 148 185 390	14.46 10.48 7.11 1.45	703 776 864 1230	13.14 9.53 6.46 1.31	639 706 785 1118
Reducer	1.5:1	1750 1150 690 100	1167 767 460 67	3.14 2.49 1.75 .35	113 136 158 222	13.17 9.54 6.46 1.26	712 785 873 1196	11.98 8.67 5.87 1.15	647 713 793 1087
Reducer	2:1	1750 1150 690 100	875 575 345 50	2.33 1.81 1.22 .24	84 99 109 152			7.80 6.36 4.88 .85	563 697 879 1070
Reducer	3:1	1750 1150 690 100	583 383 230 33	1.25 .87 .60 .52	45 48 54 74				
Increaser	1:1.35	1750 1150 690 100	2362 1552 932 135			14.46 10.48 7.11 1.45	366 404 457 663	13.14 9.53 6.46 1.31	333 364 415 580
Increaser	1:1.5	1750 1150 690 100	2625 1750 1032 150			13.17 9.54 6.46 1.26	300 326 375 503	11.98 8.67 5.87 1.15	273 297 340 459
Increaser	1:2	1750 1150 690 100	3500 2300 1380 200					7.80 6.36 4.88 .85	133 165 212 254

Note: On other than 1:1 ratios pinion will always be on X shaft.

* Torque (lb-ins)

** R1200 is prelubricated with 5 oz. of AGMA 5 EP Gear lubricant.

Input Horsepower approximately 5% higher than output horsepower shown above.

N

R1400 Series

Selection Chart – Ratings For Service Factor (1.0)

	Ratio	Input RPM	Output RPM	R1412 R1416 Output HP	R1412 R1416 Output Torque*	R1413 R1414 Output HP	R1413 R1414 Output Torque*
	1:1	1750 1150 690 100	1750 1150 690 100	— 52.26 35.82 6.53	— 2864 3225 4115	— 37.36 27.13 5.94	— 2022 2442 3741
Reducer	1.35:1	1750 1150 690 100	1296 850 511 74	38.39 27.97 19.06 3.59	1867 2070 2317 3051	34.91 25.43 17.34 3.26	1698 1882 2107 2775
Reducer	1.5:1	1750 1150 690 100	1167 767 460 67	35.56 25.74 16.77 2.90	1922 2117 2265 2745	32.34 23.41 15.25 2.64	1747 1925 2060 2496
Reducer	2:1	1750 1150 690 100	875 575 345 50			18.98 14.55 10.58 1.81	1367 1596 1905 2279
Increaser	1:1.35	1750 1150 690 100	2362 1552 932 135	— 27.97 19.06 3.59	— 1079 1224 1592	— 25.43 17.34 3.26	— 981 1114 1446
Increaser	1:1.5	1750 1150 690 100	2625 1750 1032 150	— 25.74 16.77 2.90	— 880 973 1158	— 23.40 15.25 2.64	— 800 885 1053
Increaser	1:2	1750 1150 690 100	3500 2300 1380 200			— 14.55 10.58 1.81	— 379 459 542

* Output Torque (lb-ins)

Input Horsepower approximately 5% higher than output horsepower shown above.

N

R1500 Series

Selection Chart – Ratings For Service Factor (1.0)

				R1511 R1515 R1516		R1514	
				Output		Output	
	Ratio	Input RPM	Output RPM	HP	Torque*	HP	Torque*
	1:1	690 300 100	690 300 100	94.54 46.99 17.60	8511 9872 11092	66.77 39.28 14.71	6011 8251 9270
Reducer	1.35:1	1150 690 300 100	852 511 222 74	79.29 52.10 24.89 9.24	5867 6332 7080 7885	49.60 47.38 22.64 8.41	3679 5759 6421 7153
Reducer	1.5:1	1150 690 300 100	767 460 200 67	58.90 38.62 18.40 6.81	4843 5216 5797 6438	23.20 15.90 8.16 3.33	1907 2147 2570 3145
Reducer	2:1	1750 1150 690 300 100	875 575 345 150 50			26.71 19.45 13.26 6.76 2.57	1925 2134 2388 2838 3242
Increaser	1:1.35	690 300 100	932 222 135	52.10 24.89 9.24	3342 6713 4098	47.38 22.64 8.41	3044 6106 3730
Increaser	1:1.5	690 300 100	1032 450 150	38.62 18.40 6.81	2241 2448 2718	15.90 8.16 3.33	922 1086 1329
Increaser	1:2	1150 690 300 100	2300 1380 600 200			19.45 13.26 6.76 2.57	506 575 674 769

* Torque (lb-ins)

Input Horsepower approximately 5% higher than output horsepower shown above.

N

R1200 Series
Dimensions

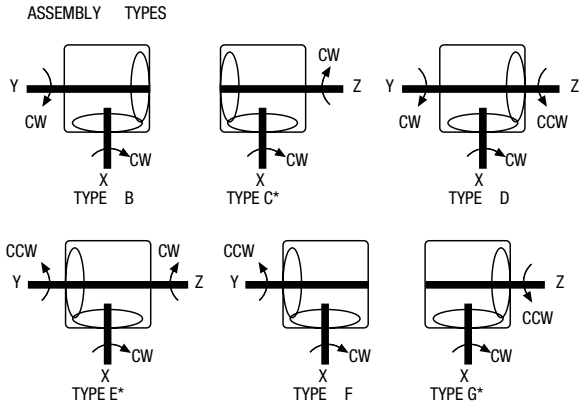

* Types “C,” “E” and “G” can be accomplished by rotating types “B,” “D” and “F” respectively 180°. No change in plugs are required.

Approx. Wt. – 7 Lbs

Note: On other than 1:1 ratio, pinion (small gear) will always be on X shaft.

CW and CCW notations indicate direction of shaft rotation when facing outer end of shaft extensions. The letters W, X, Y, Z are used to designate specific shaft extensions when ordering boxes with special shafts.

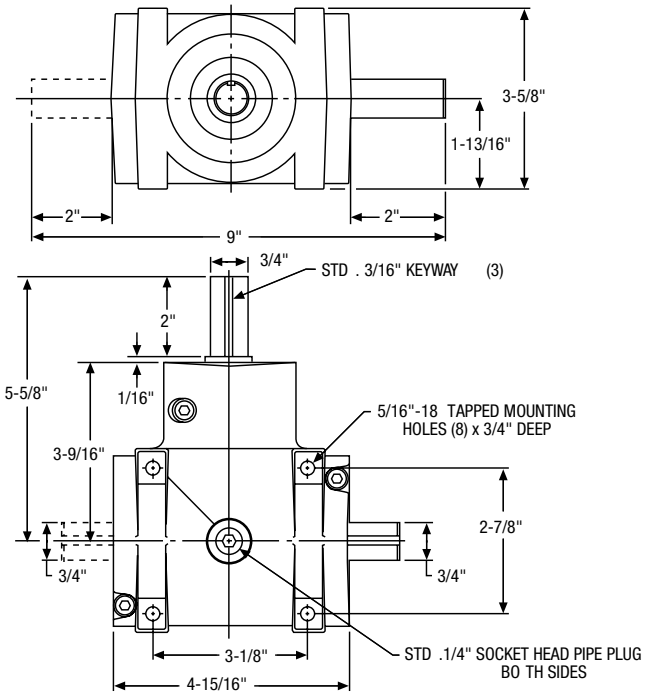

N

R1211 Series

Dimensions

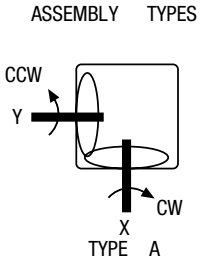

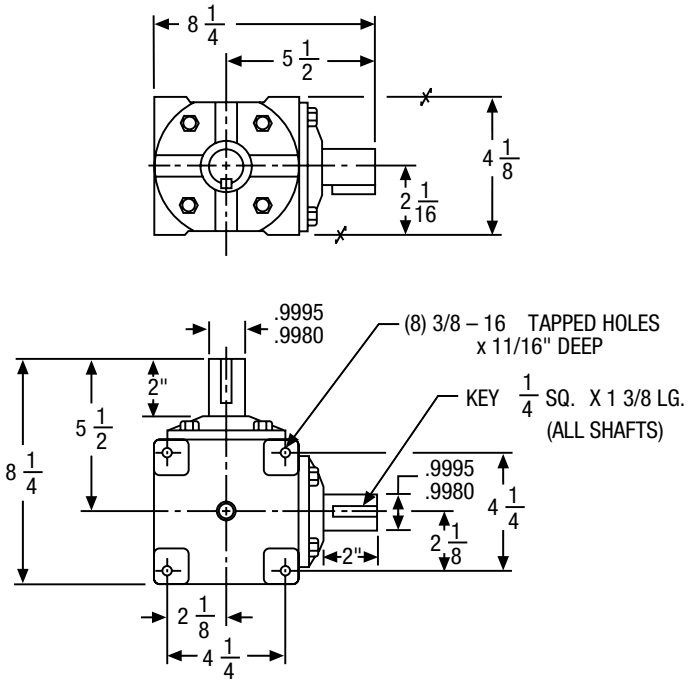

Oil Capacity – 16 ozs.

Approx. Wt. – 22 Lbs.

Note: On other than 1:1 ratio, pinion (small gear) will always be on X shaft.

R1214 Series

Dimensions

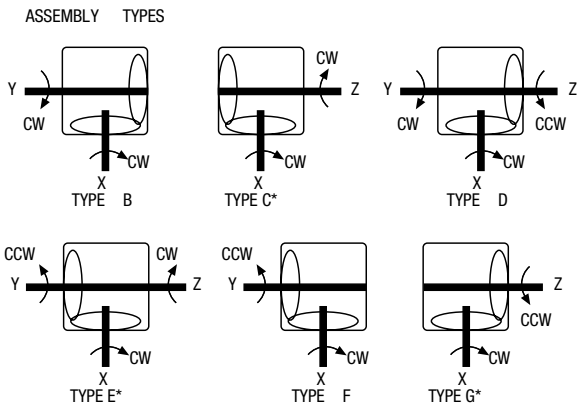

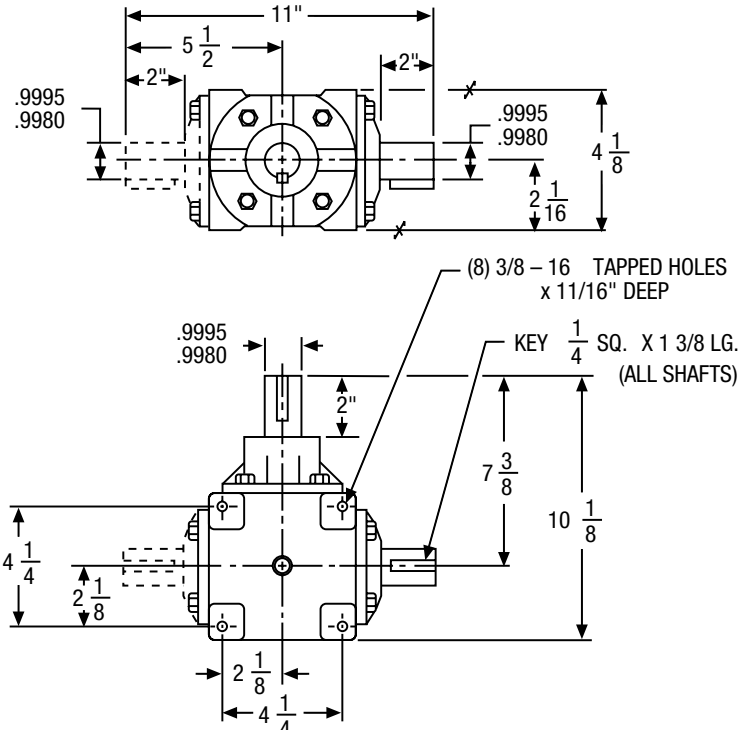

R1214 (2:1 RATIO ONLY is spiral bevel.)

Oil Capacity – 16 ozs.

Approx. Wt. – 25 Lbs.

Note: On other than 1:1 ratio, pinion (small gear) will always be on X shaft.

CW and CCW notations indicate direction of shaft rotation when facing outer end of shaft extensions.
The letters W, X, Y, Z are used to designate specific shaft extensions when ordering boxes with special shafts.

R1215 Series

Dimensions

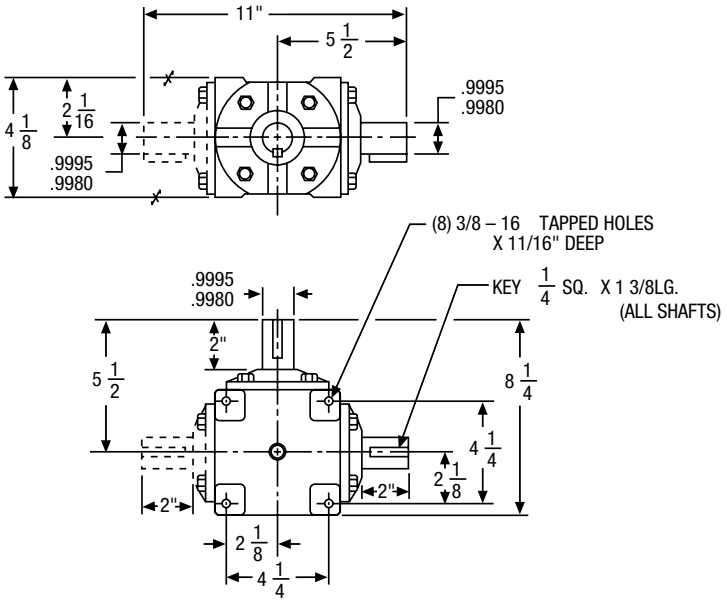

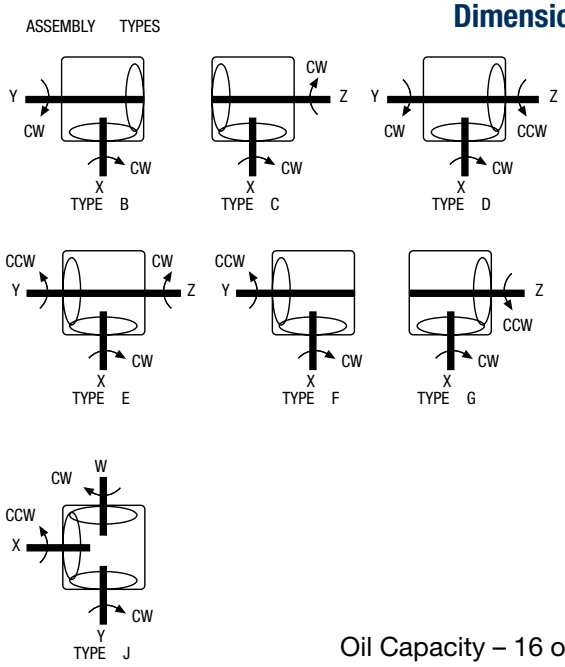

Oil Capacity – 16 ozs.

Approx. Wt. – 27 Lbs.

Note: On other than 1:1 ratio, pinion (small gear) will always be on X shaft.

R1216 Series

Dimensions

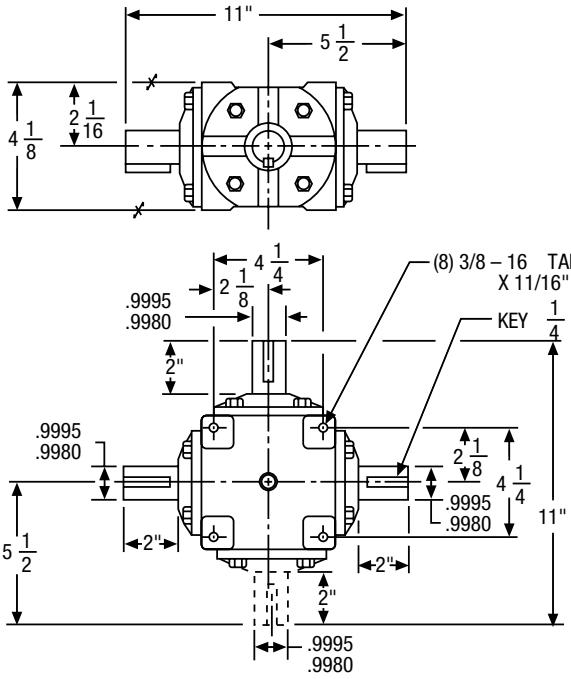

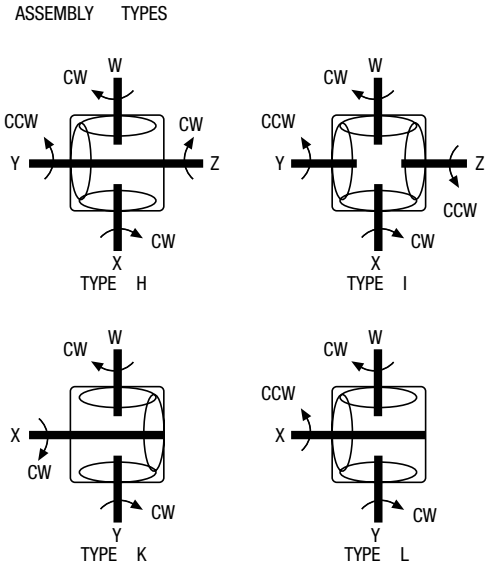

Oil Capacity – 16 ozs.

Approx. Wt. – 28 Lbs.

Note: On other than 1:1 ratio, pinion (small gear) will always be on Y/Z shaft.

CW and CCW notations indicate direction of shaft rotation when facing outer end of shaft extensions.
The letters W, X, Y, Z are used to designate specific shaft extensions when ordering boxes with special shafts.

N

R1412 Series

Dimensions

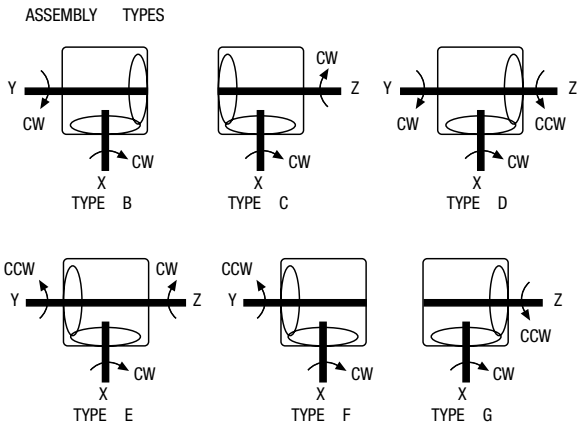

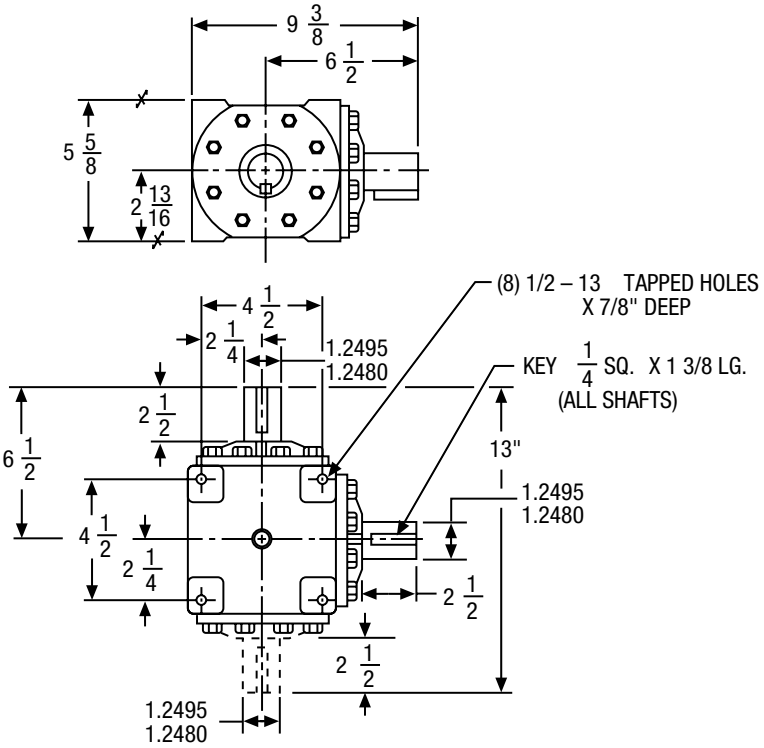

Oil Capacity – 24 ozs.

Approx. Wt. – 39 Lbs.

Note: On other than 1:1 ratio, pinion (small gear) will always be on X shaft.

R1413 Series

Dimensions

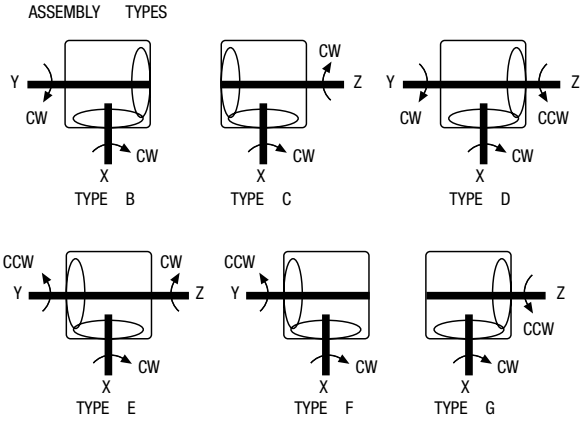

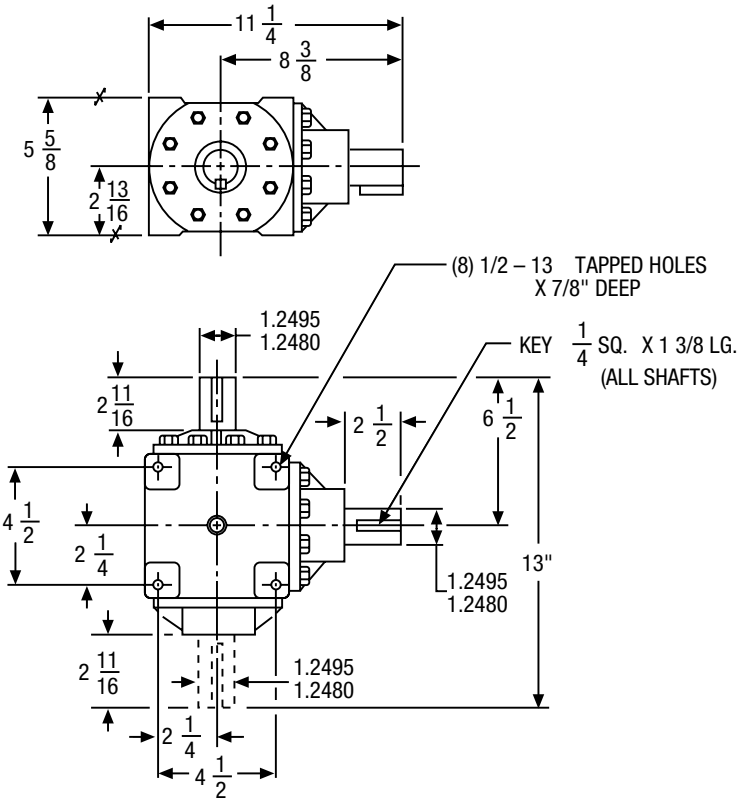

Oil Capacity – 32 ozs.

Approx. Wt. – 39 Lbs.

Note: On other than 1:1 ratio, pinion (small gear) will always be on X shaft.

CW and CCW notations indicate direction of shaft rotation when facing outer end of shaft extensions.
The letters W, X, Y, Z are used to designate specific shaft extensions when ordering boxes with special shafts.

R1414 Series

Dimensions

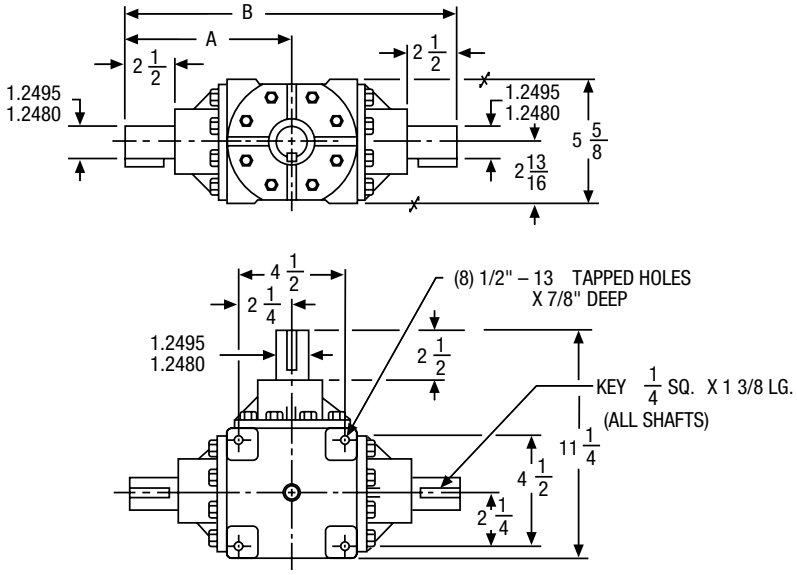

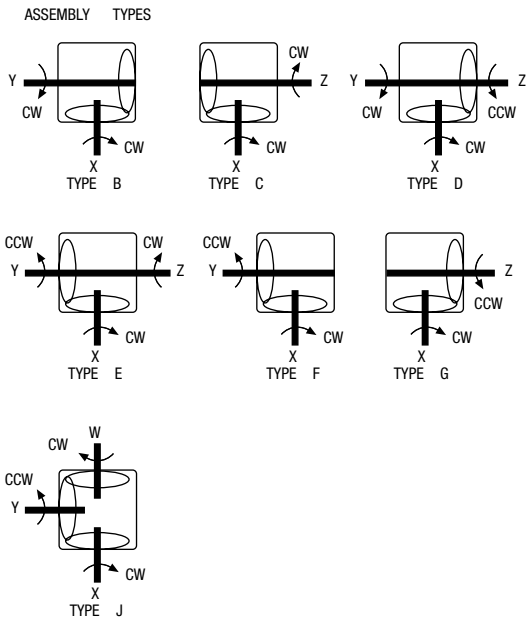

Note: Type J illustrated.

A	B	MTG. TYPE
8 3/8	16 3/4	J
6 1/2	13	All Others

Oil Capacity – 32 ozs.

Approx. Wt. – 50 Lbs.

Note: On other than 1:1 ratio, pinion (small gear) will always be on X shaft.

R1416 Series

Dimensions

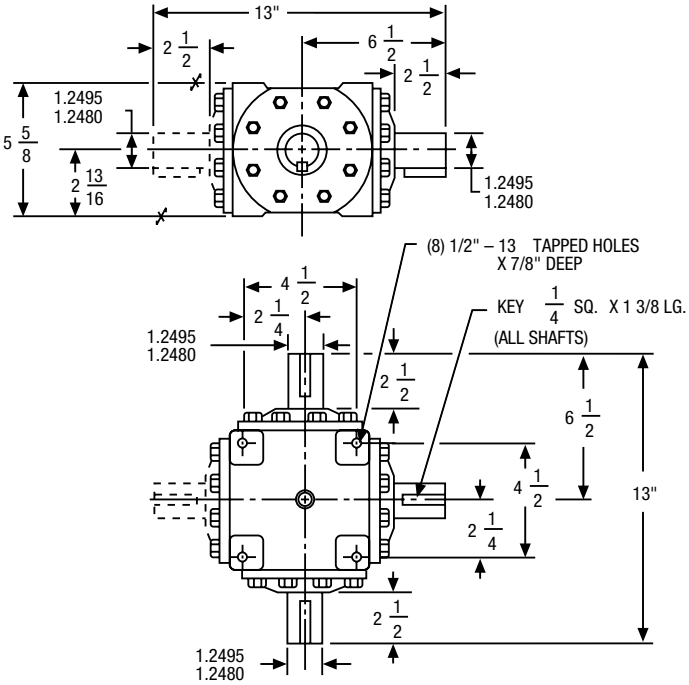

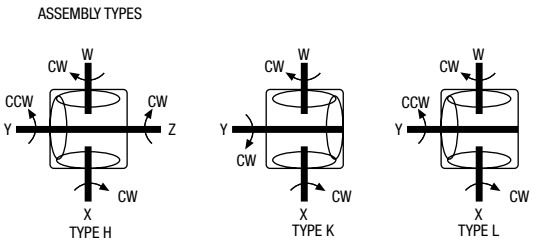

Oil Capacity – 24 ozs.

Approx. Wt. – 50 Lbs.

Note: On other than 1:1 ratio, pinion (small gear) will always be on X shaft.

CW and CCW notations indicate direction of shaft rotation when facing outer end of shaft extensions. The letters W, X, Y, Z are used to designate specific shaft extensions when ordering boxes with special shafts.

N

R1511 Series

Dimensions

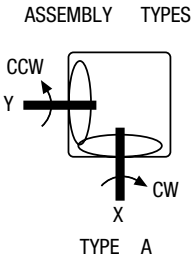

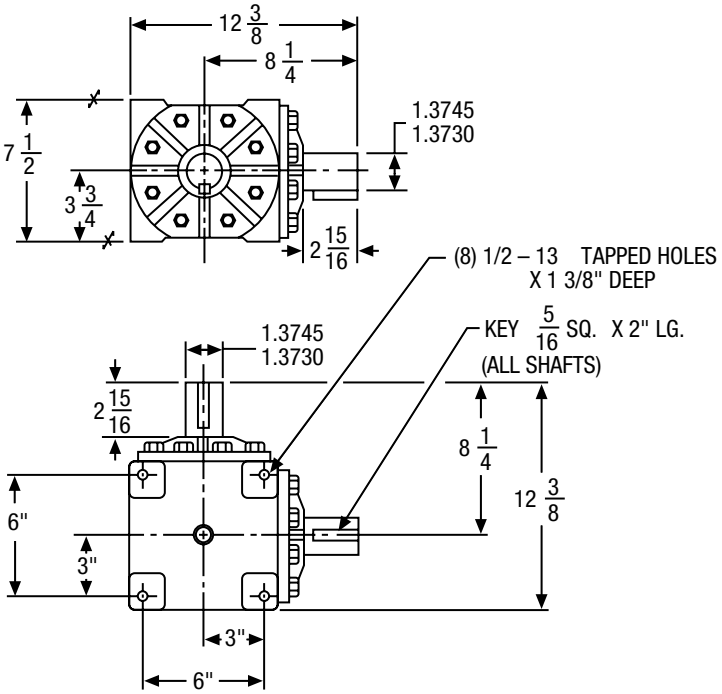

Oil Capacity – 64 ozs.

Approx. Wt. – 73 Lbs.

Note: On other than 1:1 ratio, pinion (small gear) will always be on X shaft.

R1514 Series

Dimensions

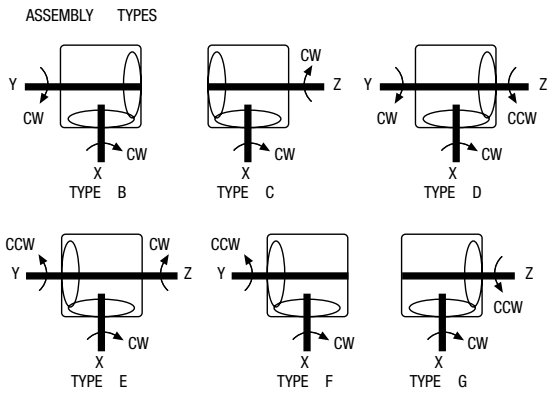

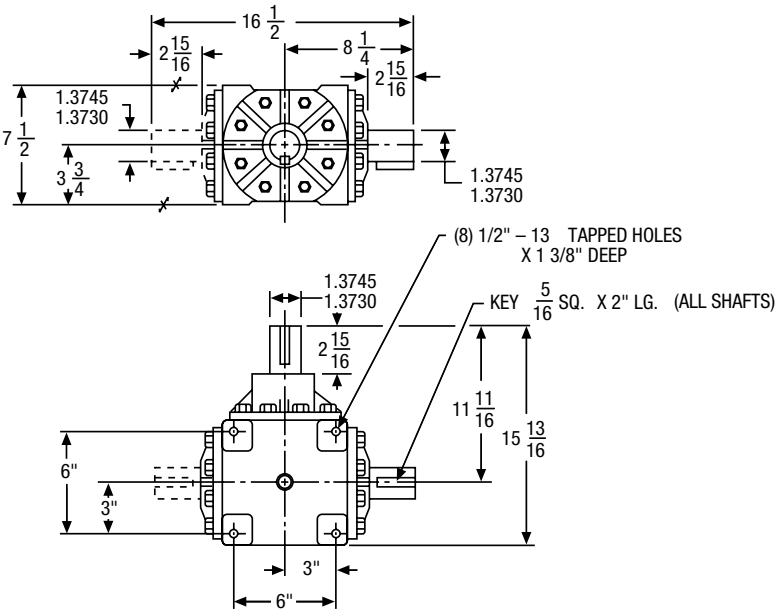

Oil Capacity – 88 ozs.

Approx. Wt. – 78 Lbs.

Note: On other than 1:1 ratio, pinion (small gear) will always be on X shaft.

CW and CCW notations indicate direction of shaft rotation when facing outer end of shaft extensions.
The letters W, X, Y, Z are used to designate specific shaft extensions when ordering boxes with special shafts.

R1515 Series

Dimensions

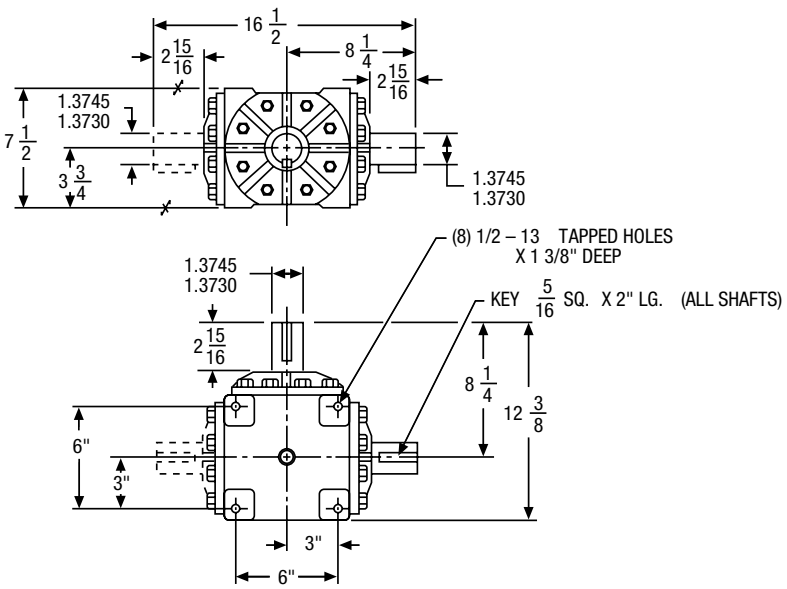

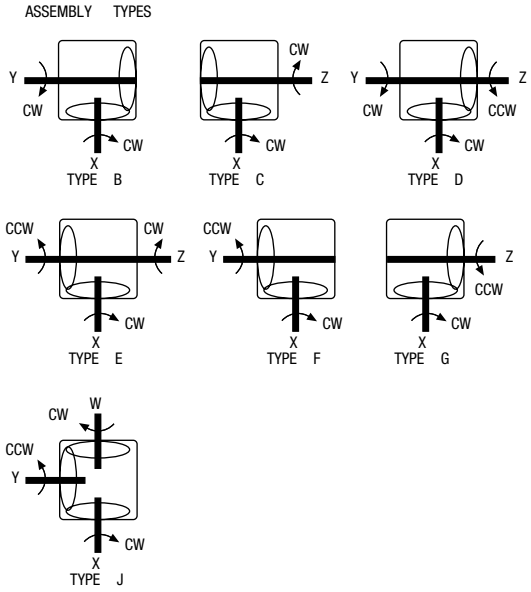

Oil Capacity – 72 ozs.

Approx. Wt. – "J" type – 85 Lbs. – All others – 72 Lbs.

Note: On other than 1:1 ratio, pinion (small gear) will always be on X shaft.

R1516 Series

Dimensions

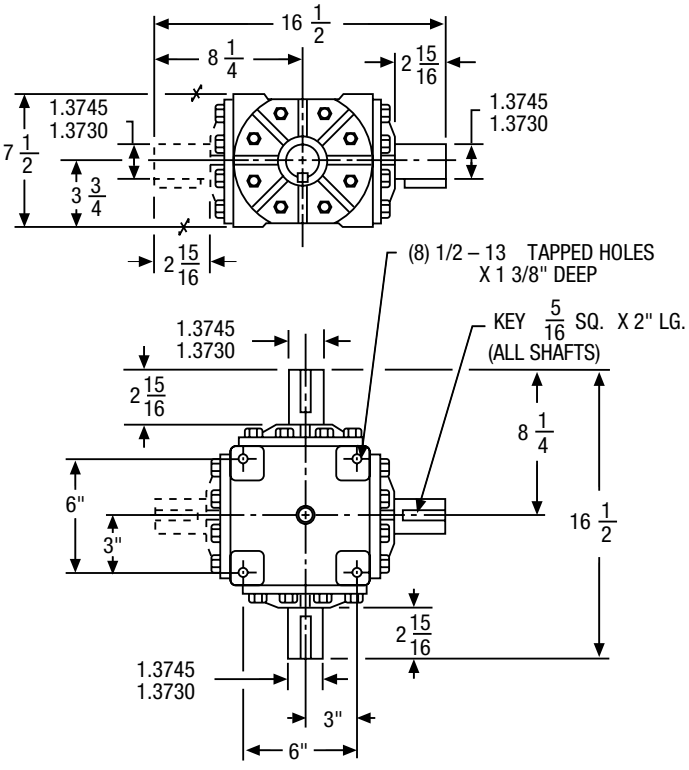

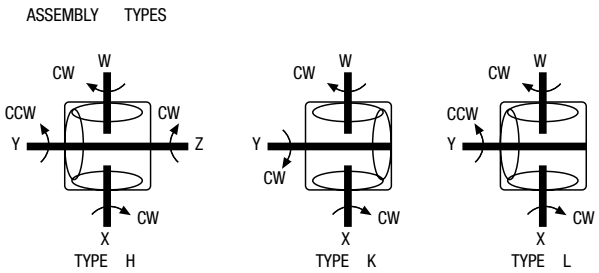

Oil Capacity – 72 ozs.

Approx. Wt. – 87 Lbs.

Note: On other than 1:1 ratio, pinion (small gear) will always be on X shaft.

CW and CCW notations indicate direction of shaft rotation when facing outer end of shaft extensions. The letters W, X, Y, Z are used to designate specific shaft extensions when ordering boxes with special shafts.

N

Notes



N

An economical alternative to a multi-reduction Reducer

THE MOTOR MULTIPLIER®

Multiplies your gear reducer ratio 5 times
Multiplies your savings with efficient planetary gearing



Planetary Ratio Multiplier



With Optional Base Kit



With 200 Series Helical Reducer



With 700 Series Worm Gear Speed Reducer

Features

- Multiplies Motor torque
- Rugged aluminum housing
- 5/8” and 7/8” shaft sizes (output)
- 3/4 maximum input horsepower (NEMA 56c face mounted motors)
- Efficient 5 to 1 ratio
- Easy to install
- Lubricated for LIfe

Applications

- Provides additional ratios for inventory flexibility
- Use with existing Gearbox To Create Double Reduction Ratios or Alone as a 5 to 1 reducer
- Compatible with most worm or helical gear flanged reducers, NEMA 56c design

Section Contents

Features / Applications 329

Catalog Number / Ordering Information 330

Dimensions 330

Torque Selection / Ratings 331-332

O

Planetary Ratio Multiplier

Order by catalog number

Output RPM	Ratio	Motor HP (1750 RPM Input)	OUTPUT		Multiplier Catalog Number
			HP	Torque (LB. INS)	
350	5	1/6	.14	25	FSP-5 OR FSP-5A
		1/4	.21	38	
		1/3	.29	53	
		1/2	.45	81	
		3/4	.69	124	

Dimensions

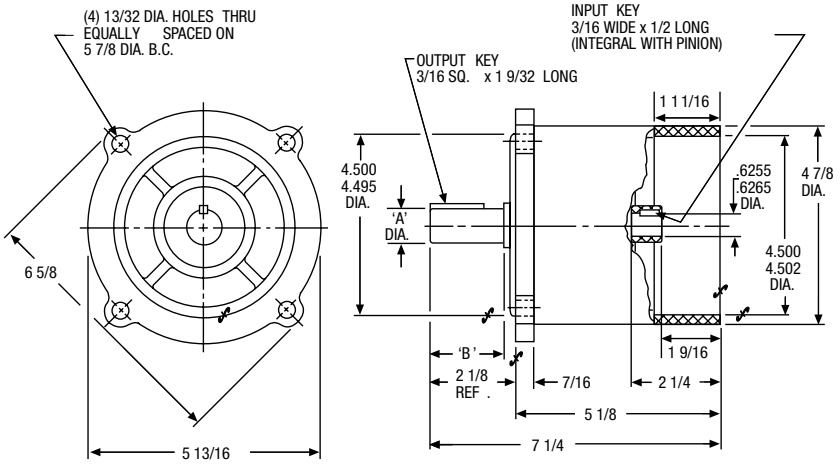

ALL DIMENSIONS IN INCHES

Item Code	Catalog Number	A Shaft Dia.	B Shaft Length
60634	FSP-5A	.6245	1-15/16
		.6240	
60632	FSP-5	.8745	2
		.8740	

Motor Multiplier Base Kit

Catalog Number - 47849

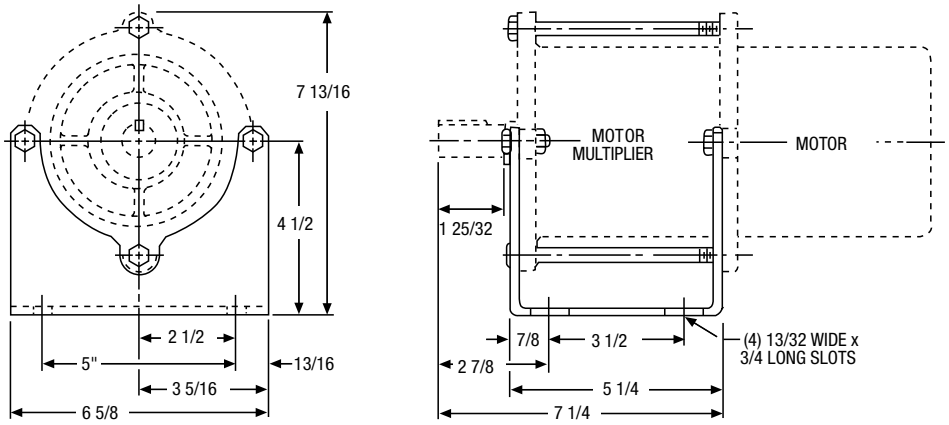

Output shaft may rotate in either direction. Rotation will be the same as the rotation of the motor shaft.

Torque Selection and Ratings for Motor Multiplier and Single Reduction Worm Gear Flanged Reducer Combinations

Output RPM	Total Ratio	Motor HP 1750 RPM	Flanged Reducer Output Rating						Motor Multiplier Catalog Number	Basic Flanged Reducer Size and Ratio
			S.F. 1.0		S. F. 1.25		S. F. 1.75			
			HP	Torque (LB. INS.)	HP	Torque (LB. INS.)	HP	Torque (LB. INS.)		
70	25	1/6	.09	78	.09	78	.09	78	FSP-5A	F713-5-B5
		1/4	.16	140	.16	140	.12	106	FSP-5A	F713-5-B5
		1/3	.23	207	.16	142	.12	106	FSP-5A	F713-5-B5
		1/3	.23	207	.23	204	.17	153	FSP-5A	F715-5-B5
		1/2	.34	306	.23	204	.17	153	FSP-5	F715-5-B7
		1/2	.34	306	.23	204	.17	153	FSP-5A	F715-5-B5
		1/2	.38	342	.29	257	.21	193	FSP-5	F718-5-B7
		1/2	.38	342	.38	342	.31	276	FSP-5	F721-5-B7
		3/4	.43	386	.29	257	.21	193	FSP-5	F718-5-B7
		3/4	.61	552	.41	368	.31	276	FSP-5	F721-5-B7
35	50	1/6	.08	152	.08	15	.07	133	FSP-5A	F713-10-B5
		1/4	.15	266	.10	177	.07	133	FSP-5A	F713-10-B5
		1/4	.15	266	.14	255	.11	192	FSP-5A	F715-10-B5
		1/3	.21	373	.14	255	.11	192	FSP-5A	F715-10-B5
		1/3	.22	396	.20	365	.15	274	FSP-5	F718-10-B7
		1/2	.30	548	.20	365	.15	274	FSP-5	F718-10-B7
		1/2	.37	662	.32	581	.24	436	FSP-5	F721-10-B7
		3/4	.48	872	.32	581	.24	436	FSP-5	F721-10-B7
		3/4	.59	1058	.39	705	.29	529	FSP-5	F724-10-B7
		3/4	.59	1058	.39	705	.29	529	FSP-5	F726-10-B7
23.3	75	1/6	.08	217	.07	183	.05	137	FSP-5A	F713-15-B5
		1/6	.08	217	.08	217	.07	198	FSP-5A	F715-15-B5
		1/4	.10	274	.07	183	.05	137	FSP-5A	F713-15-B5
		1/4	.15	395	.10	263	.07	198	FSP-5A	F715-15-B5
		1/4	.15	395	.14	376	.10	282	FSP-5A	F718-15-B5
		1/3	.21	564	.14	376	.10	282	FSP-5A	F718-15-B5
		1/3	.21	572	.22	599	.17	450	FSP-5A	F721-15-B5
		1/2	.33	898	.22	599	.17	450	FSP-5A	F721-15-B5
		1/2	.34	927	.33	889	.25	667	FSP-5	F724-15-B7
		3/4	.49	1334	.33	889	.25	667	FSP-5	F724-15-B7
		3/4	.57	1542	.38	1028	.29	771	FSP-5	F726-15-B7
17.5	100	1/6	.08	283	.06	207	.04	156	FSP-5A	F713-20-B5
		1/6	.08	283	.08	283	.06	227	FSP-5A	F715-20-B5
		1/4	.13	454	.08	303	.06	227	FSP-5A	F715-20-B5
		1/4	.14	493	.12	426	.09	320	FSP-5A	F718-20-B5
		1/3	.18	639	.12	426	.09	320	FSP-5A	F718-20-B5
		1/3	.21	748	.17	628	.13	471	FSP-5A	F721-20-B5
		1/2	.34	1238	.25	896	.19	672	FSP-5	F724-20-B7
		1/2	.34	1238	.33	1191	.25	893	FSP-5	F726-20-B7
		3/4	.56	1786	.33	1191	.25	893	FSP-5	F726-20-B7
		3/4	.59	1893	.37	1262	.28	945	FSP-5	F730-20-B7
		3/4	.56	2000	.37	1333	.28	1000	FSP-5	F732-20-B7

Planetary Ratio Multiplier

Torque Selection and Ratings for Motor Multiplier and Single Reduction Worm Gear Flanged Reducer Combinations

Output RPM	Total Ratio	Motor HP 1750 RPM	Flanged Reducer Output Rating						Motor Multiplier Catalog Number	Basic Flanged Reducer Size and Ratio
			S.F. 1.0		S. F. 1.25		S. F. 1.75			
			HP	Torque (LB. INS.)	HP	Torque (LB. INS.)	HP	Torque (LB. INS.)		
11.7	150	1/6	.06	320	.039	213	.029	160	FSP-5A	F713-30-B5
		1/6	.07	398	.06	312	.043	234	FSP-5A	F715-30-B5
		1/4	.12	660	.08	440	.06	330	FSP-5A	F718-30-B5
		1/4	.13	714	.12	628	.09	471	FSP-5A	F721-30-B5
		1/3	.18	972	.12	648	.09	486	FSP-5A	F721-30-B5
		1/3	.20	1056	.17	924	.13	693	FSP-5A	F724-30-B5
		1/2	.32	1733	.23	1227	.17	920	FSP-5	F726-30-B7
		3/4	.52	2281	.28	1520	.21	1140	FSP-5	F730-30-B7
		3/4	.52	2830	.35	1887	.26	1415	FSP-5	F732-30-B7
8.8	200	1/6	.06	454	.042	303	.031	227	FSP-5A	F715-40-B5
		1/6	.07	500	.06	426	.044	319	FSP-5A	F718-40-B5
		1/4	.12	893	.09	628	.07	471	FSP-5A	F721-40-B5
		1/4	.12	893	.12	893	.09	672	FSP-5A	F724-40-B5
		1/3	.18	1320	.12	896	.09	672	FSP-5A	F724-40-B5
		1/3	.18	1320	.17	1191	.12	893	FSP-5A	F726-40-B5
		1/2	.25	1786	.17	1191	.12	893	FSP-5	F726-40-B7
		1/2	.25	1786	.17	1191	.12	893	FSP-5A	F726-40-B5
		1/2	.28	1984	.18	1322	.14	992	FSP-5A	F730-40-B5
		1/2	.30	2183	.26	1887	.20	1415	FSP-5	F732-40-B7
		3/4	.37	2667	.25	1778	.19	1332	FSP-5	F730-40-B7
		3/4	.49	3543	.26	1887	.20	1415	FSP-5	F732-40-B7
7	250	1/6	.06	556	.041	371	.031	278	FSP-5A	F718-50-B5
		1/6	.07	590	.06	584	.05	438	FSP-5A	F721-50-B5
		1/4	.10	876	.06	584	.05	438	FSP-5A	F721-50-B5
		1/4	.12	1054	.10	865	.07	649	FSP-5A	F724-50-B5
		1/4	.12	848	.12	1054	.09	848	FSP-5A	F726-50-B5
		1/3	.14	1298	.10	865	.07	649	FSP-5A	F724-50-B5
		1/3	.17	1549	.13	1130	.09	848	FSP-5A	F726-50-B5
		1/2	.22	2060	.15	1373	.11	1030	FSP-5A	F730-50-B5
		3/4	.22	2313	.17	1542	.15	1156	FSP-5	F730-50-B7
		1/2	.28	2566	.27	2459	.20	1844	FSP-5	F732-50-B7
		3/4	.41	3688	.27	2459	.20	1844	FSP-5	F732-50-B7
		3/4	.46	4165	.31	2777	.23	2082	FSP-5	F738-50-B7
5.8	300	1/6	.049	534	.032	356	.024	267	FSP-5A	F721-60-B5
		1/6	.06	656	.05	560	.039	420	FSP-5A	F721-60-B5
		1/4	.08	841	.05	560	.039	420	FSP-5A	F721-60-B5
		1/4	.11	1177	.08	831	.06	623	FSP-5A	F724-60-B5
		1/4	.11	1177	.10	1085	.08	814	FSP-5A	F726-60-B5
		1/3	.15	1638	.10	1092	.08	819	FSP-5A	F726-60-B5
		1/2	.20	2248	.14	1500	.10	1125	FSP-5A	F730-60-B5
		1/2	.27	2858	.22	2360	.16	1770	FSP-5	F732-60-B7
		3/4	.43	4646	.29	3097	.22	2323	FSP-5	F738-60-B7

MVS Series

Boston Gear's Mechanical Variable Speed (MVS) Drives provide an alternative means of varying the output speed of an electric motor and/or speed reducer. These units are designed with a NEMA C-Face input and output to allow the easy installation between a speed reducer and motor. The MVS Series offers a variable speed range of 200 to 1200 RPM (6:1) when used with a 1750 RPM motor.



Features

- *Input HP Range – 1/4 to 10 (At 1750 RPM Input)*
- *Speed Range – 6:1*
- *Precise Operation*
- *Standard Double NEMA C-Face Mountings*
- *Quiet, Smooth Operation*
- *Extended Life Lubricant Included with Each Unit*
- *High Performance, Low Wear Design*
- *Handwheel Available with Optional Turns Indicator*

Bost-Kleen™ Wash Down

- Includes all the standard MVS Series features
- Durable white epoxy finish
- Washable & Scrubbable
- Corrosion resistant

Section Contents

Product Features **333**

Principle of Operation **334**

Selection Procedure **335-336**

Dimensions **337**

Mechanical Variable Speed Drives

Principle of Operation

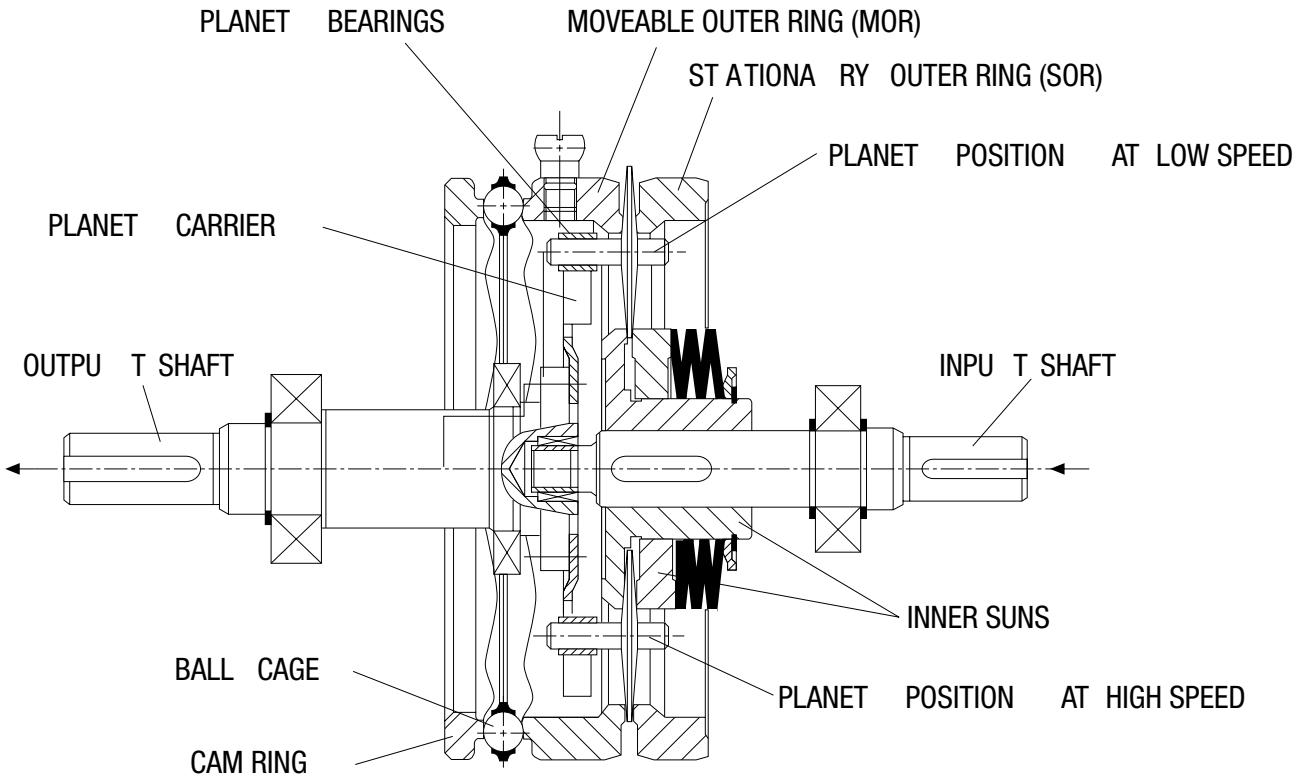

Operation

The input shaft drives the inner sun. The two halves of the inner suns are compressed together with cup springs creating force against the planets. The planets also contact the outer rings which are fixed within the housing. The axles of the planets are connected to the planet carrier and output shaft by bearings fitted into slots in the planet carrier. When the input shaft turns the inner sun, the planets rotate against the outer rings, thereby causing the planet carrier and output shaft to rotate.

How Speed Changes

Turning the handwheel causes the moveable outer ring (MOR) to turn. The MOR and the fixed cam ring are separated by the ball cage. The double cam action between the MOR and the fixed cam ring causes the MOR to shift axially as it rotates. The tapered planets are forced into the inner sun as the MOR shifts toward the stationary outer ring (SOR), or allows the spring action of the inner suns to force the planets away from the center line as the MOR shifts away from the SOR. Slots in the planet carrier allow the planets to move radially closer to or further from the center line. This movement, relative to the center line, alters the effective pitch diameter of the planets and the output speed. The drive may be shifted to low speed without shaft rotation, but the drive must be rotating in order to shift to a higher speed.

Required Information

Power (HP) or Torque (LB. IN.) to be transmitted.

1. Range of speed required.
2. Average hours of operation per day.
3. Type of load.
4. Service Factor per Table below.

Selection Procedure

1. Select Service Factor

Service Factors			
Load Characteristics	Average Operating Hours/Day		
	Up to 8	8-16	16-24
Uniform load and continuous operation No reversal Light inertia load	1.0	1.1	1.2
Medium shock, intermittent operation Frequent start and frequent reversal Medium inertia load	1.3	1.4	1.5
Heavy shock, intermittent operation Frequent start and frequent reversal	1.7	1.8	1.9

2. Calculate Design Torque

The design torque can be obtained by multiplying the torque to be transmitted by the appropriate service factor given in the Table.

Design Torque = T x Service Factor

If the power (HP) to be transmitted is known in advance, the design torque can be calculated by the following formulas:

$$T = \frac{63025 \times HP}{N}$$

T = Torque to be transmitted (LB. IN.)
HP = Power to be transmitted (HP)
N = Output speed (RPM) at highest speed for constant torque load and lowest speed for constant horsepower

3. Select Unit Size.

Select the most suitable size to ensure that the allowable output torque will always be greater than the design torque. Size selection may be obtained from the Selection Chart or from the selection guide at right.

4. Check Overhung Load.

When coupling the shafts of the unit with a motor or the driven machine, check the allowable thrust and overhung load, not to exceed values listed in the Table.

Permissible Loads (Lbs.)		
Model	Overhung	Thrust
FMVS0033F-B5	55	85
FMVS0075F-B5	110	155
FMVS0150F-B5	165	265
FMVS0200F-B7	310	380
FMVS0300F-B9	400	515
FMVS0500F-B9	400	515
FMVS1000F-B11	785	785

Overhung load is at centerline of the output shaft projection and with no thrust. When there is combined radial and thrust loading developed, the maximum allowable thrust load must NOT EXCEED 20% of the thrust load rating shown above.

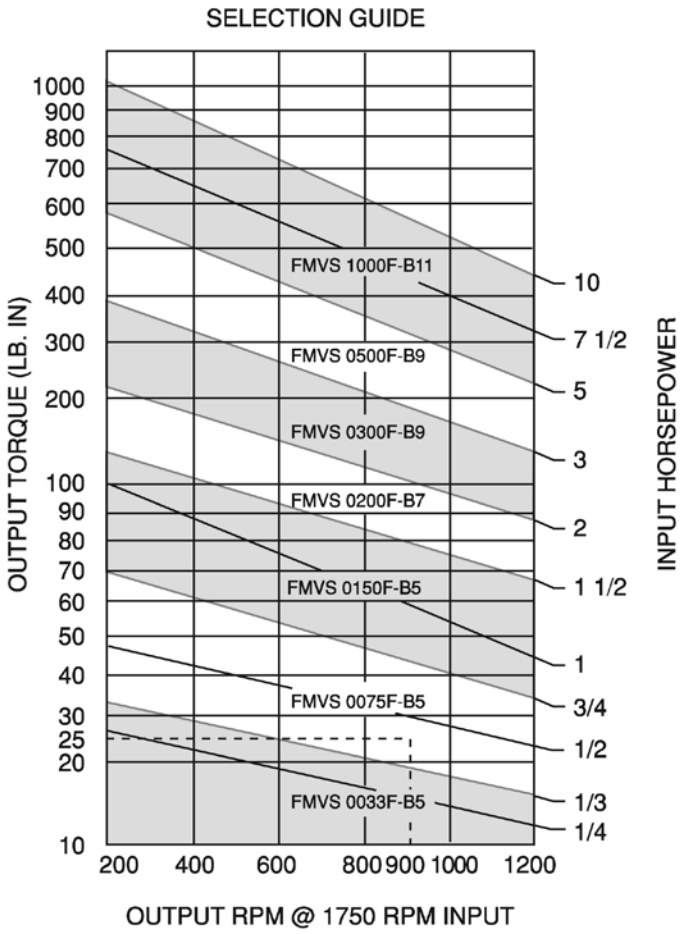

Using determined output torque and RPM, select desired unit.

EXAMPLE:

25 LB. IN. output torque at 900 RPM, select FMVS0075F-B5 using 1/2 Horsepower motor.

Mechanical Variable Speed Drives

Selection Chart

ORDER BY CATALOG NUMBER OR ITEM CODE

Catalog Number	Item Code	NEMA Mounting	Bore Code	Motor HP (1750 RPM)	Output @ 1750 RPM Input				
					Speed Range (RPM)		Torque (lb. in.)		
					Max.	Min.	Max. RPM	Min. RPM	Max. HP†
FMVS0033F-B5	48114	56C	B5	1/4	1155	190	12	27	.22
				1/3	1155	190	16	35	.29
FMVS0075F-B5	48115	56C	B5	1/2	1200	200	22	47	.42
				3/4	1200	200	33	70	.63
FMVS0150F-B5	48116	56C	B5	1	1175	200	44	105	.82
				1-1/2	1175	200	66	140	1.2
FMVS0200F-B7	48117	145TC	B7	2	1140	200	90	210	1.6
FMVS0300F-B9	48118	184TC	B9	3	1200	210	135	390	2.6
FMVS0500F-B9	48119	184TC	B9	5	1200	210	220	566	4.2
FMVS1000F-B11	48120	213TC	B11	7-1/2	1200	235	330	773	6.3
				10	1200	235	440	1030	8.4

MOTORS NOT INCLUDED, MUST BE ORDERED SEPARATELY.

† Speed reducer selection should be predicated on maximum output HP and minimum RPM ratings of MVS Series Drive.

Washdown Application - All units can be supplied painted with a durable white epoxy finish for washdown applications - Order with a BK Prefix i.e.: BKFMVS0075F-B5

Optional Handwheel with Turns Indicator —

Note: Units are standard with a non-indicator handwheel.

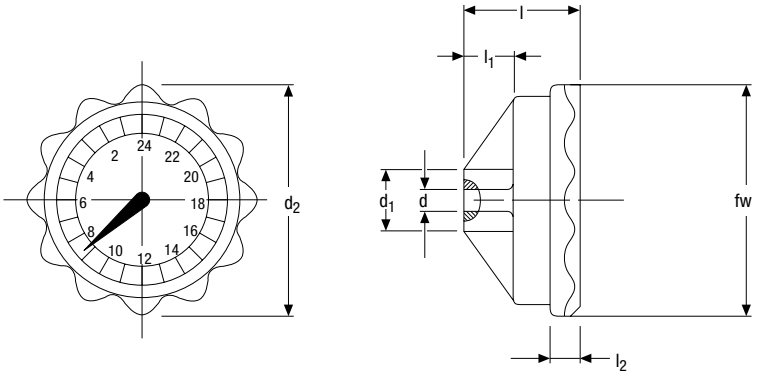

ALL DIMENSIONS IN INCHES

Catalog Number	Item Code	For Use With	d +0.001	d1	d2	l	l1	l2	w	Ratio
FMVSIND 33	48121	0033, 0075	0.315	0.79	2.05	1.69	0.55	0.75	2.76	12/18*
FMVSIND 500	48122	0150–0500	0.394	1.18	3.43	2.17	0.71	0.98	4.13	24
FMVSIND 1000	48123	1000	0.591	0.98	3.43	2.17	0.91	0.59	6.30	36

* 12=0033
18=0075

Dimensions

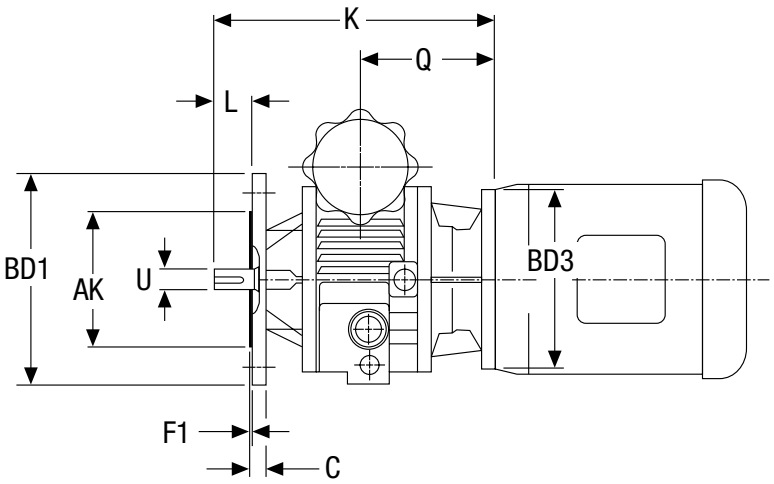

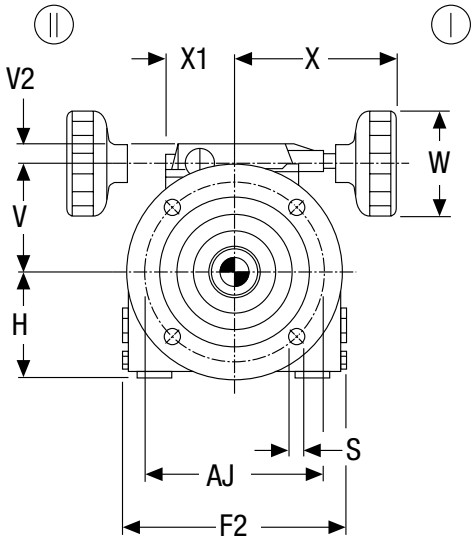

Mounting (I) Standard, Mounting (II) can be accomplished by easily rotating handwheel assembly

NOTE: Motor supplied separately

ALL DIMENSIONS IN INCHES

Type	Motor Frame Size	Output Flange	BD1	BD3	AK +.000 –.003	C	U +.0000 –.0005	AJ	F1	F2
FMVS0033F-B5	56C	56C	6.50	6.50	4.500	.39	.6250	5.875	.125	5.91
FMVS0075F-B5	56C	56C	6.50	6.50	4.500	.39	.6250	5.875	.125	6.89
FMVS0150F-B5	56C	56C	6.50	6.50	4.500	.39	.6250	5.875	.125	8.46
FMVS0200F-B7	145TC	145TC	6.50	6.50	4.500	.47	.8750	5.875	.125	9.96
FMVS0300F-B9	184TC	184TC	9.00	9.00	8.500	.39	1.1250	7.250	.276	12.01
FMVS0500F-B9	184TC	184TC	9.00	9.00	8.500	.39	1.1250	7.250	.276	12.01
FMVS1000F-B11	215TC	215TC	9.00	9.00	8.500	.71	1.3750	7.250	.276	14.92

ALL DIMENSIONS IN INCHES

Type	H	K	L	Q	S	V	V2	W	X	X1	Weight (lbs)*
FMVS0033F-B5	2.56	8.68	1.875	4.23	3/8–16	3.27	.55	2.76	4.13	1.69	19.8
FMVS0075F-B5	3.27	9.53	1.875	4.65	3/8–16	3.39	.55	2.76	4.13	1.69	39.6
FMVS0150F-B5	3.86	10.83	1.875	5.04	3/8–16	4.06	.67	4.13	5.98	2.48	57.2
FMVS0200F-B7	4.80	12.44	2.250	5.67	3/8–16	4.84	.67	4.13	5.98	2.48	88.0
FMVS0300F-B9	5.71	15.59	2.750	7.40	1/2–13	5.87	.67	4.13	5.98	2.48	160.6
FMVS0500F-B9	5.71	15.59	2.750	7.40	1/2–13	5.87	.67	4.13	5.98	2.48	160.6
FMVS1000F-B11	6.93	16.55	2.756	8.27	1/2–13	7.48	1.02	6.30	7.68	4.37	286.0

* without motor

Notes

P





Q

Boston Gear's application engineers are readily available to assist with the initial planning and application analysis and specification of components. Combinations of options, interfacing with equipment external to the drives and proper selection of reducers and other auxiliary components are typical of the possibilities available to satisfy the most complex applications.

NOTE: All performance specifications listed in this catalog are based on steady state operating conditions; i.e. ambient temperature, line voltage, motor frame temperature, etc.

Section Contents

Product Descriptions 339

Numbering System 340

Quick Selection Chart 341-342

AC DripProof & Totally Enclosed Motors 343

DC Totally Enclosed Motors 346

Motor Dimensions . . . . . 344-355 and 347

Bost-Kleen Speed Reducers/Motors 348

NEMA C-Face Motors

Catalog Numbering System

AC MOTORS

HP	VOLTAGE	ENCL	SUFFIX	MANUFACTURER
A - 1/20 **AA** - 1/12 **C** - 1/6 **D** - 1/4 **E** - 1/3 **F** - 1/2 **G** - 3/4 **H** - 1 **J** - 1-1/2 **K** - **2** **L** - 3 **M** - 5 **N** - 7-1/2 **P** - 10 **R** - 15 **S** - 20	**R** - 115/230-1-60 **S** - 115-1-60 **T** - 230-1-60 **U** - 230/460-3-60 **Y** - 575-3-60	**T** - TENV **TF** - TEFC	**B** - BRAKE **35** - 3450 RPM **11** - 1150 RPM	**B** - BALDOR **W** - WEG

PM MOTORS

SERIES DESIGNATION	VOLTAGE	HP	ENCL	MANUFACTURER
PM- Permanent Magnet	**9** - 90VDC **18** - 180VDC	**16** - 1/6 **25** - 1/4 **33** - 1/3 **50** - 1/2 **75** - 3/4 **100**- 1 **150**- 1-1/2 **200**- 2 **300**- 3 **500**- 5	**T, A** - TENV **TF, ATF** - TEFC	**B** - BALDOR **BLANK** - Boston Gear

Letters after dash indicate manufacturer:
B = Baldor
W = WEG
Blank = Boston Gear

Catalog Number Example: FUTF-W
1/2 HP, 230/460-3-60, TEFC, Boston Gear

Catalog Number Example: PM916AT-B
Permanent Magnet, 90VDC, 1/6 HP, TENV, Baldor

NEMA Motor Bolt Circle Dimensions

(Special) End Mounted

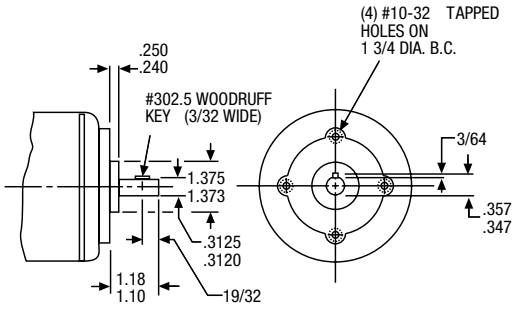

All Listed NEMA Frames

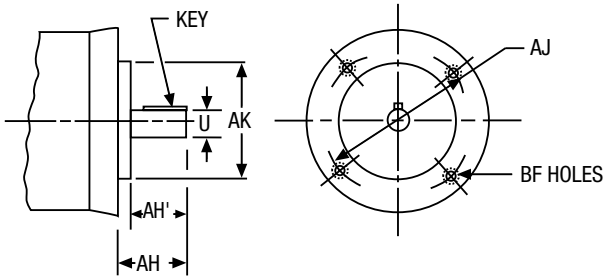

All DIMENSIONS IN INCHES

Bore Code	NEMA Mounting.	U	AK	MAX. AH	MAX. AH1	KEY SQ.	KEY LG.	AJ	BF
B4	42CZ	.5000 .4995	3.000 2.997	1 5/16	—	1/8	3/4	3 3/4	1/4-20
B5	56C	.6250 .6245	4.500 4.497	2 5/32	—	3/16	1 3/8	5 7/8	3/8-16
B7	182C 184C	.8750 .8745	4.500 4.497	2 5/32	—	3/16	1 3/8	5 7/8	3/8-16
	143TC 145TC								
B9	213C 215C	1.1250 1.1245	8.500 8.497	—	2 25/32	1/4	1 3/4	7 1/4	1/2-13
	182TC 184TC								
B11	254UC 256UC	1.3750 1.3745	8.500 8.497	—	3 17/32	5/16	2 3/8	7 1/4	1/2-13
	213TC 215TC								
B13	254TC 256TC	1 .6250 1.6240	8.500 8.497	—	3 13/16	3/8	2 7/8	7 1/4	1/2-13

Flanged reducers are designed for use with motors having NEMA "C" face and shaft dimensions as shown. AH and AH' must not be exceeded.

@ 1750 RPM Input

HP (Motor)	RPM † (Range)	Torque (Maximum) (LB. IN.)	Flange Reducers**	Motors	
				AC †	DC †
1/6	350-12	27	**F710-5**	**ACUT* CUTF**	**APM916 PM916**
	175-6	53	**F710-10**		
	117-4	77	**F710-15**		
	88-3	98	**F710-20**		
	70-2.5	117	**F713-25**		
	58-2	132	**F713-30**		
		139	**F710-30**		
	44-1.5	128	**F710-40**		
		178	**F713-40**		
	35-1.2	120	**F710-50**		
		210	**F715-50**		
	29-1	223	**F718-60**		
1/4	350-12	41	**F710-5**	**ADUFT* DUFT**	**APM925 PM925**
	175-6	80	**F710-10**		
	117-4	116	**F710-15**		
	88-3	130	**F710-20**		
		148	**F713-20**		
	70-2.5	175	**F713-25**		
	58-2	208	**F713-30**		
	44-1.5	266	**F715-40**		
	35-1.2	315	**F715-50**		
	29-1	335	**F718-60**		
1/3	350-12	55	**F710-5**	**AEUTF* EUTF**	**APM933* PM933**
	175-6	107	**F710-10**		
	117-4	155	**F713-15**		
	88-3	197	**F713-20**		
	70-2.5	234	**F713-25**		
	58-2	277	**F715-30**		
	44-1.5	355	**F715-40**		
	35-1.2	420	**F718-50**		
	29-1	440	**F718-60**		
1/2	350-12	82	**F713-5**	**FUTF**	**PM950**
	175-6	160	**F713-10**		
	117-4	232	**F713-15**		
	88-3	295	**F715-20**		
	70-2.5	350	**F715-25**		
	58-2	416	**F718-30**		
	44-1.5	533	**F721-40**		
	35-1.2	630	**F721-50**		
	29-1	670	**F721-60**		
3/4	350-12	123	**F713-5**	**GUTF**	**PM975**
	175-6	240	**F715-10**		
	117-4	348	**F715-15**		
	88-3	443	**F718-20**		
	70-2.5	526	**F721-25**		

** For Flanged Reducer w/coupling specify RF Model.

† Speed range shown demonstrates a 30 to 1 speed range which is typical when using a single phase DC Controller and Permanent Magnet Motor. Consult your Boston Gear distributor for your particular application.

Adjustable Speed Control Motors **Quick Selection Chart**

HP (Motor)	RPM † (Range)	Torque (Maximum) (LB. IN.)	Flange Reducers**	Motors	
				AC †	DC †
3/4 (CONT.)	58-2	624	**F721-30**	**GUTF**	**PM975**
	44-1.5	800	**F724-40**		
	35-1.2	945	**F724-50**		
	29-1	1004	**F726-60**		
1	350-12	165	**F713-5**	**HUTF**	**PM9100**
	175-6	320	**F718-10**		
	117-4	422	**F718-15**		
	88-3	590	**F721-20**		
	70-2.5	702	**F721-25**		
	58-2	832	**F724-30**		
	44-1.5	1066	**F726-40**		
	35-1.2	1260	**F726-50**		
	29-1	1340	**F730-60**		
1-1/2	350-12	256	**F715-5**	**JUTF**	**PM18150**
	175-6	460	**F718-10**		
	117-4	646	**F721-15**		
	88-3	886	**F724-20**		
	70-2.5	1056	**F724-25**		
	58-2	1247	**F726-30**		
	44-1.5	1598	**F730-40**		
	35-1.2	1890	**F732-50**		
	29-1	2009	**F732-60**		
2	350-12	328	**F718-5**	**KUTF**	**PM18200**
	175-6	640	**F721-10**		
	117-4	929	**F724-15**		
	88-3	1180	**F726-20**		
	70-2.5	1440	**F730-25**		
	58-2	1663	**F732-30**		
	44-1.5	2131	**F732-40**		
	35-1.2	2520	**F732-50F**		
	29-1	2678	**F738-60**		
3	350-12	491	**F724-5**	**LUTF**	**PM18300**
	175-6	960	**F726-10**		
	117-4	1393	**F730-15**		
	88-3	1771	**F730-20**		
	70-2.5	2150	**F732-25F**		
	58-2	2495	**F732-30F**		
	44-1.5	3196	**F738-40**		
	35-1.2	4016	**F738-50F**		
	29-1	4020	**RF752-60**		
5	175-6	1602	**F732-10**	**MUTF**	**PM18500**
	117-4	2230	**F732-15F**		
	88-3	2952	**F738-20**		
	58-2	4180	**RF752-30**		
	44-1.5	5328	**RF752-40**		
	35-1.2	6300	**RF752-50F**		
	29-1	7392	**RF760-60F**		

** For Flanged Reducer w/coupling specify RF Model.

† Speed range shown demonstrates a 30 to 1 speed range which is typical when using a single phase DC Controller and Permanent Magnet Motor. Consult your Boston Gear distributor for your particular application.

@ 1750 RPM Input

ORDER BY CATALOG NUMBER OR ITEM CODE

HP	NEMA Mounting	Bore Code †	Totally Enclosed*						Open Dripproof			
			115/230-1-60		208-230/460-3-60		575-3-60		115/230-1-60		208-230/460-3-60	
			Catalog Number	Item Code	Catalog Number	Item Code	Catalog Number	Item Code	Catalog Number	Item Code	Catalog Number	Item Code
1/20	SP	—	**AST-B****	65403	**—**	—	**—**	—	**—**	—	**—**	—
1/12	SP	—	**AAST-B****	65402	**—**	—	**—**	—	**—**	—	**—**	—
1/6	42CZ	B4	**ACRT-W**	65320	**ACUT-W**	65368	**—**	—	**—**	—	**—**	—
	42CZ	B4	**ACRTF-B**	69725	**ACUT-B**	69728	**—**	—	**—**	—	**—**	—
	56C 56C 56C	B5 B5 B5	**CRTF-W** **CRT-B** **CRTF-B**	65316 85775 85777	**CUTF-W** **CUT-B** **CUTF-B**	65371 85776 85778	**—** **—** **—**	— — —	**—** **CR-B** **—**	— 85773 —	**—** **CU-B** **—**	— 85774 —
1/4	42CZ 42CZ	B4 B4	**ADRT-W** **ADRTF-B**	65325 69726	**ADUT-W** **ADUTF-B**	65374 69729	**—** **—**	— — — —	**—** **—**	— —	**— —**	— —
	56C	B5	**DRTF-W** **DRTF-B** **DSTF-B**** **—**	65326 66199 66202	**DUTF-W** **DUTF-B** **—** **—**	65380 66205 — —	**—** **DYTF-B** **—** **—**	— 66208 — —	**—** **DR-B** **DS-B**** **—**	— 66109 66112 —	**—** **DU-B** **—** **—**	— 66115 — —
1/3	42CZ	B4	**AERT-W** **AERTF-B**	65346 69727	**AEUT-W** **AEUTF-B**	65381 69730	**—** **—**	— —	**—** **—**	— —	**—** **—**	— —
	56C 56C	B5 B5	**ERTF-W** **ERTF-B**	65348 66211	**EUTF-W** **EUTF-B**	65383 66214	**—** **EYTF-B**	— 66217	**—** **ER-B**	— 66121	**—** **EU-B**	— 66124
1/2	56C	B5	**FRTF-W** **FRTF-B**	65350 66219	**FUTF-W** **FUTF-B**	65404 66223	**—** **FYTF-B**	— 66226	**—** **FR-B**	— 66130	**—** **FU-B**	— 66133
3/4	56C	B5	**GRTF-W** **GRTF-B**	65351 66228	**GUTF-W** **GUTF-B**	65405 66231	**—** **GYTF-B**	— 66831	**—** **GR-B**	— 66139	**—** **GU-B**	— 66142
1	56C	B5	**HRTF-5/8-W** **HRTF-5/8-B**	65354 19178	**HUTF-5/8-W** **HUTF-5/8-B**	65406 50428	**—** **HYTF-5/8-B**	— 19179	**—** **HR-5/8-B**	— 19183	**—** **HU-5/8-B**	— 50427
	143TC	B7	**—** **HRTF-B**	— 66234	**HUTF-W** **HUTF-B**	65412 66237	**—** **HYTF-B**	— 66240	**—** **HR-B**	— 66145	**HU-W** **HU-B**	65249 66148
1-1/2	56C	B5	**—** **—**	**—** **—**	**JUTF-5/8-W** **JUTF-5/8-B**	65407 19784	**—** **—**	— —	**—** **—**	— —	**—** **—**	— —
	145TC	B7	**—** **JRTF-B**	66243	**JUTF-W** **JUTF-B**	65437 66246	**—** **JYTF-B**	— 66249	**—** **JR-B**	— 66154	**JU-W** **JU-B**	65251 66157
2	56C	B5	**—** **—**	**—** **—**	**KUTF-5/8-W** **KUTF-5/8-B**	65440 19785	**—** **—**	— —	**—** **—**	— —	**—** **—**	— —
	145TC	B7	**—** **—**	— —	**KUTF-W** **KUTF-B**	65445 66252	**—** **KYTF-B**	— 66255	**—** **—**	— —	**KU-W** **KU-B**	65256 66163
3	182TC	B9	**—** **—**	— —	**LUTF-W** **LUTF-B**	65446 66258	**—** **LYTF-B**	66260	**—** **—**	— —	**LU-W** **LU-B**	65257 66166
5	184TC	B9	**—** **—**	— —	**MUTF-W** **MUTF-B**	65448 66262	**—** **MYTF-B**	— 66264	**—** **—**	— —	**MU-W** **MU-B**	65258 66170
7-1/2	213TC	B11	**—**	—	**NUTF-B**	66266	**—**	—	**—**	—	**—**	—
10	215TC	B11	**—**	—	**PUTF-B**	66270	**—**	—	**—**	—	**—**	—
15	254TC	B13	**—**	—	**RUTF-B**	66274	**—**	—	**—**	—	**—**	—
20	256TC	B13	**—**	—	**SUTF-B**	66278	**—**	—	**—**	—	**—**	—

* T = TENV – Totally Enclosed, Non-ventilated.
** 115 Volt only.
TF = TEFC – Totally Enclosed, Fan Cooled.
† See Page 340 for Bore Code explanation.
Letters after dash indicate manufacturer — W = WEG.; B = Baldor

FOR DIMENSIONS OF THESE MOTORS, SEE PAGES 334 AND 335
FOR OTHER AVAILABLE MOTORS, CONSULT FACTORY OR REFER TO
BOSTON GEAR'S COMPLETE ELECTRICAL PRODUCTS CATALOG P-1525-BG.

Q

AC Open Dripproof Motor

Dimensions

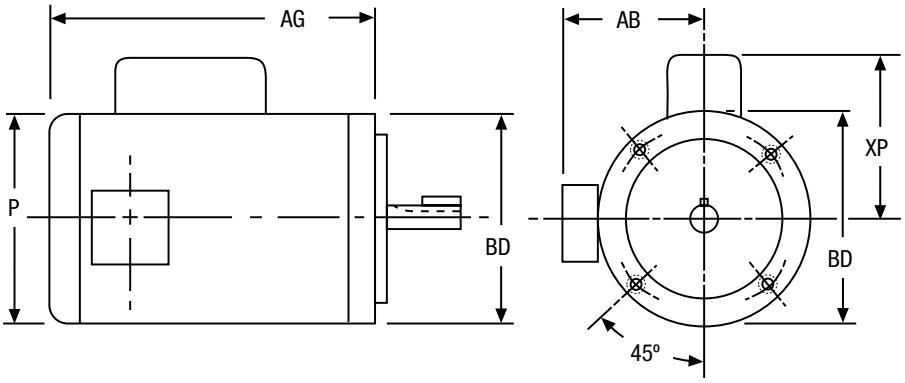

ALL DIMENSIONS IN INCHES

HP	NEMA MTG.	BORE CODE	-B (BALDOR) MOTORS						
			CATALOG NUMBER	ITEM CODE	AB	AG	BD	XP	P
1/20	SPL	SPL	**AST-B**	65403	—	6.56	4.51	—	4.62
1/12	SPL	SPL	**AAST-B**	65402	—	6.56	4.51	—	4.62
1/6	56C	B5	**CR-B**	85773	4.41	8.03	5.87	4.34	5.69
	56C	B5	**CU-B**	85774	4.41	8.03	5.87	—	5.69
1/4	56C	B5	**DR-B**	66109	4.41	8.68	5.87	4.34	5.69
	56C	B5	**DS-B**	66112	4.41	8.68	5.87	4.34	5.69
	56C	B5	**DU-B**	66115	4.41	8.68	5.87	—	5.69
1/3	56C	B5	**ER-B**	66121	4.41	8.68	5.87	4.34	5.69
	56C	B5	**EU-B**	66124	4.41	8.68	5.87	—	5.69
1/2	56C	B5	**FR-B**	66130	4.41	8.68	5.87	4.34	5.69
	56C	B5	**FU-B**	66133	4.41	8.68	5.87	—	5.69
3/4	56C	B5	**GR-B**	66139	5.62	10.00	6.50	5.02	6.62
	56C	B5	**GU-B**	66142	5.62	9.00	6.50	—	6.62
1	56C	B5	**HR-5/8-B**	19183	5.62	9.00	6.50	5.49	6.62
	56C	B5	**HU-5/8-B**	50427	5.62	9.00	6.50	—	6.62
	143TC	B7	**HR-B**	66145	5.09	9.00	6.50	5.49	6.62
	143TC	B7	**HU-B**	66148	5.12	9.00	6.50	—	6.62
1-1/2	145TC	B7	**JR-B**	66154	5.09	9.00	6.50	5.49	6.62
	145TC	B7	**JU-B**	66157	5.09	9.00	6.50	—	6.62
2	145TC	B7	**KU-B**	66163	5.09	10.00	6.50	—	6.62
3	182TC	B9	**LU-B**	66166	5.88	11.00	6.50	—	7.88

Note: See Page 340 for mounting and shaft dimensions.

Dimensions

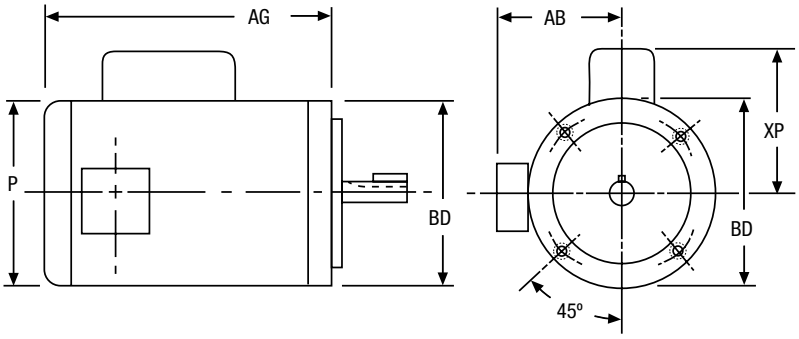

ALL DIMENSIONS IN INCHES

HP	NEMA MTG.	BORE CODE	WEG MOTORS							-B (BALDOR) MOTORS						
			CATALOG NUMBER	ITEM CODE	AB	AG	BD	XP	P	CATALOG NUMBER	ITEM CODE	AB	AG	BD	XP	P
1/6	56C	B5	**CRTF-W**	65316	5.43	9.04	6.54	4.13	7.32	**CRTF-B**	85777	4.90	9.29	5.81	4.41	5.68
	56C	B5	**CUTF-W**	65371	5.43	9.04	6.54	—	7.32	**CUTF-B**	85778	4.90	9.29	5.81	—	5.68
1/4	56C	B5	**DRTF-W**	65326	5.43	9.04	6.54	4.13	7.32	**DRTF-B**	66199	5.18	9.29	5.81	4.41	5.68
	56C	B5	**—**	—	—	—	—	—	—	**DSTF-B**	66202	4.51	9.29	5.81	4.41	5.68
	56C	B5	**DUTF-W**	65380	5.43	9.04	6.54	—	7.32	**DUTF-B**	66205	4.51	9.29	5.81	4.41	5.68
	56C	B5	**—**	—	—	—	—	—	—	**DYTF-B**	66208	4.53	9.29	5.81	—	5.68
1/3	56C	B5	**ERTF-W**	65348	5.43	9.04	6.54	4.13	7.32	**ERTF-B**	66211	4.51	9.29	5.81	4.41	5.68
	56C	B5	**EUTF-W**	65383	5.43	9.04	6.54	—	7.32	**EUTF-B**	66214	4.51	9.29	5.81	—	5.68
	56C	B5	**EYTF-W**	65454	5.43	9.04	6.54	—	7.32	**EYTF-B**	66217	4.51	9.29	5.81	—	5.68
1/2	56C	B5	**FRTF-W**	65350	5.43	9.04	6.54	4.13	7.32	**FRTF-B**	66219	4.51	9.94	5.81	4.41	5.68
	56C	B5	**FUTF-W**	65404	5.43	9.04	6.54	—	7.32	**FUTF-B**	66223	4.51	9.32	5.81	—	5.68
	56C	B5	**FYTF-W**	65455	5.43	9.04	6.54	—	7.32	**FYTF-B**	66226	4.51	9.32	5.81	—	5.68
3/4	56C	B5	**GRTF-W**	65351	5.43	9.04	6.54	4.13	7.32	**GRTF-B**	66228	4.51	11.29	5.81	5.08	5.68
	56C	B5	**GUTF-W**	65405	5.43	9.04	6.54	—	7.32	**GUTF-B**	66231	4.51	9.32	5.81	—	5.68
	56C	B5	**GYTF-W**	65457	5.43	9.04	6.54	—	7.32	**GYTF-B**	66831	5.22	10.19	6.50	—	6.62
1	56C	B5	**HRTF-5/8-W**	65354	5.43	10.22	6.54	—	7.32	**HRTF-5/8-B**	19178	4.90	11.29	5.81	5.56	5.68
	56C	B5	**HUTF-5/8-W**	65406	5.43	10.22	6.54	—	7.32	**HUTF-5/8-B**	50428	5.22	10.82	6.50	—	5.68
	56C	B5	**—**	—	—	—	—	—	—	**HYTF-5/8-B**	19179	5.22	10.19	6.50	—	6.62
	143TC	B7	**—**	—	—	—	—	—	—	**HRTF-B**	66234	5.22	11.19	6.50	5.56	6.62
	143TC	B7	**HUTF-W**	65412	5.43	10.95	6.54	—	7.32	**HUTF-B**	66237	4.51	10.19	5.81	—	6.62
	143TC	B7	**—**	—	—	—	—	—	—	**HYTF-B**	66240	5.22	10.19	6.50	—	6.62
1-1/2	56C	B5	**JUTF-5/8-W**	65407	5.43	10.22	6.54	—	7.32	**JUTF-5/8-B**	19784	5.22	10.19	6.50	—	6.62
	145TC	B7	**—**	—	—	—	—	—	—	**JRTF-B**	66243	5.22	11.17	6.50	5.56	6.62
	145TC	B7	**JUTF-W**	65437	5.43	10.95	6.54	—	7.32	**JUTF-B**	66246	5.22	11.17	6.50	—	6.62
	145TC	B7	**JYTF-W**	65475	5.43	10.95	6.54	—	7.32	**JYTF-B**	66249	5.22	11.17	6.50	—	6.62
2	56C	B5	**KUTF-5/8-W**	65440	5.43	11.40	6.54	—	7.32	**—**	—	—	—	—	—	—
	145TC	B7	**KUTF-W**	65445	5.43	12.13	6.54	—	7.32	**KUTF-B**	66252	5.22	11.17	6.50	—	6.62
	145TC	B7	**—**	—	—	—	—	—	—	**KYTF-B**	66255	5.22	11.17	6.50	—	6.62
3	182TC	B9	**LUTF-W**	65446	6.61	13.24	8.88	—	8.75	**LUTF-B**	66258	6.00	13.93	8.86	—	7.88
			—	—	—	—	—	—	—	**LYTF-B**	66260	6.00	13.93	8.86	—	7.88
5	184TC	B9	**MUTF-W**	65448	6.61	13.24	8.88	—	8.75	**MUTF-B**	66262	6.00	15.43	8.86	—	7.88
7-1/2	213TC	B11	**—**	—	—	—	—	—	—	**NUTF-B**	66266	7.45	15.53	9.04	—	9.56
10	215TC	B11	**—**	—	—	—	—	—	—	**PUTF-B**	66270	7.45	16.67	9.04	—	9.56
15	254TC	B13	**—**	—	—	—	—	—	—	**RUTF-B**	66274	9.22	16.67	9.10	—	9.56

Note: See page 340 for mounting and shaft dimensions.
T = Totally-enclosed, non-ventilated.
TF = Totally-enclosed, fan cooled.

Permanent Magnet Totally Enclosed 1750 RPM Motors

ORDER BY CATALOG NUMBER OR ITEM CODE

HP	NEMA MTG.	BORE CODE †	CATALOG NUMBER*	ITEM CODE
1/6	56C	B5	**PM916AT-B**	19120
			PM916T	59476
1/4	56C	B5	**PM925AT-B**	19121
			PM925T	59478
1/3	56C	B5	**PM933AT-B**	19122
			PM933T	59480
1/2	56C	B5	**PM950AT-B**	19123
			PM950TF	59481
			PM1850TF-B	19186
			PM1850TF	59482

* AT, T = TENV – Totally Enclosed, Non-ventilated.
TF = TEFC – Totally Enclosed, Fan Cooled.
† See Page 340 for Bore Code explanation.
PM9-90 VDC (Armature Voltage)
PM18-180 VDC (Armature Voltage)

Letters after dash indicate manufacturer – B = Baldor
Blank = Boston Gear

ORDER BY CATALOG NUMBER OR ITEM CODE

HP	NEMA MTG.	BORE CODE †	CATALOG NUMBER*	ITEM CODE
3/4	56C	B5	**PM975TF-B**	69853
			PM975TF	59483
			PM1875TF-B	69866
			PM1875TF	59484
1	56C	B5	**PM9100TF-5/8-B**	50421
			PM9100TF-5/8	59486
			PM18100TF-5/8-B	50424
			PM18100TF-5/8	59488
	56CZ	B7	**PM9100TF-B**	69867
			PM9100TF	59485
			PM18100TF-B	69869
			PM18100TF	59487
1-1/2	56CZ	B7	**PM18150TF-B**	69870
	140TC	B7	**PM18150TF**	59489
2	56CZ	B7	**PM18200TF-B**	68783
	140TC	B7	**PM18200TF**	59490
3	184TC	B9	**PM18300TF-B**	69411
5	1810ATC	B9	**PM18500TF-B**	69412

ENCLOSURES—Most applications can utilize open dripproof motors; other enclosures are listed. For information purposes, the various enclosures are defined below.

OPEN, DRIPPROOF—Same as open, except the construction of motor prevents the entrance of drops of liquid or particles falling on the motor at any angle not greater than 15 degrees from vertical.

TOTALLY-ENCLOSED—A motor so constructed as to prevent free exchange of air between the inside and outside of the motor case, but not air-tight.

TOTALLY-ENCLOSED, NON–VENTILATED (TENV)—A totally-enclosed motor with openings closed and of sufficient size and mass to permit the necessary heat dissipation to eliminate the need for external cooling.

TOTALLY-ENCLOSED, FAN-COOLED (TEFC)—Basically a TENV motor which has an external fan to blow cooling air over the motor. The additional cooling eliminates the necessity of a more costly oversized TENV motor.
NOTE: TENV and TEFC construction are equal in all respects regarding application, temperature capabilities and performance.

FOR DIMENSIONS OF THESE MOTORS, SEE PAGE 347.
FOR OTHER AVAILABLE MOTORS, CONSULT FACTORY.

Dimensions

ALL DIMENSIONS IN INCHES

HP	NEMA MTG.	BORE CODE	CATALOG NUMBER	AG	BD	XP	P	D
1/6	56C	B5	**PM916T**	7.13	6.50	4.47	4.87	3.50
1/4	56C	B5	**PM925T**	7.66	6.50	4.47	4.87	3.50
1/3	56C	B5	**PM933T**	8.13	6.50	4.47	4.87	3.50
1/2	56C	B5	**PM950TF**	9.75	6.50	4.47	4.87	3.50
	56C	B5	**PM1850TF**	9.75	6.50	4.47	4.87	3.50
3/4	56C	B5	**PM975TF**	12.25	6.50	4.47	4.87	3.50
	56C	B5	**PM1875TF**	11.75	6.50	4.47	4.87	3.50
1	56CZ	B7	**PM9100TF**	14.25	6.50	4.87	5.61	3.50
	56C	B5	**PM9100TF-5/8**	14.25	6.50	4.87	5.61	3.50
	56CZ	B7	**PM18100TF**	13.25	6.50	4.87	5.61	3.50
	56C	B5	**PM18100TF-5/8**	13.25	6.50	4.87	5.61	3.50
1-1/2	140TC	B7	**PM18150TF**	16.21	6.50	5.31	6.50	3.50
2	140TC	B7	**PM18200TF**	17.21	6.50	5.31	6.50	3.50

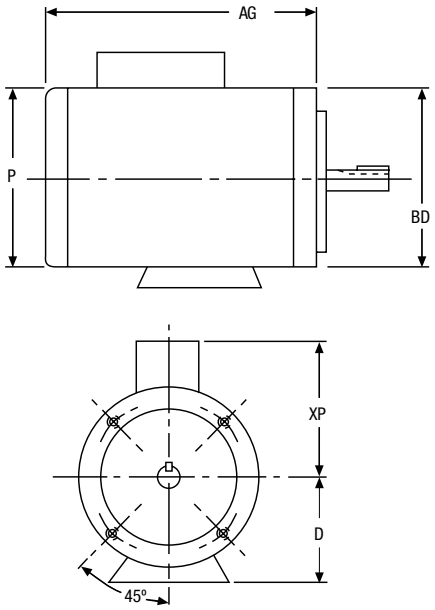

Note: See page 340 for mounting and shaft dimensions.

ALL DIMENSIONS IN INCHES

HP	NEMA MTG.	BORE CODE	-B (BALDOR) MOTORS					
			CATALOG NUMBER	AG	BD	XP	P	D
1/6	56C	B5	**PM916AT-B**	8.25	6.50	4.56	4.69	3.50
1/4	56C	B5	**PM925AT-B**	9.19	6.50	4.56	4.69	3.50
1/3	56C	B5	**PM933AT-B**	10.13	6.50	4.56	4.69	3.50
1/2	56C	B5	**PM950AT-B**	11.88	6.50	4.56	4.69	3.50
	56C	B5	**PM1850TF-B**	10.56	6.63	4.00	4.87	3.50
3/4	56C	B5	**PM975TF-B**	11.69	6.63	4.00	5.81	3.50
	56C	B5	**PM1875TF-B**					
1	56CZ	B7	**PM9100TF-B**	12.57	6.63	4.00	5.81	3.50
	56C	B5	**PM9100TF-5/8-B**					
	56CZ	B7	**PM18100TF-B**					
	56C	B5	**PM18100TF-5/8-B**					
1-1/2	56CZ	B7	**PM18150TF-B**	15.06	6.63	4.25	6.50	3.50
2	56CZ	B7	**PM18200TF-B**	16.06	6.63	4.25	6.50	3.50
3	184TC	B9	**PM18300TF-B**	21.46	9.00	6.06	7.88	4.50
5	1810ATC	B9	**PM18500TF-B**	25.46	9.00	6.06	7.88	4.50

AC Bost-Kleen Washdown Duty Motors

White Bost-Kleen Motors

- AC Motors 1/2 - 5 HP
- DC Motors 1/4 - 3/4 HP
- Durable White Epoxy Finish
- Gasketed Thru Bolts
- Weep Holes
- NEMA C-Face Mounting
- BISSC certified



Designed for food processing and other corrosive applications where the motor is constantly exposed to an environment requiring high pressure washdown to maintain cleanliness.

Q

WHITE BISSC CERTIFIED MOTORS	HP	Catalog Number	Item Code	NEMA Mounting	Enclosure
AC MOTORS 230/460 VAC 3 PHASE 60 HZ	1/2	**FUT-WB-B**	69105	56C	TENV
	3/4	**GUT-WB-B**	69106	56C	TENV
	1	**HUT-5/8-WB-B**	69123	56C	TENV
	1	**HUT-WB-B**	69107	143TC	TENV
	1-1/2	**JUTF-WB-B**	69110	145TC	TEFC
	2	**KUTF-WB-B**	69111	145TC	TEFC
	3	**LUTF-WB-B**	69112	182TC	TEFC
	5	**MUTF-WB-B**	69113	184TC	TEFC

Dimensions

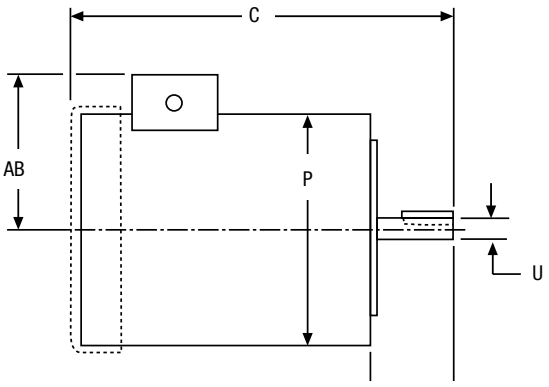

HP	Catalog Number	U +.0000 -.0005	C	AH	P	AB
1/2	**FUT-WB-B**	.6250	11.06	2.06	6.62	5.25
3/4	**GUT-WB-B**	.6250	12.12	2.06	6.62	5.25
1	**HUT-5/8-WB-B**	.6250	12.12	2.06	6.62	5.25
1	**HUT-WB-B**	.8750	12.12	2.13	6.62	5.25
1-1/2	**JUTF-WB-B**	.8750	13.30	2.13	6.62	5.25
2	**KUTF-WB-B**	.8750	12.30	2.13	6.62	5.25
3	**LUTF-WB-B**	1.1250	16.55	2.63	7.88	5.88
5	**MUTF-WB-B**	1.1250	16.55	2.63	7.88	5.88

These double C-Face Brakes are direct acting with only one moving part. They are spring set and electro-magnetically released. Movement is limited to a spring loaded pressure plate. Release is instantaneous. If power fails, the brake will immediately set and hold.



Features

- Automatic Reset
- Compact
- Continuous Duty
- Dependable
- Full Torque Stop
- Horizontal/Vertical Mount
- Instant Magnetic Release
- One Moving Part
- Ready to Mount
- Shock Mounted Magnet
- Direct Acting
- Flange/Foot Mounting
- Splined Hub
- Standard NEMA Voltages/Frequencies
- Superior Disc Life
- Superior Thermal Capacity
- Double C-Face

Operation

Friction discs rotate with the motor shaft and are free to move axially on the hub. When the magnet coil is de-energized, a spring loaded pressure plate (magnet armature) presses against the rotating discs. Friction force stops and holds the motor shaft.

The pressure plate retracts against torque springs by magnetic force when the magnet is energized. Friction discs are then released and free to rotate with the hub and motor shaft. A manual release is also provided.

Brake coil leads connect directly to motor leads so that power is simultaneously supplied to both brake and motor. No control equipment is required. An instruction bulletin on mounting and hookup are included with each brake.

Splined Hub

These C-Face brakes use splined hubs and internally splined friction discs as standard equipment. The spline design virtually elimi nates back lash which is a delayed action effect caused by excessive clearances between hub and discs.

Splines in crease disc life because the many con tact points between hub and discs reduce the concentration of stresses encountered with non-splined hubs having only a few contact points.

Q

ORDER BY CATALOG NUMBER OR ITEM CODE

Torque (Lb. Ft.)	NEMA Frame	Bore Code	Mounting	Coil Voltage					
				115/230 VAC, 60 Hz		208-230/460 VAC, 60 Hz 190/380 VAC, 50 Hz		575 VAC, 60 Hz	
				Catalog Number	Item Code	Catalog Number	Item Code	Catalog Number	Item Code
3	56C	B5	Horizontal/Vertical	**CMBA56R-3**	67545	**CMBA56U-3**	67546	**CMBA56Y-3**	67547
6		B5	Horizontal	**CMBA56R-6**	67548	**CMBA56U-6**	67549	**CMBA56Y-6**	67550
	140TC	B7	Horizontal	**CMBA140TR-6**	67551	**CMBA140TU-6**	67552	**CMBA140TY-6**	67553
		B7	Vertical Shaft Up	**CMBA140TR-6U**	67554	**CMBA140TU-6U**	67556	—	—
		B7	Vertical Shaft Down	**CMBA140TR-6D**	67555	**CMBA140TU-6D**	67557	—	—

ALL DIMENSIONS IN INCHES

Size	AC	C	G	X	U	Housing O.D.	Approx. Weight
56-3 56-6 140T-6	9/16	4-15/16	1-3/16	7/8	**5/8 5/8 7/8**	6-7/8	12 Lbs.

PARTS (ORDER BY ITEM CODE)

Description	Item Code
Base Kit	67561
Coil–115/230 VAC 60 Hz	67558
Coil–208-200-380-440 VAC	67559
Coil–575 VAC 60 Hz	67560
Disc–Stationary	67562
Disc–Rotating	67563

Dimensions

** Included In Parts Package

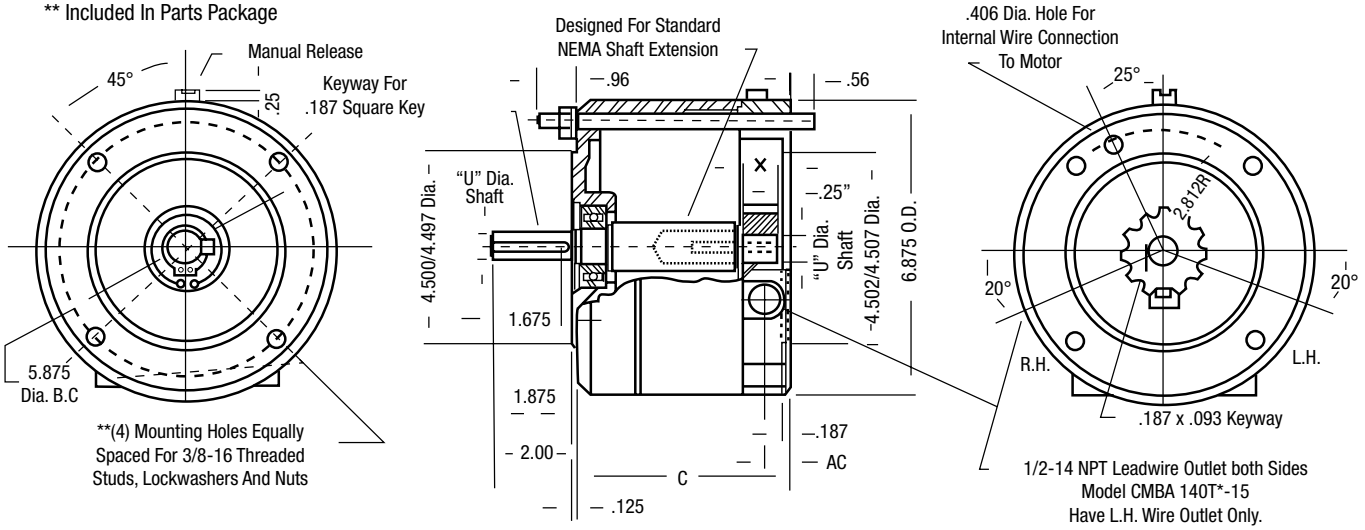

Notes

Q





R

Section Contents

Speed Reducer Nomenclature 352

Horsepower and Torque 353

AGMA Service Factors & Load Classifications 354-355

Application Considerations 356-358

Application Formulas 359

Speed Reducer Nomenclature

AXIAL MOVEMENT – Endwise movement of input or output shafts, sometimes called endplay, is usually expressed in thousands of an inch.

EFFICIENCY – The amount of output power of the reducer as compared to the amount of input power. It is usually stated as a percentage.

Example:

Input HP = 1

Output HP = .75

(75/100) x (100) = 75% Efficiency

BACKLASH – Rotational movement of the output shaft when holding the input shaft stationary and rotating the output shaft alternately clockwise and counter clockwise. Backlash may be expressed in thousands of an inch measured at a specific radius at the output shaft.

CENTER DISTANCE – On a single reduction reducer, this is the distance between the center lines of the input and output shafts. Shaft center lines may be parallel or at right angles to one another. The center distance of multiple stage reducers usually refers to the lowest speed stage (last reduction).

THRUST LOAD – Forces imposed on a shaft parallel to the shaft axis. Such a force is called a thrust load. It is often encountered on shafts driving mixers, fans, blowers and similar machines. When a thrust load acts on a speed reducer, you must be sure that the thrust load rating of the reducer is high enough that it's shafts and bearings can absorb the load.

MECHANICAL RATING – The maximum power or torque that a speed reducer can transmit, based on the strength and durability of its components, is it's mechanical rating. Obviously, the reducer may be rated no higher than the strength or durability of its weakest component. Reducers typically have a safety margin of two to three on their mechanical ratings. Thus, a reducer can withstand momentary overloads of 200-300% of its mechanical rating during a startup or other brief overload situations.

THERMAL RATING – The maximum power or torque that a speed reducer can transmit continuously, based on its ability to dissipate heat generated by friction, is called its thermal rating.

PRIME MOVER – The machine that provides power to a drive is its prime mover. The most frequently encountered prime movers include electric motors, internal combustion engines, hydraulic motors and air motors. The type of prime mover used can affect the speed reducer during operation. For example, an electric motor runs relatively smoothly in comparison to an internal combustion engine.

MOUNTING POSITION – The relationship of the input and output shafts relative to the floor line.

INPUT HORSEPOWER – The amount of power applied to the input shaft of a reducer by the prime mover is its input horsepower. It is often used as a selection basis for power transmission components, and it appears in the rating tables of drive manufacturer's published data. Remember that input horsepower ratings represent the maximum amount of power that the reducer can safely handle.

OUTPUT HORSEPOWER – The amount of power available at the output shaft of a reducer is its output horsepower. Due to losses caused by inefficiency, output horsepower is always less than input horsepower.

OVERHUNG LOAD – The input or the output shaft of a speed reducer can be subject to an overhung load; that is, to a force applied at right angles to the shaft, beyond its outermost bearing. Such a force is a shaft bending load resulting from a gear, pulley, sprocket or other external drive member. Besides the tendency to bend the shaft, the overhung load (that is, the radial force on the shaft) is reacted to by the shaft in it's bearings. Therefore, the overhung load creates loads that the bearings must be able to support without damage.

SERVICE FACTORS – Numbers which modify the loads which must be considered in selecting a speed reducer are called service factors. They vary with the type of service in which the reducer is to be used, the kind of prime mover involved and the duty cycle. The service factor can be a multiplier applied to the known load, which redefines the load in accordance with the conditions at which the drive will be used, or it can be a divisor applied to catalog reducer ratings, thus redefining the rating in accordance with drive conditions. The service factor is usually applied to the speed reducer, but can also be applied to the name plate rating of the prime mover.

REDUCTOR® – Boston Gear's registered trademark for a speed reducer having a projecting input shaft suitable for mounting a coupling, sprocket, pulley or gear.

FLANGED REDUCTOR – Boston Gear's name for a reductor furnished with an input flange suitable for attaching a face mounted motor.

RATIOMOTOR®– Boston Gear's registered trademark for a motorized reducer consisting of a flanged reductor and face mounted motor assembled, sometimes referred to as a gearmotor.

SELF-LOCKING ABILITY – Boston 700 Series reducers, under no conditions should be considered to hold a load when at rest.

BACK-DRIVING – This is the converse of self-locking. Depending upon ratio and many variables, it is difficult to predict the back-driving capability of a 700 Series reducer. Worm gear reducers are not intended to be used as speed increasers. Consult factory for back-driving applications.

POWER is the rate of doing work.

WORK is the exerting of a FORCE through a DISTANCE. ONE FOOT POUND is a unit of WORK. It is the WORK done in exerting a FORCE OF ONE POUND through a DISTANCE of ONE FOOT.

THE AMOUNT OF WORK done (Foot Pounds) is the FORCE (Pounds) exerted multiplied by the DISTANCE (Feet) through which the FORCE acts.

THE AMOUNT OF POWER used (Foot Pounds per Minute) is the WORK (Foot Pounds) done divided by the TIME (Minutes) required.

$$\text{POWER (Foot Pounds per Minute)} = \frac{\text{WORK (Ft. Lbs.)}}{\text{TIME (Minutes)}}$$

POWER is usually expressed in terms of HORSEPOWER.

HORSEPOWER is POWER (Foot Pounds per Minute) divided by 33,000.

HORSEPOWER (HP)

$$= \frac{\text{POWER (Ft. Lbs. per Minute)}}{33{,}000}$$

$$= \frac{\text{WORK (Ft. Pounds)}}{33{,}000 \times \text{TIME (Min.)}}$$

$$= \frac{\text{FORCE (Lbs.)} \times \text{DISTANCE (Feet)}}{33{,}000 \times \text{TIME (Min.)}}$$

Illustration of horsepower

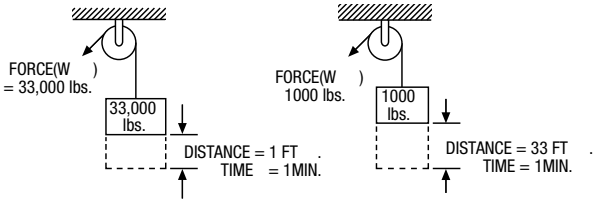

$$HP = \frac{33{,}000 \times 1}{33{,}000 \times 1} = 1 \text{ HP} \qquad HP = \frac{1000 \times 33}{33{,}000 \times 1} = 1 \text{ HP}$$

TORQUE (T) is the product of a FORCE (W) in pounds, times a RADIUS (R) in inches from the center of shaft (Lever Arm) and is expressed in Inch Pounds.

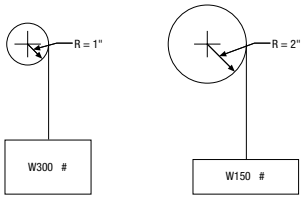

T = WR
= 300 x 1 = 300 In. Lbs.

T = WR
= 150 x 2 = 300 In. Lbs.

If the shaft is revolved, the FORCE (W) is moved through a distance, and WORK is done.

$$\text{WORK (Ft. Lbs.)} = W \times \frac{2\pi R}{12} \times \text{No. of Rev. of shaft}$$

When WORK is done in a specified TIME, POWER is used.

$$\text{POWER (Ft. Pounds per Minute)} = W \times \frac{2\pi R}{12} \times \text{RPM}$$

Since (1) HORSEPOWER = 33,000 Ft. Pounds per Minute

$$\text{Horsepower (HP)} = W \times \frac{2\pi R}{12} \times \frac{\text{RPM}}{33{,}000} = \frac{W \times R \times \text{RPM}}{63{,}025}$$

but TORQUE (Inch Pounds) = FORCE (W) x RADIUS (R)

$$\text{Therefore HORSEPOWER (HP)} = \frac{\text{TORQUE (T)} \times \text{RPM}}{63{,}025}$$

Where total reductions are small, 50 to 1 or less, HP figures are commonly used. Higher reductions require that TORQUE figures be used to select drive components, because with large reductions, a small motor can produce extremely high TORQUE at the final low speed. For example, 1/12 HP reduced to 1 RPM using the formula below and neglecting friction:

$$HP = \frac{\text{TORQUE} \times \text{RPM}}{63{,}025} \text{ or } \text{TORQUE} = \frac{63{,}025 \times HP}{\text{RPM}}$$

$$\text{TORQUE} = \frac{63{,}025 \times 1/12}{1} = 5{,}252 \text{ In. Lbs.}$$

Therefore, motors for use with large reductions should be carefully selected. Even a small motor, if stalled, can produce enough Torque to ruin the drive, unless it is protected by a shear pin or some similar device.

Neglecting frictional losses, this sketch illustrates the manner in which Torque increases as speed decreases.

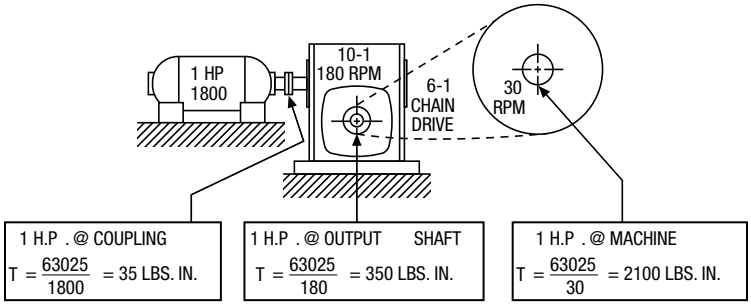

R

AGMA Service Factors and Load Classifications

Type of Machine To Be Driven	Non-Motor Reducer (Service Factors) Hours Per Day 3 to 10	Non-Motor Reducer (Service Factors) Hours Per Day Over 10	Motorized Reducer (Class of Service) Hours Per Day 3 to 10	Motorized Reducer (Class of Service) Hours Per Day Over 10
AGITATORS				
Pure Liquid	1.00	1.25	I	II
Semi-Liquids, Variable Density	1.25	1.50	II	II
BLOWERS				
Centrifugal and Vane	1.00	1.25	—	—
Lobe	1.25	1.50	—	—
BREWING AND DISTILLING				
Bottling Machinery	1.00	1.25	I	II
Brew Kettles - Continuous Duty	—	1.25	—	II
Cookers - Continuous Duty	—	1.25	—	II
Mash Tubs - Continuous Duty	—	1.25	—	II
Scale Hopper - Frequent Starts	1.25	1.50	II	II
CAN FILLING MACHINES				
Can Knives	1.50	—	—	—
Car Dumpers	1.75	—	III	—
Car Pullers	1.25	—	*	—
Clarifiers	1.00	1.25	I	II
Classifiers	1.25	1.50	II	II
CLAY WORKING MACHINERY				
Brick Press & Briquette Machine	1.75	2.00	III	III
Extruders and Mixers	1.25	1.50	II	III
COMPRESSORS				
Centrifugal	1.00	1.25	—	—
Lobe - Reciprocating, Multi-Cycle	1.25	1.50	—	—
Reciprocating - Single Cycle	1.75	2.00	—	—
CONVEYORS - UNIFORMLY LOADED & FED				
Apron	1.00	1.25	II	III
Assembly Belt - Bucket or Pan	1.00	1.25	II	II
Chain - Flight	1.00	1.25	II	II
Oven - Live Roll - Screw	1.00	1.25	I	II
CONVEYORS - HEAVY DUTY NOT UNIFORMLY FED				
Apron	1.25	1.50	II	III
Assembly Belt - Bucket or Pan	1.25	1.50	II	II
Chain - Flight	1.25	1.50	II	II
Live Roll	—	—	*	*
Oven - Screw	1.25	1.50	I	II
Reciprocating - Shaker	1.75	2.00	III	III
CRANES AND HOISTS				
Main Hoists	1.00	1.25	I	II
Bridge and Trolley Drive	*	*	II	II
CRUSHER				
Ore, Stone	1.75	2.00	—	—
Sugar	1.50	1.50	—	—
ELEVATORS				
Bucket - Uniform Load	1.00	1.25	I	II
Bucket - Heavy Load	1.25	1.50	II	III
Centrifugal Discharge	1.25	1.50	I	II
Freight	1.25	1.50	II	II
Gravity Discharge	1.00	1.25	I	II
FANS				
Centrifugal - Light (Small Dia.)	1.00	1.25	—	—
Large Industrial	1.25	1.50	—	—

*Consult Manufacturer.

Type of Machine To Be Driven	Non-Motor Reducer (Service Factors) Hours Per Day 3 to 10	Non-Motor Reducer (Service Factors) Hours Per Day Over 10	Motorized Reducer (Class of Service) Hours Per Day 3 to 10	Motorized Reducer (Class of Service) Hours Per Day Over 10
FEEDERS				
Apron - Belt - Screw	1.25	1.50	—	—
Disc	1.00	1.25	—	—
Reciprocating	1.75	2.00	—	—
FOOD INDUSTRY				
Beet Slicer	1.25	1.50	II	II
Bottling, Can Filling Machines	1.00	1.25	—	—
Cereal Cooker	1.00	1.25	I	II
Dough Mixer - Meat Grinder	1.25	1.50	II	II
Generators (Not Welding)	1.00	1.25	—	—
Hammer Mills	1.75	2.00	—	—
Slicers	1.00	1.25	—	—
HOISTS				
Heavy Duty	1.75	2.00	—	—
Medium Duty and Skip Type	1.25	1.50	—	—
Laundry Tumblers	1.25	1.50	II	III
LINE SHAFTS				
Uniform Load	1.00	1.25	I	II
Heavy Load	1.25	1.50	II	II
MACHINE TOOLS				
Auxiliary Drive	1.00	1.25	I	II
Main Drive - Uniform Load	1.25	1.50	II	II
Main Drive - Heavy Duty	1.75	2.00	III	III
METAL MILLS				
Draw Bench Carriers & Main Drive	1.25	1.50	—	—
Slitters	1.25	1.50	—	—
TABLE CONVEYORS - NON REVERSING				
Group Drives	1.25	1.50	II	III
Individual Drives	1.75	2.00	III	III
Wire Drawing, Flattening or Winding	1.25	1.50	II	III
MILLS ROTARY TYPE BALL & ROD				
Spur Ring Gear and Direct Connected	—	2.00	—	—
Cement Kilns, Pebble	—	1.50	—	—
Dryers and Coolers	—	1.50	—	—
Plain and Wedge Bar	—	1.50	—	—
Tumbling Barrels	—	2.00	—	—
MIXERS				
Concrete - Continuous	1.25	1.50	II	III
Concrete - Intermittent	1.25	1.50	II	—
Constant Density	1.00	1.25	I	II
Semi-Liquid	1.25	1.50	II	II
OIL INDUSTRY				
Oil Well Pumping	—	*	—	—
Chillers, Paraffin Filter	1.25	1.50	—	—
Press Rotary Kilns	1.25	1.50	—	—
PAPER MILLS				
Agitator (Mixer)	1.25	1.50	II	II
Agitator - Pure Liquids	1.00	1.25	—	—
Barking Drums - Mechanical Barkers	1.75	2.00	—	—
Bleacher	1.00	1.25	I	II
Beater	1.25	1.50	—	—
Calendar - Heavy Duty	—	2.00	—	—

AGMA Service Factors and Load Classifications

Type of Machine To Be Driven	Non-Motor Reducer (Service Factors) Hours Per Day 3 to 10	Non-Motor Reducer (Service Factors) Hours Per Day Over 10	Motorized Reducer (Class of Service) Hours Per Day 3 to 10	Motorized Reducer (Class of Service) Hours Per Day Over 10
PAPER MILLS (Continued)				
Calendar - Anti-Friction Bearings	1.00	1.25	—	II
Cylinders	1.25	1.50	—	II
Chipper	—	2.00	—	III
Chip Feeder	1.25	1.50	—	—
Coating Rolls - Couch Rolls	1.00	1.25	—	—
Conveyors - Chips - Bark - Chemical	1.00	1.25	—	—
Conveyors - Log and Slab	—	2.00	—	—
Cutter	—	2.00	—	—
Cylinder Molds, Dryers - Anti-Friction	—	1.25	—	—
Felt Stretcher	1.25	1.50	—	II
Screens - Chip and Rotary	1.25	1.50	—	—
Thickener (AC)	1.25	1.50	—	—
Washer (AC)	1.25	1.50	—	—
Winder - Surface Type	—	1.25	—	II
PLASTICS INDUSTRY				
Intensive Internal Mixers				
Batch Type	—	1.75	—	—
Continuous Type	—	1.50	—	—
Batch Drop Mill - 2 Rolls	—	1.25	—	—
Compounding Mills	—	1.25	—	—
Calendars	—	1.50	—	—
Extruder - Variable Speed	—	1.50	—	—
Extruder - Fixed Speed	—	1.75	—	—
PULLERS				
Barge Haul	—	2.00	—	—
PUMPS				
Centrifugal	—	1.25	—	—
Proportioning	—	1.50	*	*
Reciprocating				
Single Acting, 3 or More Cycles	1.25	1.50	II	III
Double Acting, 2 or More Cycles	1.25	1.50	II	III
Rotary - Gear or Lube	1.00	1.25	I	II
RUBBER INDUSTRY				
Batch Mixers	—	1.75	—	—
Continuous Mixers	—	1.50	—	—

Type of Machine To Be Driven	Non-Motor Reducer (Service Factors) Hours Per Day 3 to 10	Non-Motor Reducer (Service Factors) Hours Per Day Over 10	Motorized Reducer (Class of Service) Hours Per Day 3 to 10	Motorized Reducer (Class of Service) Hours Per Day Over 10
RUBBER INDUSTRY (Continued)				
Continuous Mixers	—	1.50	—	—
Calendars	—	1.50	—	—
Extruders - Continuous	—	1.50	—	—
Extruders - Intermittent	—	1.75	—	—
Tire Building Machines	—	—	II	II
Tire and Tube Press Operators	—	—	I	I
SEWAGE DISPOSAL EQUIPMENT				
Bar Screens	1.00	1.25	I	II
Chemical Feeders	1.00	1.25	I	II
Collectors	1.00	1.25	I	II
Dewatering Screws	1.25	1.50	II	II
Scum Breakers	1.25	1.50	II	II
Slow or Rapid Mixers	1.25	1.50	II	II
Thickeners	1.25	1.50	II	II
Vacuum Filters	1.25	1.50	II	II
SCREENS				
Air Washing	1.00	1.25	I	II
Rotary - Stone or Gravel	1.25	1.50	II	II
Traveling Water Intake	1.00	1.25	I	II
Skip Hoists	—	—	II	—
Slab Pushers	1.25	1.50	—	—
Stokers	—	1.25	—	II
TEXTILE INDUSTRY				
Batchers or Calendars	1.25	1.50	II	II
Cards	1.25	1.50	I	II
Card Machines	1.75	2.00	III	III
Dry Cans and Dryers	1.25	1.50	II	II
Dyeing Machines	1.25	1.50	II	II
Looms	1.25	1.50	*	*
Mangles, Nappers and Pads	1.25	1.50	II	II
Soapers, Tenner Frames	1.25	1.50	II	II
Spinners, Washers, Winders	1.25	1.50	II	II
Tumbling Barrels	1.75	2.00	III	III
Windlass	1.25	1.50	II	III

*Consult Manufacturer.

This list is not all-inclusive and each application should be checked to determine if any unusual operating conditions will be encountered.

SERVICE FACTOR CHART

AGMA Class of Service	Service Factor	Operating Conditions
I	1.00	Moderate Shock - not more than 15 minutes in 2 hours. Uniform Load - not more than 10 hours per day.
II	1.25	Moderate Shock - not more than 10 hours per day. Uniform Load - more than 10 hours per day.
	1.50	Heavy Shock - not more than 15 minutes in 2 hours. Moderate Shock - more than 10 hours per day.
III	1.75 2.00	Heavy Shock - not more than 10 hours per day. Heavy Shock - more than 10 hours per day.

R

Application Considerations

For most applications, select for running torque rather than starting torque. The AC motor will normally produce a 200 percent starting torque. The speed reducer is built to take at least 200% momentary overload to overcome normal starting inertia. The difference in the resulting cost can be startling.

A 20% safety factor in selection can double the life … of the speed reducer for more economy in the long run. This rule of thumb will help compensate for unexpected shock and vibration, and add substantially to wear life.

Consider "auxiliary drives" whenever possible for economy. A properly selected gear or chain drive reduction from the reducer output to the driven shaft can produce substantial savings in space and drive cost.

Avoid auxiliary drives to the input shaft … unless absolutely necessary. Auxiliary reduction from the motor to the input shaft can increase the size and cost of the drive.

Hoists

Worm gear reducers are ideal for many hoist applications. There are, however, certain precautions which should be exercised with what are thought to be self-locking characteristics of this reducer type.

A worm gear is generally said to be self-locking or irreversible when the gear cannot drive the worm – when the lead angle of the worm is less than the friction angle and hence, reverse drive efficiency is zero. This static condition can be upset by vibrations from nearby machinery or other sources. Many worm gear reducers are not self-locking, and even a particular size and ratio, which may appear to be, cannot be depended upon for this purpose. Also, a reducer which holds the load when upward movement is stopped may not when the load inertia is moving downward and the motor is stopped. For complete locking assurance, it is recommended that a fail-safe brake be used for such an application.

Finding the required torque and drum RPM…

Torque (Lb. Ins.) = (Load) x (Drum Radius)

RPM = (Velocity) ÷ .2618 x (Drum Dia.)

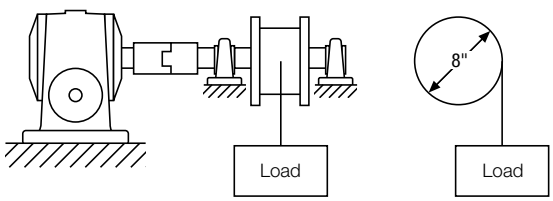

Belt Conveyors

Belt conveyor applications are one of those wherein the speed reducer is commonly overspecified. Proper application can, in many instances, result in substantial system economies.

To determine the torque required here, first determine the belt pull, since this is the principal force. In calculating this, the effects of sliding friction and/or angle or inclination must be considered. Table 1 shows Application Factors which may be used in determining belt pull based upon common combinations of materials and various angles.

TABLE 1. CONVEYOR APPLICATION FACTORS

Material Combinations	Angle From The Horizontal									
	0°	10°	20°	30°	40°	50°	60°	70°	80°	90°
Pivoting bucket conveyor	.025	.19	.36	.52	.66	.78	.88	.95	.99	1.00
Belt on rollers	.025	.19	.36	.52	.66	.78	.88	.95	.99	1.00
Metal on metal (finished)	.20	.37	.53	.67	.80	.89	.97	1.01	1.02	1.00
Fabric on steel	.27	.44	.60	.74	.85	.94	1.00	1.03	1.03	1.00
Fabric on wood	.32	.49	.63	.77	.88	.97	1.02	1.04	1.04	1.00
Leather on wood	.35	.52	.67	.80	.91	.99	1.04	1.06	1.05	1.00
Wood on wood	.35	.52	.67	.80	.91	.99	1.04	1.06	1.05	1.00
Plastic on steel	.35	.52	.67	.80	.91	.99	1.04	1.06	1.05	1.00
Metal on wood	.40	.57	.72	.85	.95	1.02	1.07	1.08	1.05	1.00
Rubber on wood	.45	.62	.76	.89	.99	1.05	1.09	1.09	1.06	1.00
Rubber on steel	.50	.67	.81	.93	1.03	1.09	1.12	1.11	1.07	1.00
Leather on metal	.56	.72	.87	.98	1.06	1.12	1.14	1.13	1.08	1.00

Interpolation in the table above is permissible.

The procedure involves selection of the proper Application Factor for the calculations:

Belt Pull =
(Total weight on conveyor) x (Application Factor)

Torque = (Belt Pull) x (Radius of Head Pulley)

Example:

An inclined belt conveyor is to carry cases of canned fruit. The belt is leather on a wood conveyor bed. Ten cases will be on the conveyor at a time, and each weighs 30 Lbs. The conveyor is inclined at 20° to the horizontal, and the head pulley diameter is 9".

How much torque is required at the head pulley?

Select .67 as the Application Factor (Table 1)

Determine weight: 10 x 30 = 300 Lbs.

Determine belt pull: 300 x .67 = 201 Lbs.

Determine Torque: 201 x 9/2 = 201 x 4.5
= 904 Lb. Ins.

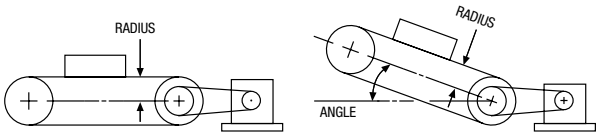

Cylinders

These applications deal principally with rotation of weight about a horizontal centerline. Again, they are commonly subject to reducer overspecification. The table of Rolling Friction Factors in the section on turntables may be used, since the supporting members will be essentially the same.

Figure 1

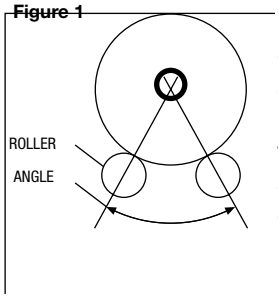

For **Roller Supported** cylinders (Figure 1), the torque required will depend on the rolling friction factor and the angle between the rollers, in addition to the weight. Assuming that the load in the cylinder is non-solid and tends to remain essentially central (or balanced). The Table below lists angle factors to be used in the calculations.

Table 2. Angle Factors For Roller Supported Cylinders

Angle	0°	20°	40°	50°	60°	70°	80°	90°
Angle Factor	1.00	1.02	1.06	1.10	1.15	1.22	1.31	1.41

The friction force acts at the point of contact between the rollers and the cylinder, and will be:

Friction Force=(Weight)x(Friction Factor)x(Angle Factor)

Assuming the cylinder is to be driven by one of the rollers:

Torque = (Friction Force) x (Radius of Roller)

Example:

A 1200 Lb. steel cylinder is resting on two pairs of steel rollers which are 4" in diameter. The cylinder is empty. The angle between rollers is 50°. How much torque is required at the roller to turn the cylinder?

Select 1.10 as Angle Factor (Table 2), and .025 as Rolling Friction Factor (Table 3).

Determine Friction Force: 1200 x .025 x 1.10 = 33 Lbs.

Determine Torque: 33 x 2 = 66 Lb. Ins.

Figure 2

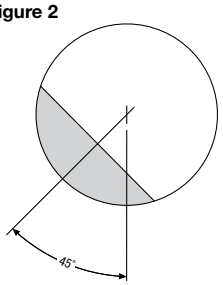

Horizontal Axis Supported cylinders (Figure 2), with unbalanced loads require a different approach. Assuming that the cylinder is not full, and that the material is rotated to a position about 45° from the vertical, the torque is equal to the Material Weight x "Effective Radius".

Effective Radius = Cylinder Diameter (D) x 0.23 (1/4 full)
0.15 (1/2 full)
0.08 (3/4 full)

Example:

An axis supported cylinder is 3 Ft. in diameter and is half full of semi-solids mixture weighing 400 Lbs. How much torque is required (at the axis) to rotate the cylinder?

Determine the Effective Radius: .15 x (3 x 12) = 5.4 In.

Calculate Torque: 400 x 5.4 = 2160 Lb. Ins.

R

Turntables

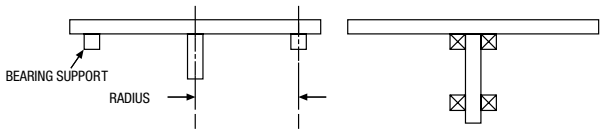

Here, too, turntable applications appear to lend themselves to overspecification of the speed reducer.

This type of problem involves rotation of weight in a horizontal plane, and in most cases the torque must only overcome the friction between the turntable and its supporting bearings. Assuming that the speed of rotation will be slow, the bearing loads caused by centrifugal forces (resulting from eccentric loading) may be ignored. Since in most applications, the turntable is supported by anti-friction bearings or rollers, a Table of Rolling Friction Factors is provided to be used in the following calculations.

Table 3. Rolling friction factors

Radial Ball Bearings	.001
Roller Bearings	.0015
Thrust Ball Bearings	.0034
Steel Wheels on Steel	.025
Iron Rollers on Wood	.13
Iron Rollers on Asphalt	.14

In rim supported turntables, a friction factor should be selected on the basis of the type of supporting bearings. The load on the bearings will be the sum of the weight of the turntable itself plus the load; the friction force at the bearings is the product of the total weight and the friction factor.

Force = (Total Weight x Friction Factor)

Torque = (Force) x (Radius)

Example:

A turntable 20 feet in diameter is to rotate a 4500 Lb. automobile. A ring of steel casters (riding on steel) supports the turntable, the casters are located at a radius of 8 feet. The turntable weights 1500 Lbs. How much torque is required to drive the turntable at the axis?

Select .025 as Rolling Friction Factor (Table 3).

Determine weight: 4500 + 1500 = 6000 Lbs.

Determine Friction Force: 6000 x .025 = 150 Lbs.

Determine Torque: 150 x (8 x 12) = 14,400 Lb. Ins.

Center supported turntables do not lend themselves well to calculation because the bearings are on the supporting shaft. The scale measurement of the torque will provide the most accurate value. If this is not possible, the mean radius of the bearing may be used in the above formulas with some degree of accuracy.

Application Formulas

TO OBTAIN	HAVING	FORMULA
Velocity (V) Feet Per Minute	Pitch Diameter (D) of Gear or Sprocket - Inches and Revolutions Per Minute (RPM)	$V = .2618 \times D \times RPM$
Revolutions Per Minute (RPM)	Velocity (V) Feet Per Minute and Pitch Diameter (D) of Gear or Sprocket - Inches	$RPM = \frac{V}{.2618 \times D}$
Pitch Diameter (D) of Gear or Sprocket	Velocity (V) Feet Per Minute and Revolutions Per Minute (RPM)	$D = \frac{V}{.2618 \times RPM}$
Torque (T) In. Lbs.	Force (W) Lbs. and Radius (R) Inches	$T = W \times R$
Horsepower (HP)	Force (W) Lbs. and Velocity (V) Feet Per Minute	$HP = \frac{W \times V}{33000}$
Horsepower (HP)	Torque (T) In. Lbs. and Revolutions Per Minute (RPM)	$HP = \frac{T \times RPM}{63025}$
Torque (T)	Horsepower (HP) and Revolutions Per Minute (RPM)	$T = \frac{63025 \times HP}{RPM}$
Force (W) Lbs.	Horsepower (HP) and Velocity (V) Feet Per Minute	$W = \frac{33000 \times HP}{V}$
Revolutions Per Minute (RPM)	Horsepower (HP) and Torque (T) In. Lbs.	$RPM = \frac{63025 \times HP}{T}$

R

Terms and Conditions

All Quotations And Sales By Boston Gear, The Contracting Party Hereto, A Division Of Altra Industrial Motion. Hereafter Called "Company" Are Made On The Following Terms And Conditions.

1. Quotations and Their Acceptance

Unless otherwise specified, quotations on stock products are for immediate acceptance, subject to prior sales. Quotations on special products are made subject to acceptance within sixty (60) days from date thereof, but in making such quotations, the Company reserves the right to change or cancel them at any time prior to the receipt of the customers' written acceptance. All quotations for special products are based upon supplying up to plus or minus 5% of quantity ordered unless otherwise stated in the quotation. All quotations are made F.O.B. shipping point.

2. Prices

Prices are in accordance with current Company price lists, are based on quantity specified and are subject to minimum order requirements of the Company. In the event the Company consents to the cancellation or suspension of orders, it shall be entitled to charge for work done and material ordered or used up to the time of giving its written consent to such cancellation or suspension. When work is to be done on material furnished by the customer, prices are based on the quantity specified being delivered by the customer at one time within a reasonable time after acceptance of order. Quotations will be made on special products of all types or on cutting only. Prices, specifications, and terms and conditions, as well as all statements appearing in the Company's catalogs and advertisements, and made elsewhere by the Company are subject to change without notice. Changes by the customer in specifications or delivery requirements will be subject to change in price. Whenever the net price of an order amounts to less than $25.00, a minimum charge of $25.00 will be made.

3. Credit Terms

To those customer and prospective customers whose credit is satisfactory to the Company, terms are net thirty (30) days, from date of invoice, with the option of paying semi-monthly. The Company may at any time when, in its opinion, the financial condition of the customer or prospective customer warrants it, either alter or suspend credit, or discontinue deliveries, and render a charge covering the value of any partially finished special products which are then being manufactured for the customer. In those instances where credit is not established, and in cases where satisfactory references are not given, the terms are cash with order. For special products in those instances where credit is not established to the satisfaction of the Company, a deposit of at least 50% of total value of the order is required. Remittances should be made by check or money order, payable to the Boston Gear, P.O. Box 521 South Beloit, IL 61080, U.S.A. Delays in transportation shall not exceed the terms of payment.

4. Material Furnished by The Customer

Unless otherwise specified, quotations are based on material furnished by the customer being of ordinary hardness, normal allowance for finish, uniform specification, and machine work being of ordinary commercial accuracy. If material furnished by the customer involves the Company in expense not contemplated by the contract, the customer will be charged for all such additional expense. If serious defects are found in the material furnished by the customer, the customer will be charged for the actual work done. The Company assumes no responsibility for, and will not be liable for loss of or damage to samples, blueprints, diagrams, and other material of any nature submitted or furnished by the customer or prospective customer, provided the Company has exercised reasonable care in the handling of the same. The Company does not assume transportation and insurance costs on any of the foregoing items. In all cases where the customer or prospective customer makes no statement in writing, concerning the disposition of any of the foregoing material when submitted, the Company reserves the right to dispose of such material according to its best judgement.

5. Dimensions

When dimensions of rims, bores, and hubs are not clearly specified, quotations are based on ordinary dimensions. Before the customer's blanks are accepted by the Company for cutting, the diameter, holes, rims, and ends of holes must be finished; for bevel gears, hubs, must be of uniform length. There should also be an allowance of extra blanks to cover possible spoilage. Unless otherwise specified, dimensions are in inches.

All Quotations And Sales By Boston Gear, The Contracting Party Hereto, A Division Of Altra Industrial Motion. Hereafter Called "Company" Are Made On The Following Terms And Conditions.

6. Samples

In no case are samples furnished free. If agreed to by the Company, a few products in advance of a regular quantity order will be furnished but only at an agreed upon price over the regular quantity price.

7. Taxes

If any tax is at any time levied or imposed by the federal or any state or local government, or any other taxing authority, upon the products covered hereby, or in respect of the production, processing, manufacture, storage, sale, use, or consumption thereof, or, in the case of goods delivered at the Company's expense, upon the transportation thereof, including freight charges thereon, the amount of such tax shall be added to the purchase price above specified and shall be borne by the customer. The Company will accept a valid exemption certificate from the customer if applicable; however, if any exemption certificate previously accepted is not recognized by the taxing authority involved and the Company is required to pay the tax covered by such exemption certificate, the customer shall be required to promptly reimburse the Company for the taxes so paid.

8. Shipments

All shipments are made F.O.B. shipping point (subject to freight allowance under conditions stated in separate price schedules). When ordering, the customer's desired method of shipment must be clearly stated. Where instructions for shipping do not appear on the order, shipment will be made according to the Company's best judgment. Full risk of loss (including transportation delays and losses) shall pass the customer upon delivery of the products to F.O.B. point. Unless otherwise instructed, all Parcel Post shipments are insured at the customers' expense. Parcel Post shipments without insurance are at the customer's risk. Deliveries by Messenger Service to a terminal are made at the customer's risk and expense. Partial shipments shall be permitted and the Company may invoice each shipment separately.

9. Refusal of Shipment

In case of the refusal or inability of the customer to accept any shipment in accordance with the terms of the order, the customer shall be liable for freight, express, storage, extra cost of handling and all other expenses incurred by the Company as a result of such refusal or inability.

10. Delay or Nonperformance

The Company shall not be liable for any delay or loss of any nature or failure in performance due to or caused by fire, flood, strike, or other differences with workmen, accidents, labor or material or transportation shortages, war (declared or undeclared), insurrection, riot, or by any governmental orders or regulations, legal interferences or prohibitions, defaults on the part of suppliers or other causes beyond the Company's reasonable control.

11. Claims and Rejected Material

Any products which have been altered or damaged are not returnable except with the Company's written consent. To reject products on inspection as defective, customer must notify the Company in writing within ten (10) days from receipt of the products. Before allowing or rejecting claim, the Company shall then have the option of reinspection at the customer's plant or its own. Defects that do not impair service shall not be a cause for rejection. The Company shall have the right to replace within a reasonable time any product or products which in its opinion do not conform to the order. No claim will be allowed for any products damaged by the customer or damaged in transit. Expenses incurred in connection with claims for which the Company is not liable, will be charged to the customer. The Company will not be responsible for any work done to correct errors unless such work is authorized by the written consent of the Company. The Company assumes no liability for any claim for infringement of any foreign or domestic patent.

12. Limited Warranty

The Company warrants that products manufactured or sold by it shall be free from defects in material and workmanship. Any products which shall within two (2) years of delivery, be proved to the Company's satisfaction to have been defective at the time of delivery in these respects will be replaced or repaired by the Company at its option. Freight is the responsibility of the customer. The Company's liability under this limited warranty is limited to such replacement or repair and it shall not be held liable in any form of action for direct or consequential damages to property or person. THE FOREGOING LIMITED WARRANTY IS EXPRESSLY MADE IN LIEU OF ALL OTHER WARRANTIES WHATSOEVER, EXPRESS, IMPLIED AND STATUTORY AND INCLUDING WITHOUT LIMITATION THE IMPLIED WARRANTIES OF MERCHANTABILITY AND FITNESS.

No employee, agent, distributor, or other person is authorized to give additional warranties on behalf of Boston Gear, nor to assume for Boston Gear any other liability in connection with any of its products, except an officer of Boston Gear by a signed writing

Terms and Conditions

All Quotations And Sales By Boston Gear, The Contracting Party Hereto, A Division Of Altra Industrial Motion. Hereafter Called "Company" Are Made On The Following Terms And Conditions.

13. Waiver of Breach

No waiver by the Company of any breach of these provisions shall constitute a waiver of any other breach.

14. Consequential Damages

The Company shall not be liable to the customer or others claiming through the customer for special or consequential charges for any reason whatsoever.

15. Laws

To the best of the Company's knowledge and belief it is in compliance with all local, state and federal laws. All orders are subject to the condition that the Company's obligation under such local, state and federal laws and Executive Orders, Rules and Regulations issued thereunder, whether now in force or hereafter made effective, shall be no greater as a result of this agreement and no greater than required by such laws and the Company expressly disclaims assumptions of any of the customer's obligations under such laws.

16. General

Any terms and conditions of a customer's order which are inconsistent with or additional to the terms and conditions hereof shall not be binding on the Company and shall not be considered applicable to any sale or shipment of the Company's products. All such terms and conditions are hereby expressly rejected. No waiver, alteration or modification of any of the Company's terms and conditions shall be binding on the Company unless made in writing and agreed to by a duly authorized official of the Company.

17. Printers, Stenographic, and Clerical Errors

The Company is not responsible for printers' errors made in any of its publications and other forms of printed matter, or for any stenographic and clerical errors. All such errors are subject to correction.

18. Reducer Express

- Quantities of reducers covered as part of this program are a maximum of:
  6 pieces for any 710-726 or 221-231 and 832-843
  2 pieces for any 730-760 or 239-247 and 852-873
- Bost-Kleen, Stainless Bost-Kleen and modified reducers are not included as part of this program.
- Boston Gear will utilize any major courier to handle air shipments.
- Consult Boston Gear for details.

19. Guaranteed Same Day Shipment

- Products must be available from stock.
- Does not apply to WOG or scheduled release shipments.
- Same day shipment available Monday through Friday excluding U.S. holidays. For emergency service, please call 704-688-7350.
- In the event your freight carrier is unable to meet your requirements, we reserve the right to substitute a carrier of equivalent quality.
- If a shipment is missed and Boston Gear pays the freight, we'll pay for the freight charges as they were originally specified on the order.
- Brokerage and export fees still apply to shipments outside the U.S.
- Video Terminal Orders entered up to 8 p.m. Eastern Time will be shipped the same day.

R

Notes



Notes



R

Boston Gear Online Resources

VISIT US ON THE WEB AT
BOSTONGEAR.COM

Everything Boston Gear

From the Boston Gear homepage you can explore all of our resources and visit our key market portals to find solutions for your specific needs.

WWW.BOSTONGEAR.COM

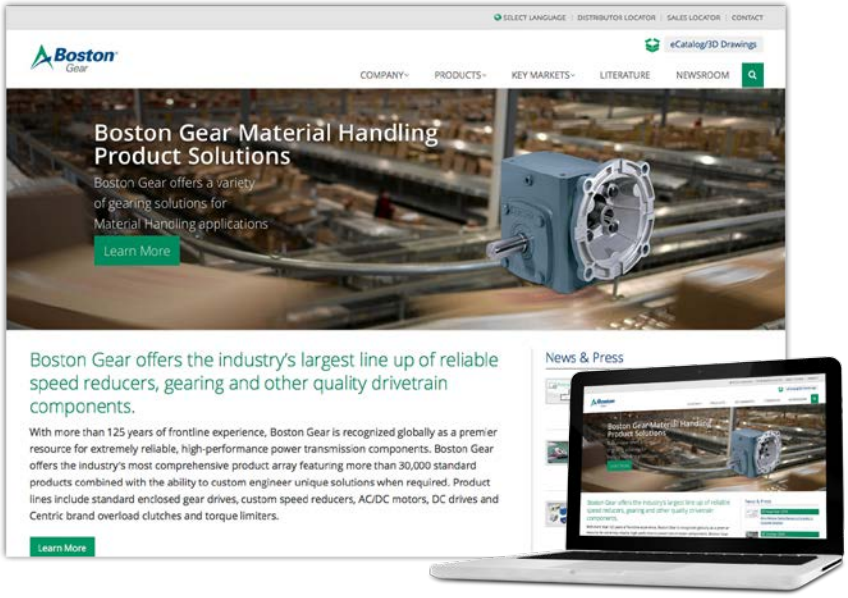

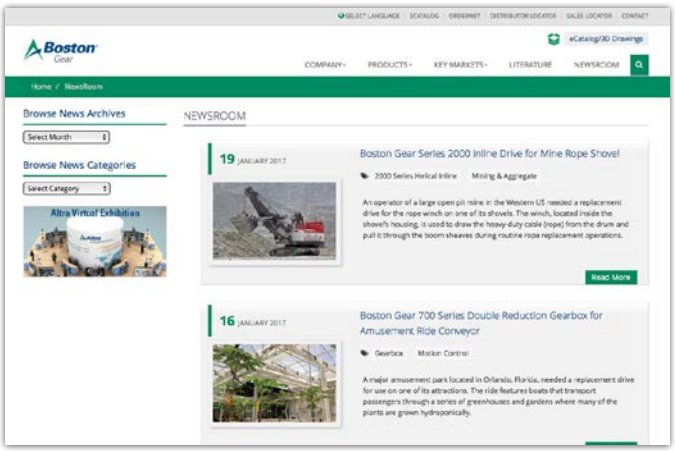

Get Connected

The Boston Gear Newsroom makes it quick and easy for you to get the news you need when you need it. From new literature releases to trade show schedules, the news is at your fingertips 24 hours a day.

WWW.BOSTONGEAR.COM/NEWSROOM

Boston Gear eCatalog

The eCatalog offers product selections and comparisons to meet your specific needs. Download 2D and 3D CAD formats and dimensional line drawings. Submit an online RFQ to the local distributor of your choice.

WWW.BOSTONGEAR.COM/ECATALOG

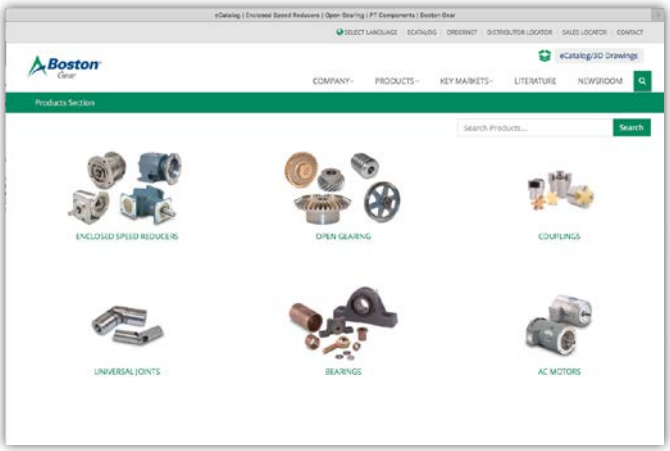

Altra Industrial Motion

All Customer Service phone numbers shown in bold

Belted Drives and Sheaves

TB Wood's

Belted Drives

Chambersburg, PA - USA
1-888-829-6637 – Press #5

For application assistance:
1-888-829-6637 – Press #7

Couplings

Ameridrives Couplings

Mill Spindles, Ameriflex, Ameridisc

Erie, PA - USA
1-814-480-5000

Gear Couplings

San Marcos, TX - USA
1-800-458-0887

Ameridrives Power Transmission

Universal Joints, Drive Shafts, Mill Gear Couplings

Green Bay, WI - USA
1-920-593-2444

Bibby Turboflex

Disc, Gear, Grid Couplings, Overload Clutches

Dewsbury, England
+44 (0) 1924 460801

Boksburg, South Africa
+27(0) 11 918 4270

Guardian Couplings

Engineered Flywheel Couplings, Engine Housings and Pump Mounts, Flexible Shaft Couplings

Michigan City, IN - USA
1-219-874-5248

Huco Dynatork

Precision Couplings and Air Motors

Hertford, England
+44 (0) 1992 501900

Chambersburg, PA - USA
1-888-829-6637

Couplings Cont.

Lamiflex Couplings

Flexible Couplings, Bearing Isolators, and Coupling Guards

Cotia, SP - Brasil
+55 (11) 4615-6300

TB Wood's

Elastomeric Couplings

Chambersburg, PA - USA
1-888-829-6637– Press #5

For application assistance:
1-888-829-6637 – Press #7

General Purpose Disc Couplings

San Marcos, TX - USA
1-888-449-9439

Electromagnetic Clutches and Brakes

Inertia Dynamics

Spring Set Brakes; Power On and Wrap Spring Clutch/Brakes

New Hartford, CT - USA
1-800-800-6445

Matrix International

Electromagnetic Clutches and Brakes, Pressure Operated Clutches and Brakes

Brechin, Scotland
+44 (0) 1356 602000

New Hartford, CT - USA
1-800-825-6544

Warner Electric

Electromagnetic Clutches and Brakes

New Hartford, CT - USA
1-800-825-6544

For application assistance:
1-800-825-9050

Saint Barthélémy d'Anjou, France
+33 (0)2 41 21 24 24

Precision Electric Coils and Electromagnetic Clutches and Brakes

Columbia City, IN - USA
1-260-244-6183

Engineered Bearing Assemblies

Kilian Manufacturing

Engineered Bearing Assemblies

Syracuse, NY - USA
1-315-432-0700

Gearing

Bauer Gear Motor

Geared Motors

Esslingen, Germany
+49 (711) 3518-0

Somerset, NJ - USA
1-732-469-8770

Boston Gear

Enclosed and Open Gearing, Electrical and Mechanical P.T. Components

Charlotte, NC - USA
1-800-825-6544

For application assistance:
1-800-816-5608

Nuttall Gear and Delroyd Worm Gear

Worm Gear and Helical Speed Reducers

Niagara Falls, NY - USA
1-716-298-4100

Heavy Duty Clutches and Brakes

Industrial Clutch

Pneumatic and Oil Immersed Clutches and Brakes

Waukesha, WI - USA
1-262-547-3357

Svendborg Brakes

Industrial Brakes and Brake Systems

Vejstrup, Denmark
+45 63 255 255

Twiflex Limited

Caliper Brakes and Thrusters

Wichita Falls, TX - USA
1-844-723-3483

Twickenham, England
+44 (0) 20 8894 1161

Heavy Duty Clutches and Brakes Cont.

Wichita Clutch

Pneumatic Clutches and Brakes

Wichita Falls, TX - USA
1-800-964-3262

Bedford, England
+44 (0) 1234 350311

Linear Products

Warner Linear

Linear Actuators

Belvidere, IL - USA
1-800-825-6544

For application assistance:
1-800-825-9050

Saint Barthélémy d'Anjou, France
+33 (0)2 41 21 24 24

Overrunning Clutches

Formsprag Clutch

Overrunning Clutches and Holdbacks

Warren, MI - USA
1-800-348-0881– Press #1

For application assistance:
1-800-348-0881 – Press #2

Marland Clutch

Roller Ramp and Sprag Type Overrunning Clutches and Backstops

South Beloit, IL - USA
1-800-216-3515

Stieber Clutch

Overrunning Clutches and Holdbacks

Heidelberg, Germany
+49 (0) 6221-30470

For information concerning our sales offices in Asia Pacific check our website www.altramotion.com.cn

Boston® Gear

www.bostongear.com

701 Carrier Drive
Charlotte, NC 28216-USA
704-588-5610
Fax 704-588-71815

P-1485-BG 2/17 Printed in USA