BALDOR • RELIANCE

Product Information Packet

D1153

.75HP,1750RPM,DC,56,3428D,TEFC,F1

Copyright © All product information within this document is subject to ABB Motors and Mechanical Inc. copyright © protection, unless otherwise noted.

Part Detail

Revision:	U	**Status:**	PRD/A	**Change #:**		**Proprietary:**	No
Type:	DC	**Prod. Type:**	3428D	**Elec. Spec:**	34WG3117	**CD Diagram:**	CD0862B01
Enclosure:	TEFC	**Mfg Plant:**		**Mech. Spec:**	34-6121	**Layout:**	34LY6121
Frame:	56	**Mounting:**	F1	**Poles:**	00	**Created Date:**	
Base:	RG	**Rotation:**	R	**Insulation:**	F	**Eff. Date:**	06-14-2018
Field Type:	Compound/stab Shunt	**Literature:**		**Elec. Diagram:**		**Replaced By:**	

Specs

Enclosure:	TEFC		
Frame:	56		
Frame Material:	Steel		
XP Class and Group:	None		
Agency Approvals:	CSA		
	UR		
Base Indicator:	Rigid		
Bearing Grease Type:	Polyrex EM (-20F +300F)		
Drip Cover:	No Drip Cover		
Duty Rating:	CONT		
Feedback Device:	NO FEEDBACK		
Field Winding Type:	COMPOUND		
Heater Indicator:	No Heater		
Insulation Class:	F		
Lifting Lugs:	No Lifting Lugs		
Motor Lead Quantity/Wire Size:	2 @ 18 AWG		

	2 @ 14 AWG		
Motor Lead Exit:	Ko Box		
Motor Lead Termination:	Flying Leads		
Mounting Arrangement:	F1		
Product Family:	WP Below Decks Marine Duty		
Pulley End Bearing Type:	Sealed Bearing		
RoHS Status:	ROHS COMPLIANT		
Shaft Extension Location:	Pulley End		
Shaft Ground Indicator:	No Shaft Grounding		
Shaft Rotation:	Reversible		
Shaft Slinger Indicator:	Shaft Slinger		
Motor Standards:	NEMA		
XP Division:	Not Applicable		

Nameplate NP2801L

CAT.NO.	D1153		
SPEC.	34-6121-3117		
HP	.75	**ENCL**	TEFC
RPM	1750		
FRAME	56	**TYPE**	3428D
ARM V	115	**ARM A**	6.6
FLD V		**FLD A**	
INSUL	F	**AMB.**	40
DUTY	CONT	**SUPPLY**	A
BRG/DE	6203	**BRG/ODE**	6203
BRUSHES	2/BP5000H03		
	IEEE 45	**BLANK**	
SER.			
BLANK	--		
APRV-CSA		**APRV-UL**	

Parts List

Part Number	Description	Quantity
SA006737	SA 34-6121-3117	1.000 EA
AA003371	AA 34-6121-3117	1.000 EA
BP5000H03SP	BRUSH ASSY, GRADE H619	1.000 EA
11XW1032G06	10-32 X .38, TAPTITE II, HEX WSHR SLTD U	1.000 EA
HW3001B01	BRASS CUP WASHER, FOR #10 SCREW	1.000 EA
34EP3103A06	FR ENDPLATE MACH 34DC F-1 MTG W/.50 N.P.	1.000 EA
WD4100A17	PLUG STIMPSON D4036	1.000 EA
HW5100A03	WAVY WASHER (W1543-017)	1.000 EA
34EP3110A06	PU ENDPLATE, MACH	1.000 EA
HA1005A05SP	SLINGER, OD 1.50, ID .659, 203 BRG	1.000 EA
BP5201A10SP	BRUSH HOLDER ASSY W/BP4509A01 & BP3000A0	1.000 EA
80XN1032A03	10-32 X 3/16 SET SCREW	2.000 EA
34FN3002A01SP	EXTERNAL FAN, PLASTIC, .637/.639 HUB W/	1.000 EA
34FH4002A03SP	IEC FH NO GREASER W/.88 DIA SHAFT HOLE,	1.000 EA
51XW1032A06	10-32 X .38, TAPTITE II, HEX WSHR SLTD S	3.000 EA
WD4100A81	CAPLUG BPF-7/8, FOR .86-.88 HOLE	1.000 EA
34CB4504SP	CONDUIT BOX LID, STAMPED	1.000 EA
34GS1014	GASKET,CONDUIT BOX LID BLACK NEOPRENE	1.000 EA
51XW0832A07	8-32 X .44, TAPTITE II, HEX WSHR SLTD SE	2.000 EA
HW2501D13	KEY, 3/16 SQ X 1.375	1.000 EA
HA7000A04	KEY RETAINER 0.625 DIA SHAFTS	1.000 EA
MG2000A17	RUST INHIBITOR PART # SRPO #20	0.001 GA
MJ5004A05	#242-21 LOCTITE GENERAL PURPOSE MED. STR	0.001 EA
MJ5001A27	32220KN GRAY SEALER *MIN BUY 4 QTS=1GAL	0.001 QT

Parts List (continued)

Part Number	Description	Quantity
WD4102A07	STRAIN RELIEF - MICRO PLASTIC #23MP07W20	1.000 EA
MG1000G27	MED CHARCOAL METALLIC GREY 400-0096	0.014 GA
85XU0407S04	4X1/4 U DRIVE PIN STAINLESS	2.000 EA
HA3100A14	THRUBOLT 10-32 X 7.875	4.000 EA
MN416A01	TAG-INSTAL-MAINT no wire (1200/bx) 5/18	1.000 EA
LB1119N	WARNING LABEL	1.000 EA
27PA1001	PKG GRP, PRINT PK1027A06	1.000 EA
LC0862	DC -- COMPOUND WOUND MOTOR CONNECTION LA	1.000 EA
NP2801L	SS DC UL CSA REV MTG	1.000 EA

DC Motor Performance Data

Record # 235 - Typical performance - not guaranteed values

Winding: 34WG3117-R001	**Type:** 3428D	**Enclosure:** TEFC

Nameplate Data	
Rated Output (HP)	0.75
R.P.M.	1750
Armature Volts	115
Armature Amps	6.6
Field Volts	
Field Amps	
Rating - Duty	40C AMB-CONT
Power Supply Code	K

General Characteristics	
Armature Resistance @ 25ºC	1.299 Ω
Series Winding Resistance @ 25ºC	0.3834 Ω
Shunt Winding Resistance @ 25ºC	194.54 Ω
Armature Inductance	14.5 mH

Load Characteristics at 125 Armature Volts, 125 Field Volts, 0.64 Field Amps

Load Point	1	2	3	4	5	6	7
Armature Amps	0.62	1.98	3.29	4.66	5.99	7.34	8.69
R.P.M.	2144	2098	2026	1960	1894	1842	1782
Torque (LB-FT)	0	0.56	1.13	1.69	2.25	2.81	3.38

Performance Graph at 115.0 Arm V, 0.75HP Typical performance - Not guaranteed values

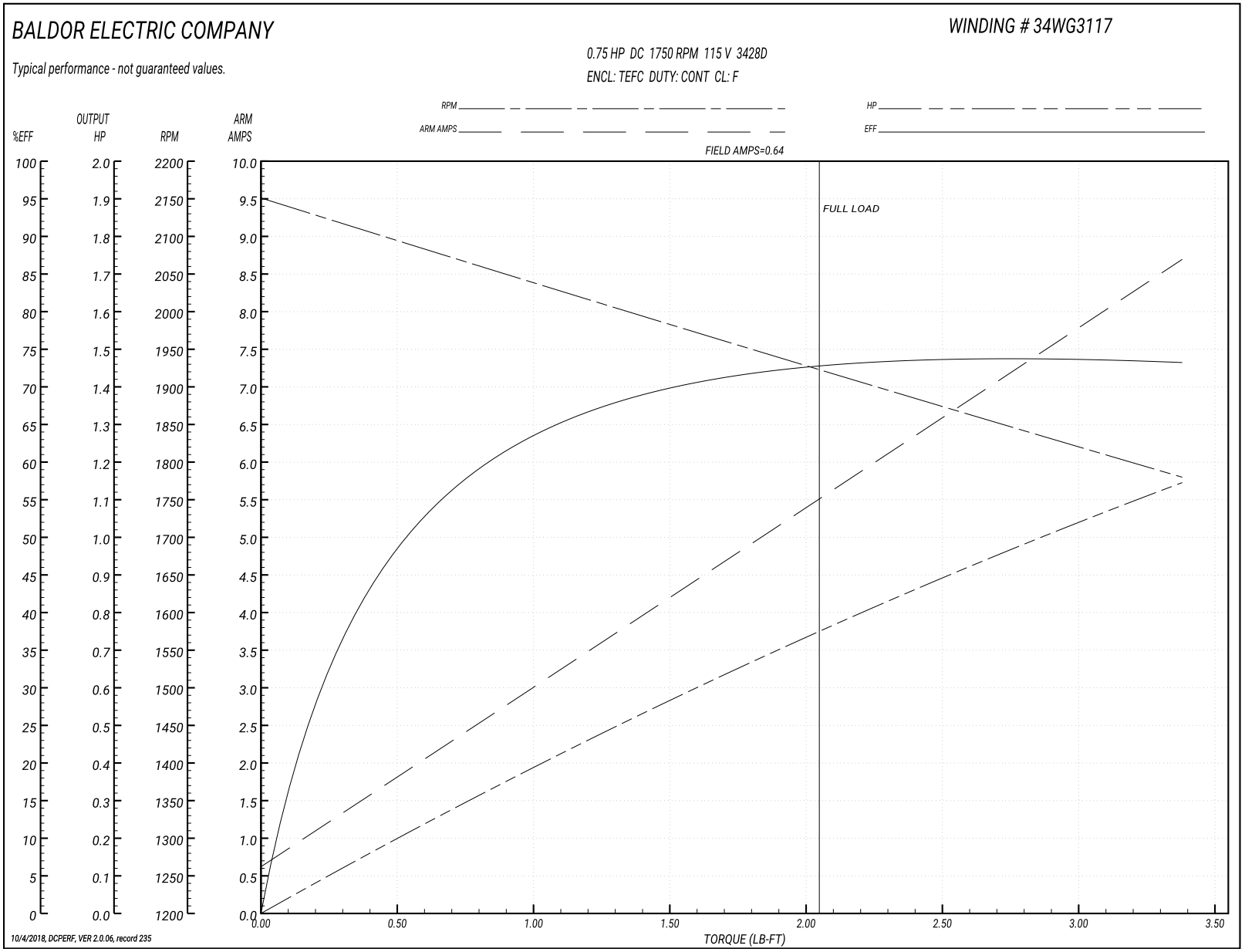

34-6121

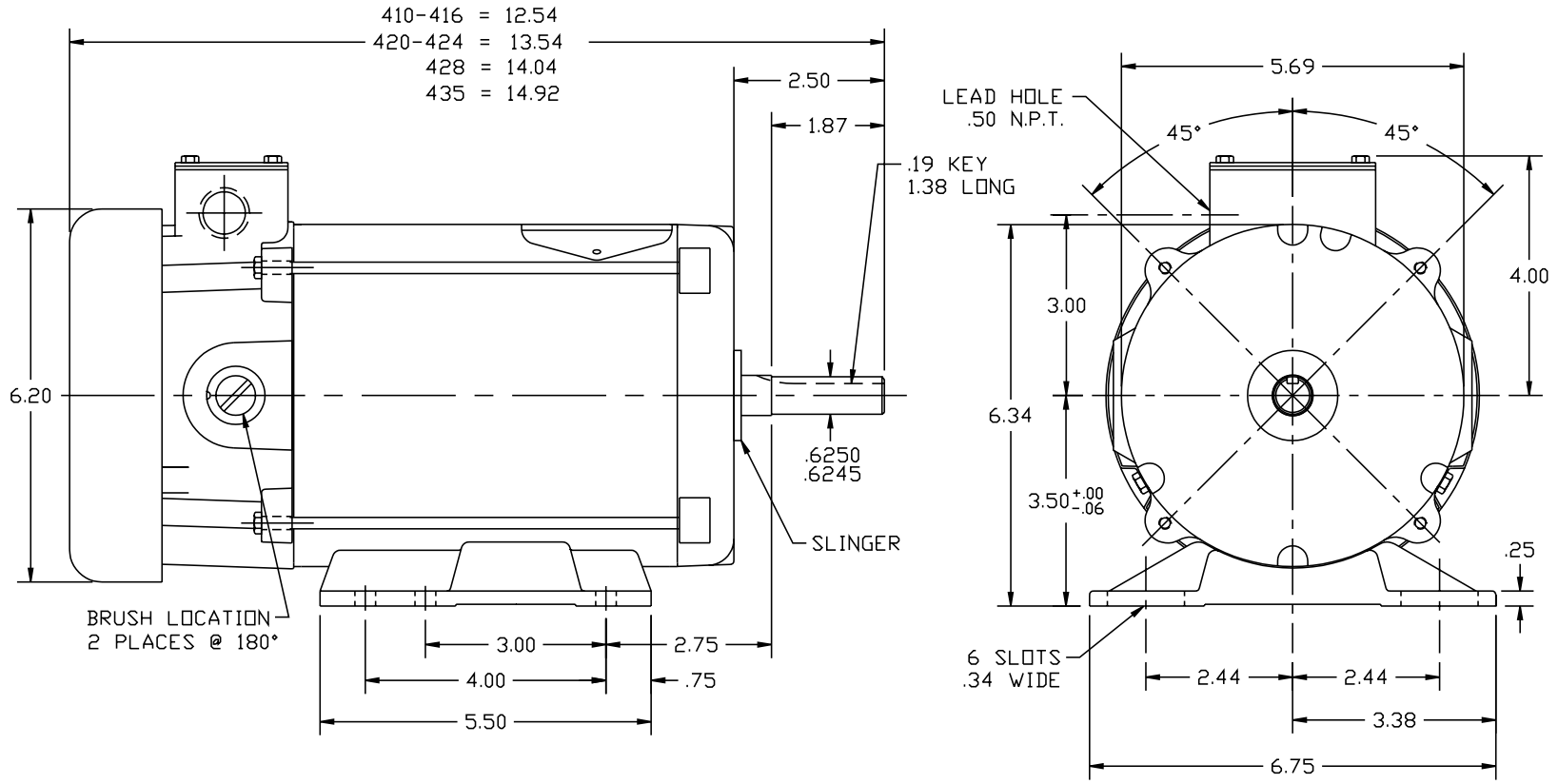

MATL: –				BALDOR ELECTRIC Co.
REV: D	LOADED TO ACAD			
34-6121	REF: 34-6099	BY: TDJ	REVISED: 08/09/95	STD. HORZ 34DC NEMA 56 TEFC S/P 14-2 WEATHERPROOF
	FILE: AAA00022425		TDR: 0064848	

34-6121

CD0862B01

COMPOUND WOUND

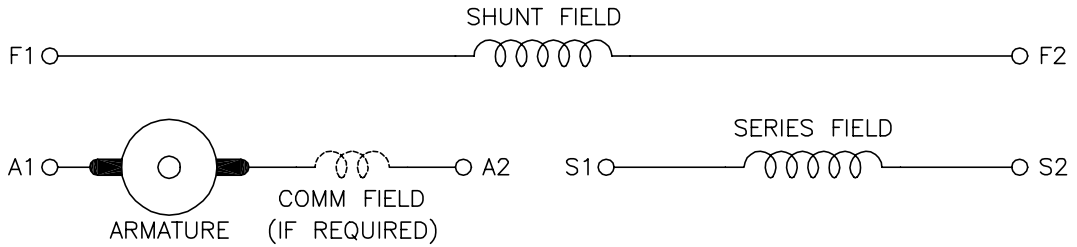

DIRECTION OF ROTATION			
CWDE		CCWDE	
POS TERM (+)	NEG TERM (−)	POS TERM (+)	NEG TERM (−)
A1	S2	A2	S2
F1	F2	F1	F2
CONNECT A2 & S1		CONNECT A1 & S1	

NOTES:

1. LIMIT STARTING INRUSH CURRENT TO NOT MORE THAN 3 TIMES RATED AMPERES BY ENERGIZING THE FULL SHUNT FIELD BEFORE BRINGING THE ARMATURE VOLTAGE UP SLOWLY OR IN STEPS.
2. OPTIONAL FIELD REOSTAT MAY BE CONNECTED IN SERIES WITH THE SHUNT FIELD.
3. OPTIONAL THERMOSTAT LEADS ARE MARKED J,J.

CD0862B01

REV. DESC: NEW, REPLACE CD0862				BALDOR ELECTRIC Co.
REV. LTR: –	BY: JLP	REVISED: 16:10:51 11/03/2004	TDR: 347796	
CD0862B01		FILE: AAA00121482	REF: CD0862B01	DC CONNECTION DIAGRAM, COMPOUND FIELD, 6 LEAD
		MTL: –		