BALDOR • RELIANCE

Product Information Packet

DMG2305

5KW,2500RPM,DC,1810AT,DPFG,TOD

Copyright © All product information within this document is subject to ABB Motors and Mechanical Inc. copyright © protection, unless otherwise noted.

Part Detail

Revision:	D	**Status:**	PRD/A	**Change #:**		**Proprietary:**	No
Type:	DC	**Prod. Type:**		**Elec. Spec:**		**CD Diagram:**	
Enclosure:	DPFG	**Mfg Plant:**		**Mech. Spec:**		**Layout:**	1486-2
Frame:		**Mounting:**		**Poles:**	00	**Created Date:**	02-17-2014
Base:		**Rotation:**	R	**Insulation:**		**Eff. Date:**	10-28-2016
Field Type:		**Literature:**		**Elec. Diagram:**		**Replaced By:**	

Specs

Enclosure:	DPFG		
Frame:	1810AT		
Frame Material:	Steel		
Agency Approvals:	CSA		
Base Indicator:	Rigid		
Bearing Grease Type:	No Grease		
Drip Cover:	No Drip Cover		
Feedback Device:	NO FEEDBACK		
Heater Indicator:	No Heater		
Insulation Class:	F		
Lifting Lugs:	Standard Lifting Lugs		
Shaft Extension Location:	Pulley End		
Shaft Ground Indicator:	No Shaft Grounding		
Shaft Slinger Indicator:	No Slinger		
Motor Standards:	IEC		

Nameplate 15405

CAT.NO.	DMG2305	**MODEL NO.**	T18R8004		
KW	5KW	**RPM**	2500	**FRAME**	1810AT
ARM VOLTS	230	**ARM AMPS**	21.70	**WOUND**	COMPOUND
FIELD VOLTS	230	**FIELD AMPS**	.62		
FIELD CONN.		**OHMS**	267.4	**INSUL. CLASS**	F
ENCL	DPFG	**DUTY**	CONT	**MAX AMBIENT**	40
SERVICE FACTOR	1.0				
S/N		**E/S**	K00006B		
O.D.E. BRG.	6205	**D.E. BRG.**	6206	**BRUSH**	18044-4

QTY 2

Parts List

Part Number	Description	Quantity
SA281192	SA T18R8004	1.000 EA
AA015360	AA T18R8004	1.000 EA
000613006NT	NAME PLATE IEC	1.000 EA
15405	ALUM CSA DC GENERATOR	1.000 EA
151128	LABEL DC GENERATOR CONN. & TERMINA	1.000 EA
MG1025N19	WILKOFAST, 778.50, RELIANCE BLUE-GREEN	0.100 GA
18010-3	ARM END LAM.	2.000 EA
032018004BK	HHCS 5/16-18X1/2 PLATED	2.000 EA
18017-1	BALANCE RING,STAMPING 7 GA (.188 THK)	2.000 EA
18416-1	FAN, MACH, 180 SERIES	1.000 EA
ME3002A06	COMMUTATOR ISOLATOR FOR 18043 COMM	1.000 EA
032018012CK	HHCS 3/8-16X1-1/2 PLTED	4.000 EA
032018012CK	HHCS 3/8-16X1-1/2 PLTED	4.000 EA
18040-3	INTERPOLE STACK	2.000 EA
424504003BA	SHIM PACKAGE	1.000 EA
424508002A	BALDOR ROUND DC FRAME INSULATION B/M	1.000 EA
032130008BA	5/16-18 X 1.0 HSHCS	4.000 EA
18032-9	DE BRKT MACH,FR 180 AT, DPFG, NO LUBE LI	1.000 EA
032130008BA	5/16-18 X 1.0 HSHCS	4.000 EA
15490	LIFTING LUG,180 FRAME	2.000 EA
18082-11	ODE BRKT MACH,FR 180,SPL FOR GENERATOR,S	1.000 EA
HA4048A05	DRIVE-IN PLUG,1.38"EXPAN.PLUG,	1.000 EA
HW5100A05	WVY WSHR F/205 & 304 BRGS	1.000 EA
032018004AK	HHCS 1/4-20X1/2 PLATED	2.000 EA

Parts List (continued)

Part Number	Description	Quantity
034000012AB	WSHR 1/4 STD. PLATED	2.000 EA
034017012AB	LCKW 1/4 STD. PLATED	2.000 EA
18006	BRUSH ROCKER ASSY FRAME 180SERIES	1.000 EA
18044-4SP	BRUSH,GR.E41,210 SER.SGL/CARBON #688K-01	2.000 EA
032018004AK	HHCS 1/4-20X1/2 PLATED	6.000 EA
150449-25	T BOX GRD STUD ARG 1/4 20 DIA. STUD	1.000 EA
18019	TERMINAL BOX COVER FRAME 180	1.000 EA
18020	BRUSH VENT COVER FR 18 SERIES #18 GA ST	1.000 EA
18020	BRUSH VENT COVER FR 18 SERIES #18 GA ST	1.000 EA
18026	GASKET,T BOX COVER,FR.1803/32 THK CORK/N	1.000 EA
18027	GASKET,ACCESS CVR,FR.180 3/32 THK DC205(	2.000 EA
WD4100A34	CAPLUG IN T-SERIES T12	1.000 EA
MG1025G05	WILKOFAST, 789.227, MED. GRAY CHAR. MET.	1.000 GA
034180011DA	1/4 SQ X 1.375 KEY	1.000 EA
PA1100	PACK FOR #1 SKID; CUSTOM	1.000 EA
MG5047	VARNISH 004824-001HM	0.400 GA
LB1171	LABEL CARTON 6X6 ON LINE BLANK	1.000 EA
482413008Y	#8 SLEEVING (GREEN)	6.000 FT
482413015Y	#15 SLVG	6.000 FT
482413009Y	#9 SLEEVING (GREEN)	6.000 FT
041009029E	#8 BUTT CONNECTOR	3.000 EA
041009029B	CONNECTOR, RTD	4.000 EA
041009029E	#8 BUTT CONNECTOR	3.000 EA
MN605	INTEGRAL HP DC MOTORS 2/09	1.000 EA

Accessories

Part Number	Description	Multiplier
90EP5000A02	C-FACE CONVERSION KIT FOR STOCK MTR,FR 1	

1486–2

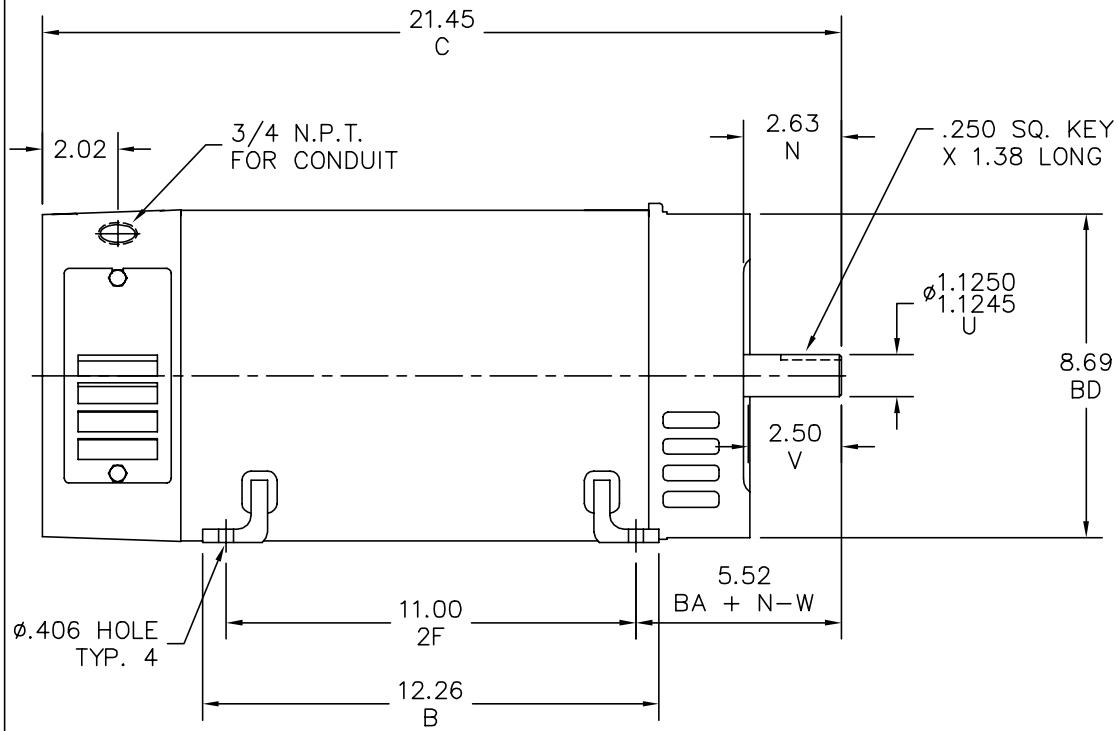

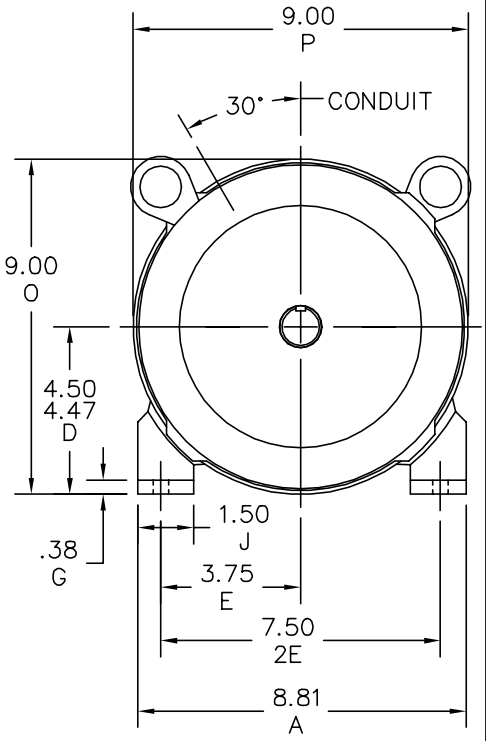

SHAFT RUNOUT .002 T.I.R. MAX.
"V" DIMENSION IS MAX. HUB LENGTH ON SHAFT.
APPROX. WEIGHT: 195 LB.
ALL DIMENSIONS NOT NOTED ARE NOMINAL DIMENSIONS
CONSULT FACTORY FOR TOLERANCES.

1486–2

CUSTOMER IS RESPONSIBLE FOR DETERMINING THAT BALDOR'S PRODUCT WILL PERFORM SUITABLY IN THE INTENDED APPLICATION.

REV. DESC: CHANGE KEYWAY FROM 1.75 TO 1.38 LONG			BALDOR • DODGE • RELIANCE
REV. LTR: B	VERSION: 02	TDR: 000000531849	
FILE: \RGG\00005\857		REVISED: 03:06:04 03/05/2010	1810AT,GENERATOR,DPFG
MTL: –		BY: RGGWT	SH 1 of 1

Marketing maintained PDF of MN605:

http://www.baldor.com/support/Literature/Load.ashx/MN605?ManNumber=MN605