BALDOR • RELIANCE

Product Information Packet

DMG2310

10KW,2500RPM,DC,219AT,DPFG,F2

Copyright © All product information within this document is subject to ABB Motors and Mechanical Inc. copyright © protection, unless otherwise noted.

Part Detail

Revision:	H	**Status:**	PRD/A	**Change #:**		**Proprietary:**	No
Type:	DC	**Prod. Type:**		**Elec. Spec:**		**CD Diagram:**	
Enclosure:		**Mfg Plant:**		**Mech. Spec:**		**Layout:**	1486
Frame:		**Mounting:**		**Poles:**	00	**Created Date:**	02-17-2014
Base:		**Rotation:**	R	**Insulation:**		**Eff. Date:**	03-21-2018
Field Type:		**Literature:**		**Elec. Diagram:**		**Replaced By:**	

Specs

Frame:	219T		
Frame Material:	Steel		
Agency Approvals:	CSA		
Base Indicator:	Rigid		
Bearing Grease Type:	No Grease		
Drip Cover:	No Drip Cover		
Feedback Device:	NO FEEDBACK		
Heater Indicator:	No Heater		
Insulation Class:	F		
Lifting Lugs:	Standard Lifting Lugs		
Shaft Extension Location:	Pulley End		
Shaft Ground Indicator:	No Shaft Grounding		
Shaft Slinger Indicator:	No Slinger		
Motor Standards:	IEC		

Nameplate 15405

CAT.NO.	DMG2310	**MODEL NO.**	T21R8001		
KW	10 KW	**RPM**	2500	**FRAME**	0219AT
ARM VOLTS	230	**ARM AMPS**	43.50	**WOUND**	COMPOUND
FIELD VOLTS	230	**FIELD AMPS**	.81		
FIELD CONN.		**OHMS**	188.5	**INSUL. CLASS**	F
ENCL	DPFG	**DUTY**	CONT	**MAX AMBIENT**	40
SERVICE FACTOR	1.0				
S/N		**E/S**	K00002A		
O.D.E. BRG.	6207	**D.E. BRG.**	6207	**BRUSH**	150986-21-1

QTY 2

Parts List

Part Number	Description	Quantity
SA281199	SA T21R8001	1.000 EA
AA015367	AA T21R8001	1.000 EA
000613006NT	NAME PLATE IEC	1.000 EA
15405	ALUM CSA DC GENERATOR	1.000 EA
151128	LABEL DC GENERATOR CONN. & TERMINA	1.000 EA
482403000ANA	LT GREEN PT MSDS#P3010	0.100 GA
21010-3	ARM END LAM.	2.000 EA
032018004BK	HHCS 5/16-18X1/2 PLATED	2.000 EA
032018004BK	HHCS 5/16-18X1/2 PLATED	2.000 EA
21013	FAN,INJ MOLDED,210 SERIESBLACK FIBERGLAS	1.000 EA
21016	BALANCE RING FR 21 SERIES	2.000 EA
034180050CA	KEY 3/16 SQ X 6.25	1.000 EA
032018014CK	HHCS 3/8-16X1-3/4L	4.000 EA
032018014CK	HHCS 3/8-16X1-3/4L	4.000 EA
21038-2	INTERPOLE STACK, FR 219	2.000 EA
424504006AA	SHIM PACKAGE	1.000 EA
424508100A	BALDOR ROUND DC FRAME INSULATION B/M	1.000 EA
034141137AA	SNAP RING	1.000 EA
15094	DISHED LOCKWASHER .332 ID, .865 OD	2.000 EA
032018032BK	HHCS 5/16-18X4"PLTD-250	4.000 EA
21073-8	FE BRKT MACH FR210 STANDARD FOR L	1.000 EA
HW5100A07	W2816-030 WVY WASHER (WB)	1.000 EA
032018004AK	HHCS 1/4-20X1/2 PLATED	4.000 EA
21090	TERM BOX HOLE COVER 1018 STEEL PLATE	1.000 EA

Parts List (continued)

Part Number	Description	Quantity
21091	GASKET TERM BOX FRAME 210	2.000 EA
032018048BK	5/16-18 X 6.00 HHCS	4.000 EA
032130016AA	HSHCS	2.000 EA
034690001AC	P/PLG	2.000 EA
21075-13	ODE BRKT MACH,FR 210,LOCKED ODE BRG,FOR	1.000 EA
HA4048A05	DRIVE-IN PLUG,1.38"EXPAN.PLUG,	1.000 EA
15094	DISHED LOCKWASHER .332 ID, .865 OD	2.000 EA
150986-21-1SP	BRUSH,210 FR. SERIES T563 NATIONAL	2.000 EA
21702-1	ROCKER RING ASSY FR 210 1 BRUSH PER BRU	1.000 EA
032018004AK	HHCS 1/4-20X1/2 PLATED	2.000 EA
032018004AK	HHCS 1/4-20X1/2 PLATED	28.000 EA
15029-1	TERM.BOX BASE FR-210 DUREX P/N:1DR	1.000 EA
15029-2	TERM.BOX COVER FR-210 DUREX P/N:D616	1.000 EA
15029-3	GASKET T BOX CVR,1/8 THK ARMSTRONG DC 20	1.000 EA
150449-25	T BOX GRD STUD ARG 1/4 20 DIA. STUD	1.000 EA
21079-1	GASKET,CVR,FAN END,FR.2103/32 THK DC205(	3.000 EA
21079-2	GASKET COVER CE FRAME 210	3.000 EA
21080-1	VENT COVER FR 21 SERIES	3.000 EA
21080-2	VENT COVER, FR 21 SERIES W-5.00	3.000 EA
MG1025G05	WILKOFAST, 789.227, MED. GRAY CHAR. MET.	1.000 GA
034180014EA	KEY 5/16X5/16X1-3/4L	1.000 EA
PA1100	PACK FOR #1 SKID; CUSTOM	1.000 EA
MG5047	VARNISH 004824-001HM	0.400 GA
LB1171	LABEL CARTON 6X6 ON LINE BLANK	1.000 EA

482413009Y	#9 SLEEVING (GREEN)	6.000 FT
482413015Y	#15 SLVG	6.000 FT
482413010Y	#10 SLEEVING (GREEN)	6.000 FT
041009029E	#8 BUTT CONNECTOR	3.000 EA
041009029B	CONNECTOR, RTD	4.000 EA
041009029D	12-10BUTT CONNECTOR 350 J	3.000 EA
MN605	INTEGRAL HP DC MOTORS 2/09	1.000 EA

Accessories

Part Number	Description	Multiplier
91EP5000A01	C-FACE CONVERSION KIT FOR STOCK MTR,FR 2	P1

1486

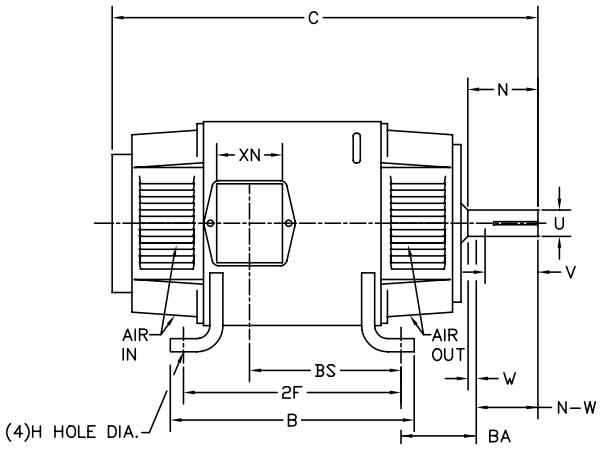

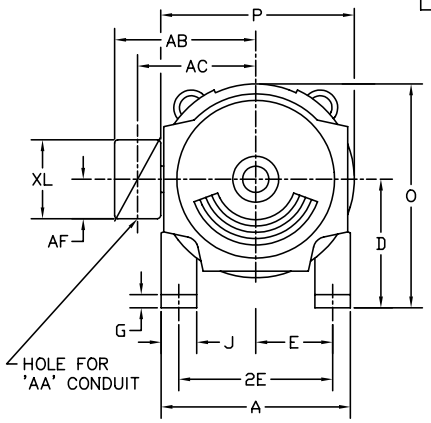

	FOOT MOUNTING						D.E. SHAFT EXTENSION					DRIVE KEY		FRAME					
FRAME	BA	E	2F	G	H	J	N	N-W	U	V	W	KEY-SQ.	KEY-LONG	A	B	C	D	O	P
1810AT	2.75	3.75	11.00	.38	.406	1.50	2.90	2.77	1.125 [1]	2.50 [3]	.13	.250	1.38	8.75	12.25	21.46	4.50 [2]	9.00	9.00
219AT	3.50	4.25	11.00	.50	.406	2.00	3.00	2.75	1.375 [1]	2.50 [3]	.25	.312	1.75	10.38	12.00	24.50	5.25 [2]	10.47	10.44
258AT	4.25	5.00	12.50	.69	.531	2.25	3.44	3.25	1.625 [1]	3.00 [3]	.19	.375	2.31	12.38	14.00	26.50	6.25 [2]	12.47	12.44
259AT	4.25	5.00	14.00	.69	.531	2.25	3.44	3.25	1.625 [1]	3.00 [3]	.19	.375	2.31	12.38	15.50	28.00	6.25 [2]	12.47	12.44
288AT	4.75	5.50	14.00	.69	.531	2.50	3.91	3.75	1.875 [1]	3.50 [3]	.16	.500	2.50	13.81	15.62	32.00	7.00 [2]	13.88	13.75
328AT	5.25	6.25	16.00	.81	.656	3.00	4.40	4.25	2.125 [1]	4.00 [3]	.15	.500	3.12	15.88	17.75	34.63	8.00 [2]	15.94	15.88
329AT	5.25	6.25	18.00	.81	.656	3.00	4.40	4.25	2.125 [1]	4.00 [3]	.15	.500	3.12	15.88	19.75	36.63	8.00 [2]	15.94	15.88

	CONDUIT BOX							APPROXIMATE WEIGHT
FRAME	AA	AB	AC	AF	BS	XL	XN	
1810AT	3/4NPT	INTEGRAL WITH ENDPLATE						195
219AT	3/4-1	7.91	6.44	2.44	9.38	3.81	3.12	260
258AT	1-1/4	9.35	7.72	2.94	9.75	4.94	4.00	366
259AT	1-1/4	9.35	7.72	2.94	11.25	4.94	4.00	411
288AT	1-1/4	11.88	9.25	5.00	12.64	7.88	5.25	566
328AT	2	12.94	10.32	5.00	13.68	7.88	5.25	775
329AT	2	12.94	10.32	5.00	15.68	7.88	5.25	884

1) SHAFT DIAMETERS TO 1.500 TOLERANCE +.0000 -.0005
SHAFT DIAMETERS ABOVE 1.500 TOLERANCE +.0000 -.0010
SHAFT DIAMETERS TO 1.625 RUNOUT .002 T.I.R. MAX.
SHAFT DIAMETERS ABOVE 1.625 RUNOUT .003 T.I.R. MAX.
2) 'D' DIMENSION TOLERANCE +.000 - .030
3) 'V' DIMENSION IS MAX. HUB LENGTH ON SHAFT
4) CONDUIT BOX CAN BE ROTATED IN 90° STEPS ON ITS OWN AXIS.
5) ALL DIMENSIONS NOT NOTED ARE NOMINAL DIMENSIONS CONSULT FACTORY FOR TOLERANCES.

FOR F1 OR F2 CONDUIT BOX LOCATION SEE SALES ORDER

1486

MATL: -

REV: C CORRECTED "A" DIMENSIONS

9841

SCALE: 0.08 BY: TBM REVISED: 09/10/96

FILE: CHB00003091 TDR: 0104915

BALDOR ELECTRIC Co.

DIM SHEET, 1810AT THRU 329AT GENERATORS