BALDOR • RELIANCE

Product Information Packet

DMG2320

20KW,1750RPM,DC,288AT,DPFG,F2

Copyright © All product information within this document is subject to ABB Motors and Mechanical Inc. copyright © protection, unless otherwise noted.

Part Detail

Revision:	E	**Status:**	PRD/A	**Change #:**		**Proprietary:**	No
Type:	DC	**Prod. Type:**		**Elec. Spec:**		**CD Diagram:**	
Enclosure:		**Mfg Plant:**		**Mech. Spec:**		**Layout:**	1486
Frame:		**Mounting:**	F2	**Poles:**	00	**Created Date:**	04-09-2015
Base:		**Rotation:**	PS	**Insulation:**		**Eff. Date:**	11-02-2017
Field Type:		**Literature:**		**Elec. Diagram:**		**Replaced By:**	

Specs

Frame:	288AT		
Frame Material:	Steel		
Agency Approvals:	CSA		
Base Indicator:	Rigid		
Bearing Grease Type:	No Grease		
Drip Cover:	No Drip Cover		
Feedback Device:	NO FEEDBACK		
Heater Indicator:	No Heater		
Insulation Class:	F		
Lifting Lugs:	Standard Lifting Lugs		
Mounting Arrangement:	F2		
Shaft Extension Location:	Pulley End		
Shaft Ground Indicator:	No Shaft Grounding		
Shaft Slinger Indicator:	No Slinger		
Motor Standards:	IEC		

Nameplate 15405

CAT.NO.	DMG2320	**MODEL NO.**	T28R8007		
KW	20KW	**RPM**	1750	**FRAME**	0288AT
ARM VOLTS	230	**ARM AMPS**	87.00	**WOUND**	COMPOUND
FIELD VOLTS	230	**FIELD AMPS**	1.80		
FIELD CONN.		**OHMS**	78.5	**INSUL. CLASS**	F
ENCL	DPFG	**DUTY**	CONT	**MAX AMBIENT**	40
SERVICE FACTOR	1.0				
S/N		**E/S**	K0076A		
O.D.E. BRG.	6209	**D.E. BRG.**	6210	**BRUSH**	28610-1

QTY 4

Parts List

Part Number	Description	Quantity
SA297073	SA T28R8007	1.000 EA
AA016124	AA T28R8007	1.000 EA
15405	ALUM CSA DC GENERATOR	1.000 EA
LB1009N	LABEL,ROTATION DIRECTION (ON ROLLS)	1.000 EA
151128	LABEL DC GENERATOR CONN. & TERMINA	1.000 EA
482403000ANA	LT GREEN PT MSDS#P3010	0.100 GA
034017016AB	LCKW 1/2" PLATED	8.000 EA
435360014	MWIRE 7 GA 004824-004BV	27.000 LB
15555-894	KEY 1/2 SQ	1.000 EA
611954052A	BAND SHL	1.000 EA
HA1085	ROTOR WASHER FOR 280 FRAME	1.000 EA
HA1085	ROTOR WASHER FOR 280 FRAME	1.000 EA
609848007A	NOMEX WASHER, ROUND DC 2POLE ODE	1.000 EA
032018004BK	HHCS 5/16-18X1/2 PLATED	2.000 EA
032018004BK	HHCS 5/16-18X1/2 PLATED	2.000 EA
15094	DISHED LOCKWASHER .332 ID, .865 OD	2.000 EA
28610-1SP	BRUSH,280/320FR. E-41HELWIG,NEW DESIGN	4.000 EA
BP5228R02	BRUSH ROCKER ASSY, FR 28/32 2 BR/STUD	1.000 EA
28026-1	FAN MACHINED FRAME 280 SERIES	1.000 EA
28347	BALANCE RING, H.R.P&O STL	2.000 EA
032018016DK	HHCS 1/2-13X2L PLTD.	4.000 EA
032018016DK	HHCS 1/2-13X2L PLTD.	4.000 EA
28037-1	INTERPOLE STACK FRAME 288	2.000 EA
424504011FB	FT. MILL 288 SHIM PACK	1.000 EA

Parts List (continued)

Part Number	Description	Quantity
424508201A	ROUND 288 DC FRAME INSUL BM	1.000 EA
032018038CK	HHCS 3/8X4-3/4 PLTD.	4.000 EA
28041-1	FE BRKT MACH FR280 FOR LOCKED C.E	1.000 EA
HW5100A10	W3519-038 WAVY WASHER, FOR 6308 BRG	1.000 EA
15599-37	DRIVE SCR,#10 X.37 TYPE UPLATED STEEL	6.000 EA
032130010CA	3/8-16 X 1.25 HSHCS	4.000 EA
032130016BA	HSHCS OUTER CAP LE	4.000 EA
034690001AC	P/PLG	2.000 EA
28040-7	ODE BRKT MACH FR 280,LOCKED ODE BRG.,GEN	1.000 EA
HA4048A01	DRIVE-IN PLUG,.50"EXPAN.PLUG,	2.000 EA
15094	DISHED LOCKWASHER .332 ID, .865 OD	2.000 EA
032018003BK	5/16-18 X .38 LG HCS	4.000 EA
032018004AK	HHCS 1/4-20X1/2 PLATED	2.000 EA
032018004BK	HHCS 5/16-18X1/2 PLATED	28.000 EA
032018008BK	HHCS 5/16-18X1L PLATED	4.000 EA
15024-3	TERM.BOX BASE FR-280 DUREX P/N:3CT	1.000 EA
15024-4	TERM.BOX CVR. FR-28,32,36DUREX P/N:D618	1.000 EA
15024-5	GASKET, T.BOX COVER	1.000 EA
15024-7	GASKET,T/BOX FR. 280/3201/8" THK.,MUELL	1.000 EA
150449-31	GRD STUD ARG .312DIA STUD	1.000 EA
15115	TERM BOX HOLE COVER FRAME 280 & 320	1.000 EA
28021-1	GASKET,CVR,FAN END,FR.2803/32 THK DC205(	3.000 EA
28021-2	GASKET COVER COM END FRAME 280 SERIES	3.000 EA
28022-1	VENT GUARD,WITH LOUVERS	1.000 EA

28045-1	SIDE VENT CVR W/LOUVERS 280 SERIES	3.000 EA
28045-2	SIDE VENT COVER W/LOUVERSFR.280 SERIES	3.000 EA
MG1025G05	WILKOFAST, 789.227, MED. GRAY CHAR. MET.	1.000 GA
034180020GA	KEY 1/2X1/2X2-1/2 L	1.000 EA
PA1100	PACK FOR #1 SKID; CUSTOM	1.000 EA
MG5047	VARNISH 004824-001HM	0.400 GA
041009029A	#2 BUTT CONNECTOR 350 J	4.000 EA
041009029C	16-14 BUTT CONNECTOR	2.000 EA
482413015Y	#15 SLVG	6.000 FT
482413006Y	#6 SLEEVING (GREEN)	6.000 FT
482413007Y	#7 SLEEVING (GREEN)	6.000 FT

Accessories

Part Number	Description	Multiplier
93EP5000A02	C-FACE CONVERSION KIT FOR STOCK MTR,FR 2	

1486

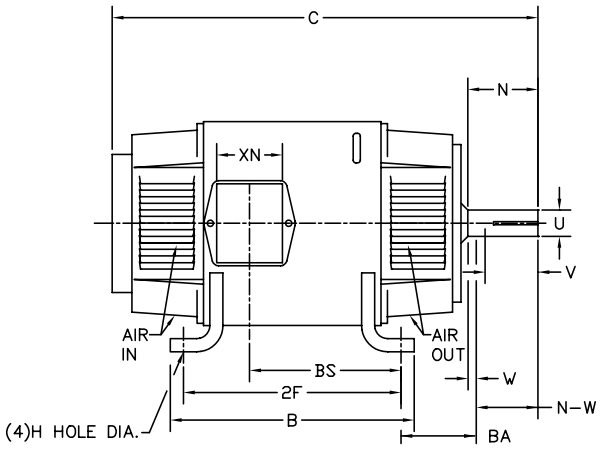

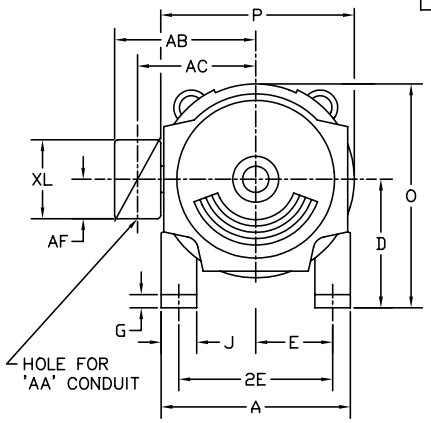

	FOOT MOUNTING						D.E. SHAFT EXTENSION					DRIVE KEY		FRAME					
FRAME	BA	E	2F	G	H	J	N	N-W	U	V	W	KEY-SQ.	KEY-LONG	A	B	C	D	O	P
1810AT	2.75	3.75	11.00	.38	.406	1.50	2.90	2.77	1.125 [1]	2.50 [3]	.13	.250	1.38	8.75	12.25	21.46	4.50 [2]	9.00	9.00
219AT	3.50	4.25	11.00	.50	.406	2.00	3.00	2.75	1.375 [1]	2.50 [3]	.25	.312	1.75	10.38	12.00	24.50	5.25 [2]	10.47	10.44
258AT	4.25	5.00	12.50	.69	.531	2.25	3.44	3.25	1.625 [1]	3.00 [3]	.19	.375	2.31	12.38	14.00	26.50	6.25 [2]	12.47	12.44
259AT	4.25	5.00	14.00	.69	.531	2.25	3.44	3.25	1.625 [1]	3.00 [3]	.19	.375	2.31	12.38	15.50	28.00	6.25 [2]	12.47	12.44
288AT	4.75	5.50	14.00	.69	.531	2.50	3.91	3.75	1.875 [1]	3.50 [3]	.16	.500	2.50	13.81	15.62	32.00	7.00 [2]	13.88	13.75
328AT	5.25	6.25	16.00	.81	.656	3.00	4.40	4.25	2.125 [1]	4.00 [3]	.15	.500	3.12	15.88	17.75	34.63	8.00 [2]	15.94	15.88
329AT	5.25	6.25	18.00	.81	.656	3.00	4.40	4.25	2.125 [1]	4.00 [3]	.15	.500	3.12	15.88	19.75	36.63	8.00 [2]	15.94	15.88

	CONDUIT BOX							APPROXIMATE WEIGHT
FRAME	AA	AB	AC	AF	BS	XL	XN	
1810AT	3/4NPT	INTEGRAL WITH ENDPLATE						195
219AT	3/4-1	7.91	6.44	2.44	9.38	3.81	3.12	260
258AT	1-1/4	9.35	7.72	2.94	9.75	4.94	4.00	366
259AT	1-1/4	9.35	7.72	2.94	11.25	4.94	4.00	411
288AT	1-1/4	11.88	9.25	5.00	12.64	7.88	5.25	566
328AT	2	12.94	10.32	5.00	13.68	7.88	5.25	775
329AT	2	12.94	10.32	5.00	15.68	7.88	5.25	884

1) SHAFT DIAMETERS TO 1.500 TOLERANCE +.0000 -.0005
SHAFT DIAMETERS ABOVE 1.500 TOLERANCE +.0000 -.0010
SHAFT DIAMETERS TO 1.625 RUNOUT .002 T.I.R. MAX.
SHAFT DIAMETERS ABOVE 1.625 RUNOUT .003 T.I.R. MAX.
2) 'D' DIMENSION TOLERANCE +.000 - .030
3) 'V' DIMENSION IS MAX. HUB LENGTH ON SHAFT
4) CONDUIT BOX CAN BE ROTATED IN 90° STEPS ON ITS OWN AXIS.
5) ALL DIMENSIONS NOT NOTED ARE NOMINAL DIMENSIONS CONSULT FACTORY FOR TOLERANCES.

FOR F1 OR F2 CONDUIT BOX LOCATION SEE SALES ORDER

1486

MATL: -

REV: C CORRECTED "A" DIMENSIONS

9841

SCALE: 0.08 BY: TBM REVISED: 09/10/96

FILE: CHB00003091 TDR: 0104915

BALDOR ELECTRIC Co.

DIM SHEET, 1810AT THRU 329AT GENERATORS

Marketing maintained PDF of MN605:

http://www.baldor.com/support/Literature/Load.ashx/MN605?ManNumber=MN605