BALDOR • RELIANCE

Product Information Packet

DMG2325

25KW/1750RPM/DC/DPFG/NEMA 328AT

Copyright © All product information within this document is subject to ABB Motors and Mechanical Inc. copyright © protection, unless otherwise noted.

Part Detail

Revision:	G	**Status:**	PRD/A	**Change #:**		**Proprietary:**	No
Type:	DC	**Prod. Type:**		**Elec. Spec:**		**CD Diagram:**	
Enclosure:		**Mfg Plant:**		**Mech. Spec:**		**Layout:**	1486
Frame:		**Mounting:**	F2	**Poles:**	00	**Created Date:**	04-09-2015
Base:		**Rotation:**	R	**Insulation:**		**Eff. Date:**	06-07-2018
Field Type:		**Literature:**		**Elec. Diagram:**		**Replaced By:**	

Specs

Frame:	328AT		
Frame Material:	Steel		
Agency Approvals:	CSA		
Base Indicator:	Rigid		
Bearing Grease Type:	No Grease		
Drip Cover:	No Drip Cover		
Feedback Device:	NO FEEDBACK		
Heater Indicator:	No Heater		
Insulation Class:	F		
Lifting Lugs:	Standard Lifting Lugs		
Mounting Arrangement:	F2		
Shaft Extension Location:	Pulley End		
Shaft Ground Indicator:	No Shaft Grounding		
Shaft Slinger Indicator:	No Slinger		
Motor Standards:	IEC		

Nameplate 15405

CAT.NO.	DMG2325	**MODEL NO.**	T32R8011		
KW	25KW	**RPM**	1750	**FRAME**	328AT
ARM VOLTS	230	**ARM AMPS**	109.00	**WOUND**	COMPOUND
FIELD VOLTS	230	**FIELD AMPS**	2.13		
FIELD CONN.		**OHMS**	76.0	**INSUL. CLASS**	F
ENCL	DPFG	**DUTY**	CONT	**MAX AMBIENT**	40
SERVICE FACTOR	1.0				
S/N		**E/S**	K0086A		
O.D.E. BRG.	6210	**D.E. BRG.**	6211	**BRUSH**	28610-1

QTY 4

Parts List

Part Number	Description	Quantity
SA297039	SA T32R8011	1.000 EA
AA016090	AA T32R8011	1.000 EA
15405	ALUM CSA DC GENERATOR	1.000 EA
LB1009N	LABEL,ROTATION DIRECTION (ON ROLLS)	1.000 EA
151128	LABEL DC GENERATOR CONN. & TERMINA	1.000 EA
482403000ANA	LT GREEN PT MSDS#P3010	0.200 GA
435360008	MWIRE 4 GA 004824-004BV	40.000 LB
15555-994	KEY 1/2 SQ	1.000 EA
32016-1	ROTOR WASHER, FR 329, SPL W/409 SLOT LAM	1.000 EA
32016-1	ROTOR WASHER, FR 329, SPL W/409 SLOT LAM	1.000 EA
32659	COMM HUB MACH-FR328, 1 OR 2 BR	1.000 EA
611956007A	(018) BANDSHELF 320	1.000 EA
15094	DISHED LOCKWASHER .332 ID, .865 OD	2.000 EA
28610-1SP	BRUSH,280/320FR. E-41HELWIG,NEW DESIGN	4.000 EA
BP5228R02	BRUSH ROCKER ASSY, FR 28/32 2 BR/STUD	1.000 EA
032018004AK	HHCS 1/4-20X1/2 PLATED	2.000 EA
032018004BK	HHCS 5/16-18X1/2 PLATED	28.000 EA
032018004BK	HHCS 5/16-18X1/2 PLATED	3.000 EA
609848007A	NOMEX WASHER, ROUND DC 2POLE ODE	1.000 EA
32024-1	FAN MACH,STD,320 SERIES INTERNAL FAN	1.000 EA
HA1086	BALANCING RING FOR 320 FRAME	2.000 EA
032018018DK	HHCS 1/2-13X2-1/4 PLTD.	4.000 EA
032018018DK	HHCS 1/2-13X2-1/4 PLTD.	4.000 EA
32035-1	INTERPOLE STACK	2.000 EA

Parts List (continued)

Part Number	Description	Quantity
424504013CD	FT. MILL 320 SHIM PACK	1.000 EA
424508251A	ROUND 328 DC FRAME INSUL BM	1.000 EA
032018040DK	HHCS 1/2-13X5L PLATED	4.000 EA
15033-11	WASHER WAVE SPR #042 ASSOC. SPR. #W3917-	1.000 EA
32029-10	FE BRKT,STD. LOCKED C/E 320AT	1.000 EA
15599-37	DRIVE SCR,#10 X.37 TYPE UPLATED STEEL	6.000 EA
032130010DA	1/2-13 X 1.25 HSHCS	4.000 EA
032130016BA	HSHCS OUTER CAP LE	3.000 EA
034690001AC	P/PLG	2.000 EA
32031-7	ODE BRKT MACH FR 320, LOCKED ODE BRG	1.000 EA
HA4048A01	DRIVE-IN PLUG,.50"EXPAN.PLUG,	2.000 EA
HA4048A04	DRIVE-IN PLUG,1.88"EXPAN.PLUG,	1.000 EA
032018004BK	HHCS 5/16-18X1/2 PLATED	2.000 EA
15094	DISHED LOCKWASHER .332 ID, .865 OD	2.000 EA
15024-4	TERM.BOX CVR. FR-28,32,36DUREX P/N:D618	1.000 EA
15024-5	GASKET, T.BOX COVER	1.000 EA
15024-6	TERM.BOX BASE FR-320, DUREX P/N:3SP	1.000 EA
15024-7	GASKET,T/BOX FR. 280/3201/8" THK.,MUELL	2.000 EA
150449-31	GRD STUD ARG .312DIA STUD	1.000 EA
15115	TERM BOX HOLE COVER FRAME 280 & 320	1.000 EA
32020-1	GASKET, COVER, FAN END	3.000 EA
32020-2	GASKET COVER COM END FRAME 320 SERIES	3.000 EA
32023-1	LOUVERED SMILE COVER, FR 320	1.000 EA
32046-1	VENT COVER FRAME 32 SERIES	3.000 EA

32046-2	VENT COVER FRAME 32 SERIES	3.000 EA
MG1025G05	WILKOFAST, 789.227, MED. GRAY CHAR. MET.	1.000 GA
034180025GA	KEY,DE	1.000 EA
PA1100	PACK FOR #1 SKID; CUSTOM	1.000 EA
MG5047	VARNISH 004824-001HM	0.400 GA
041009038G	TERMINAL LUG	4.000 EA
041009038B	TERMINAL LUG	2.000 EA
482413015Y	#15 SLVG	6.000 FT
482413004Y	#4 SLEEVING (GREEN) PER FT	6.000 FT
482413003Y	#3 SLEEVING (GREEN)	6.000 FT

Accessories

Part Number	Description	Multiplier
94EP5000A02	C-FACE CONVERSION KIT FOR STOCK MTR,FR 3	P1

1486

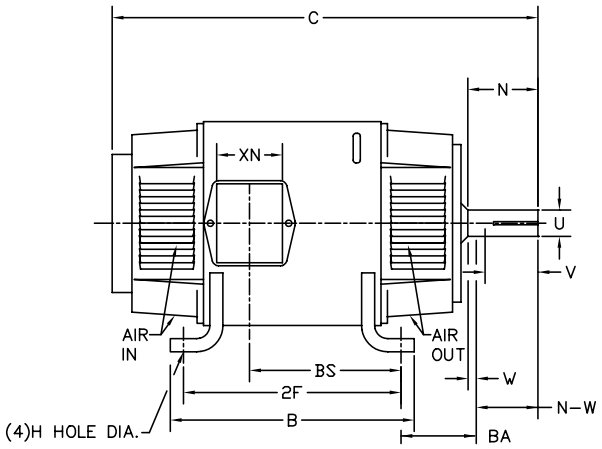

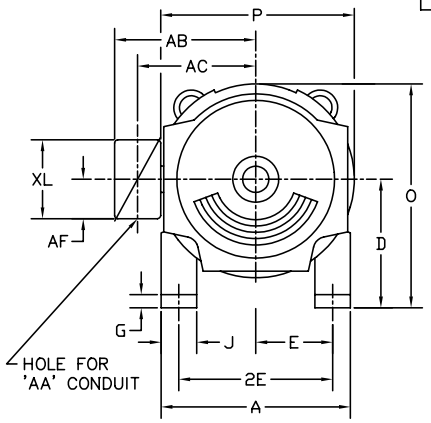

	FOOT MOUNTING						D.E. SHAFT EXTENSION					DRIVE KEY		FRAME					
FRAME	BA	E	2F	G	H	J	N	N-W	U	V	W	KEY-SQ.	KEY-LONG	A	B	C	D	O	P
1810AT	2.75	3.75	11.00	.38	.406	1.50	2.90	2.77	1.125 [1]	2.50 [3]	.13	.250	1.38	8.75	12.25	21.46	4.50 [2]	9.00	9.00
219AT	3.50	4.25	11.00	.50	.406	2.00	3.00	2.75	1.375 [1]	2.50 [3]	.25	.312	1.75	10.38	12.00	24.50	5.25 [2]	10.47	10.44
258AT	4.25	5.00	12.50	.69	.531	2.25	3.44	3.25	1.625 [1]	3.00 [3]	.19	.375	2.31	12.38	14.00	26.50	6.25 [2]	12.47	12.44
259AT	4.25	5.00	14.00	.69	.531	2.25	3.44	3.25	1.625 [1]	3.00 [3]	.19	.375	2.31	12.38	15.50	28.00	6.25 [2]	12.47	12.44
288AT	4.75	5.50	14.00	.69	.531	2.50	3.91	3.75	1.875 [1]	3.50 [3]	.16	.500	2.50	13.81	15.62	32.00	7.00 [2]	13.88	13.75
328AT	5.25	6.25	16.00	.81	.656	3.00	4.40	4.25	2.125 [1]	4.00 [3]	.15	.500	3.12	15.88	17.75	34.63	8.00 [2]	15.94	15.88
329AT	5.25	6.25	18.00	.81	.656	3.00	4.40	4.25	2.125 [1]	4.00 [3]	.15	.500	3.12	15.88	19.75	36.63	8.00 [2]	15.94	15.88

	CONDUIT BOX							APPROXIMATE WEIGHT
FRAME	AA	AB	AC	AF	BS	XL	XN	
1810AT	3/4NPT	INTEGRAL WITH ENDPLATE						195
219AT	3/4-1	7.91	6.44	2.44	9.38	3.81	3.12	260
258AT	1-1/4	9.35	7.72	2.94	9.75	4.94	4.00	366
259AT	1-1/4	9.35	7.72	2.94	11.25	4.94	4.00	411
288AT	1-1/4	11.88	9.25	5.00	12.64	7.88	5.25	566
328AT	2	12.94	10.32	5.00	13.68	7.88	5.25	775
329AT	2	12.94	10.32	5.00	15.68	7.88	5.25	884

1) SHAFT DIAMETERS TO 1.500 TOLERANCE +.0000 -.0005
   SHAFT DIAMETERS ABOVE 1.500 TOLERANCE +.0000 -.0010
   SHAFT DIAMETERS TO 1.625 RUNOUT .002 T.I.R. MAX.
   SHAFT DIAMETERS ABOVE 1.625 RUNOUT .003 T.I.R. MAX.
2) 'D' DIMENSION TOLERANCE +.000 - .030
3) 'V' DIMENSION IS MAX. HUB LENGTH ON SHAFT
4) CONDUIT BOX CAN BE ROTATED IN 90° STEPS ON ITS OWN AXIS.
5) ALL DIMENSIONS NOT NOTED ARE NOMINAL DIMENSIONS CONSULT FACTORY FOR TOLERANCES.

FOR F1 OR F2 CONDUIT BOX LOCATION SEE SALES ORDER

MATL: -

REV: C CORRECTED "A" DIMENSIONS

9841

SCALE: 0.08 BY: TBM REVISED: 09/10/96

FILE: CHB00003091 TDR: 0104915

BALDOR ELECTRIC Co.

DIM SHEET, 1810AT THRU 329AT GENERATORS

1486

Marketing maintained PDF of MN605:

http://www.baldor.com/support/Literature/Load.ashx/MN605?ManNumber=MN605