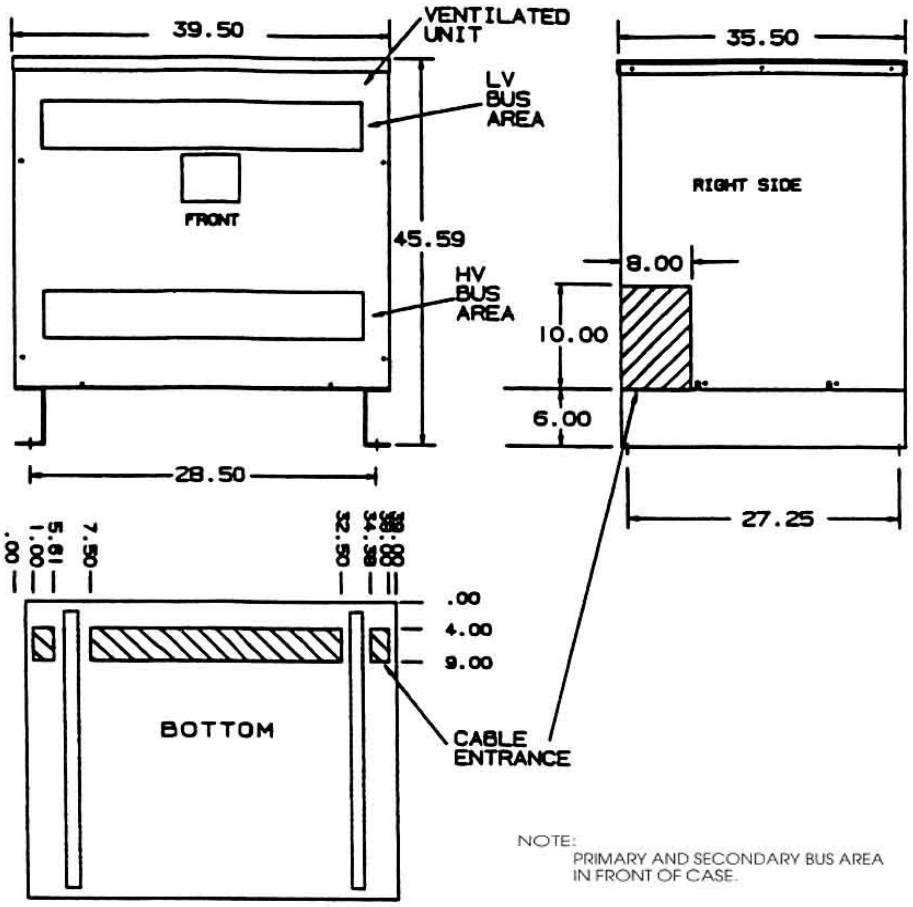


NOTE:
PRIMARY AND SECONDARY BUS AREA IN FRONT OF CASE.

KEY: DENOTES CONDUIT AREAS

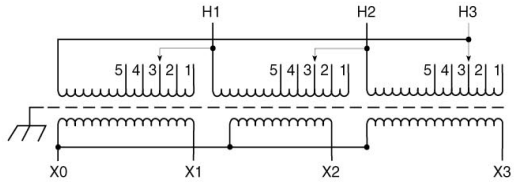


| Primary Volts | % | Connect Leads to Tap No. |
|---|---|---|
| 604 | 105 | 1 |
| 589 | 102.5 | 2 |
| 575 | 100 | 3 |
| 561 | 97.5 | 4 |
| 546 | 95 | 5 |
| **Secondary Volts** | | |
| 460 | | X1, X2, X3 |
| 266<br>1 phase | | X1 & X0<br>X2 & X0<br>X3 & X0 |

| KVA | CATALOG NUMBER | VOLTAGE | | WEATHER SHIELD | WEIGHT | PHASE | FREQ. |
|---|---|---|---|---|---|---|---|
| | | HIGH | LOW | | | | |
| 275 | **DTHB-00275-4S** | 575Δ | 460Y/266 | WS-A-5 | 1565 Lbs | 3ϕ | 60 Hz |

TYPICAL PERFORMANCE DATA

| | |
|---|---|
| Winding Rise | 150°C |
| Insulation | 220°C |
| Sound Level | 55 dB |

| | |
|---|---|
| Windings | AL |
| Standards: | UL/CSA |

| | |
|---|---|
| Impedance | 5.53% |
| | |

| | |
|---|---|
| Typical Efficiency | |
| No Load Losses | |
| Full Load Losses | |

## Revisions

Acme Electric®

Type No.

DRAWN

CHK.

MAT'L | APP.

FINISH

SCALE

SHEET

| | | | | | | | | |
|---|---|---|---|---|---|---|---|---|
| | | | | | A | PRINTS TO | CONTROL 7 | A |