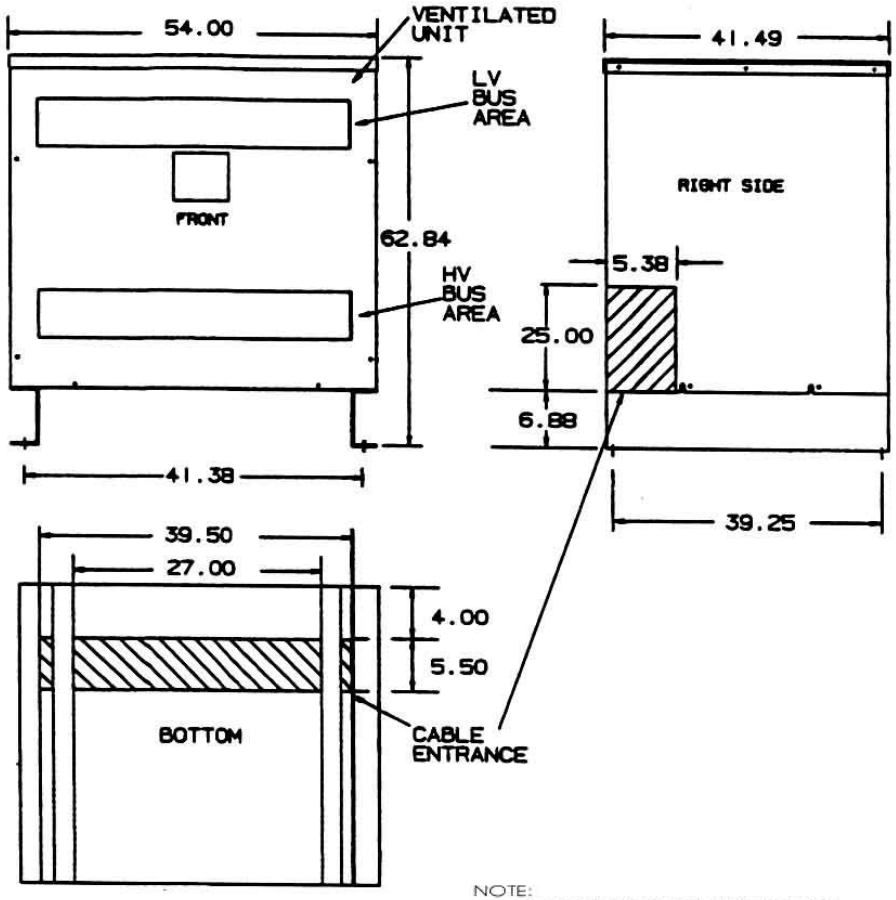

NOTE:
PRIMARY AND SECONDARY BUS AREA IN FRONT OF CASE.

KEY: DENOTES CONDUIT AREAS

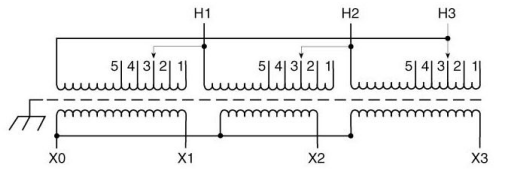

Primary Volts	%	Connect Leads to Tap No.
604	105	1
589	102.5	2
575	100	3
561	97.5	4
546	95	5
Secondary Volts		
460		X1, X2, X3
266 1 phase		X1 & X0 X2 & X0 X3 & X0

KVA	CATALOG NUMBER	VOLTAGE		WEATHER SHIELD	WEIGHT	PHASE	FREQ.
		HIGH	LOW				
660	**DTHB-00660-4S**	575Δ	460Y/266	WS-A-6	3700 Lbs	3ϕ	60 Hz

Winding Rise:	150°C
Insulation:	220°C
Sound Level:	65db

TYPICAL PERFORMANCE DATA

Regulation @ 100% PF:	2.08%
Standards:	UL/CSA

Windings:	AL
Impedance:	5.10%

Typical Efficiency:	98.83%
No Load Losses:	1,611 W
Full Load Losses:	13,985 W

Revisions

Acme Electric®

Type No.

DRAWN:

DATE: November 26, 2012

CASE 6

		Control 7	A